DIST	COUNTY	ROUTE	KILOMETER POST TOTAL PROJECT	SHEET No	TOTAL SHEETS
04	SF	80	13.2/13.9	102 S3	1204

REGISTERED ELECTRICAL ENGINEER 07/20/11 DATE

PLANS APPROVAL DATE

REGISTERED PROFESSIONAL ENGINEER LAWRENCE M. JOHNSON No. C 44006 Exp. 6-30-13 CIVIL STATE OF CALIFORNIA

PB AMERICAS, Inc.
A Parsons Brinckerhoff Company
303 Second St., Suite 700N
San Francisco, CA 94107-1317

The State of California or its officers or agents shall not be responsible for the accuracy or completeness of electronic copies of this plan sheet.

Caltrans now has a web site! To get to the web site, go to http://www.dot.ca.gov

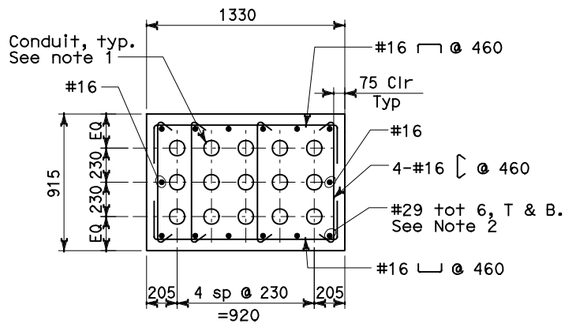

DETAIL 1
SCALE: 1:20

Note:
For Detail not noted or shown
see Section T-T on sheet E-19

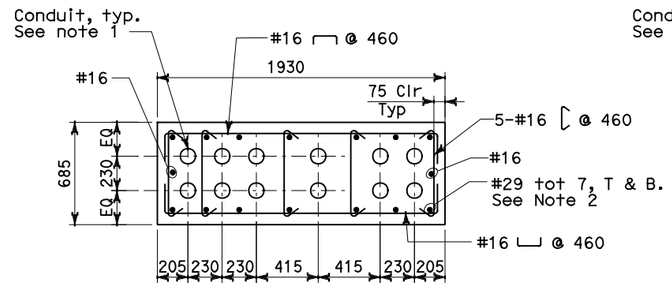

DETAIL 2
SCALE: 1:20

Note:
For Detail not noted or shown
see Section U-U on sheet E-19

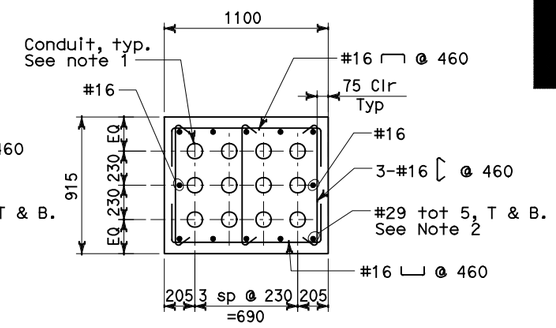

DETAIL 3
SCALE: 1:20

Note:
For Detail not noted or shown
see Section V-V on sheet E-19

NOTES:

1. For conduit duct bank sections, see sheet E-19, E-19A, E-19B and E-19C.
2. Where duct banks intersect, develop #29 top and bottom reinforcing a minimum distance of 1525 mm into adjacent duct bank.
3. The duct bank concrete compression strength at 28 days: f'c = 25 MPa.
4. The duct bank reinforcing bar yield strength: Fy = 414 MPa.
5. The duct bank have been designed for a maximum point load of 1330 kN distributed over a 1000mm x 1000mm area at the finished grade elevation.

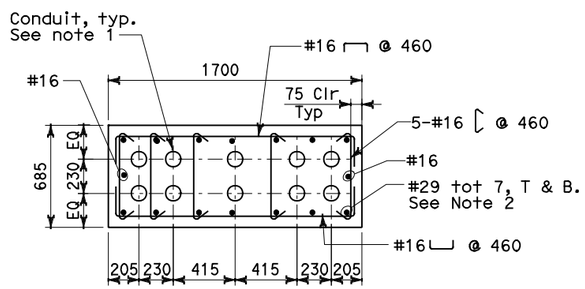

DETAIL 4
SCALE: 1:20

Note:
For Detail not noted or shown
see Section W-W on sheet E-19

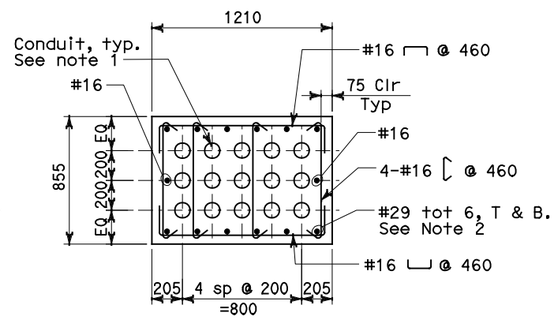

DETAIL 5
SCALE: 1:20

Notes:
A. For Detail not noted or shown
see Section X-X on sheet E-19
B. Locate 1st stirrup 75mm from
face of pier.

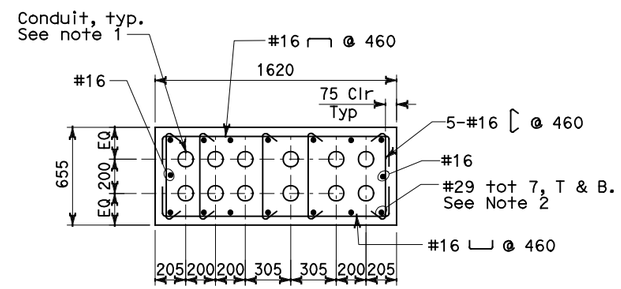

DETAIL 6
SCALE: 1:20

Notes:
A. For Detail not noted or shown
see Section X-X on sheet E-19
B. Locate 1st stirrup 75mm from
face of pier.

REQUEST FOR INFORMATION NOT ADDRESSED IN THIS CCO REMAIN IN FORCE

MARK	DATE	DESCRIPTIONS	BY	CH'D	CCO#
0	08/08/11	W2 DUCT BANKS REINFORCEMENT	LJ	RG	205

REVISIONS

CONTRACT CHANGE ORDER NO._____
SHEET_____ OF_____

DETAILS
UNDERGROUND DUCT BANK SECTIONS
SCALE AS NOTED

E-19C

REVISED BY	DATE REVISED
LJ	07/11

CALCULATED/DESIGNED BY: LJ
CHECKED BY:

DESIGN OVERSIGHT: BEHZAD GOLEMOHAMMADI

STATE OF CALIFORNIA - DEPARTMENT OF TRANSPORTATION
Caltrans

THIS PLAN ACCURATE FOR ELECTRICAL WORK ONLY.

ALL DIMENSIONS IN MILLIMETERS UNLESS OTHERWISE SHOWN

FOR REDUCED PLANS ORIGINAL SCALE IS IN MILLIMETERS 0 20 40 60 80

DGN FILE =>04-0120f1_0102S03.dgn
USERNAME =>llorico

CU 04251 EA 0120F1

LAST REVISION 00-00-00
DATE PLOTTED => 09-AUG-2011
TIME PLOTTED => 13:46