REQUEST FOR INFORMATION NOT ADDRESSED IN THIS CCO REMAIN IN FORCE					
2	4/5/12	W2 DUCT BANKS REINFORCEMENT	MG	RG	205
1	08/08/11	W2 DUCT BANKS REINFORCEMENT	MG	RG	205
MARK	DATE	DESCRIPTIONS	BY	CH'D	CCO#
		REVISIONS			

CONTRACT CHANGE ORDER NO. 205
SHEET 2 OF 21

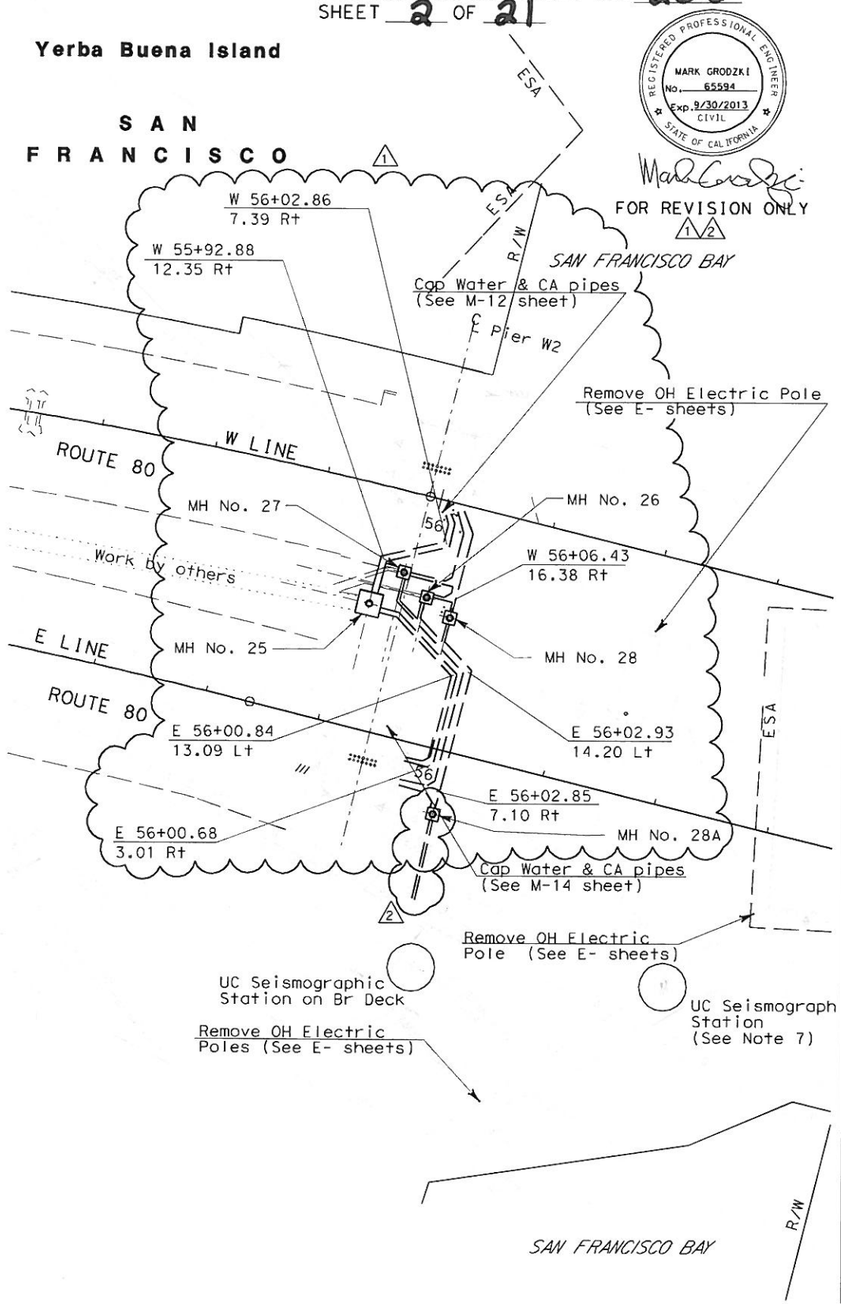

Existing buried miscellaneous items

Ref. No.	Station	Offset	Elevation	Description
1	E 55+74.606	34.379 Lt	19.620	Guy Wire Anchor
2	E 55+82.741	33.894 Lt	19.744	Guy Wire Anchor
3	E 55+92.631	32.741 Lt	19.881	Guy Wire Anchor
4	E 55+95.582	32.510 Lt	19.914	Guy Wire Anchor
5	E 55+74.951	12.560 Lt	20.417	Guy Wire Anchor
6	E 55+77.404	12.011 Lt	20.394	Guy Wire Anchor
7	E 56+01.638	7.525 Lt	20.704	Guy Wire Anchor
8	E 56+06.946	9.497 Lt	20.595	Guy Wire Anchor
9	E 56+03.665	7.181 Lt	20.712	South Tie-Back Anchor
10	E 56+02.966	7.161 Lt	20.695	South Tie-Back Anchor
11	E 55+89.163	7.646 Lt	20.420	South Tower Deadman
12	E 55+83.101	8.683 Lt	20.481	South Tie-Back Anchor
13	E 55+81.420	8.631 Lt	20.302	South Tie-Back Anchor
14	E 55+77.338	8.877 Lt	20.341	South Tie-Back Anchor
15	E 55+77.156	8.300 Lt	20.335	South Tie-Back Anchor
16	E 55+76.685	9.622 Lt	20.286	South Tie-Back Anchor
17	E 55+77.027	10.606 Lt	20.361	South Tie-Back Anchor
18	E 55+99.702	31.990 Lt	20.073	North Tie-Back Anchor
19	E 56+01.415	32.569 Lt	19.869	North Tie-Back Anchor
20	E 55+96.130	31.842 Lt	20.044	North Tie-Back Anchor
21	E 55+96.843	21.157 Rt	21.247	Guy Wire Anchor
22	E 55+81.770	18.677 Rt	20.689	Guy Wire Anchor
23	E 55+93.617	15.117 Rt	20.882	Guy Wire Anchor
24	E 55+77.764	12.157 Rt	20.319	Guy Wire Anchor
25	E 56+00.651	2.143 Lt	20.601	Guy Wire Anchor
26	E 55+84.798	5.103 Lt	20.32	Guy Wire Anchor
27	E 55+99.407	25.467 Rt	21.495	Guy Wire Anchor
28	E 55+95.401	18.967 Rt	21.084	Guy Wire Anchor
29	E 55+77.944	21.947 Rt	20.71	Guy Wire Anchor
30	E 55+73.947	15.437 Rt	20.341	Guy Wire Anchor
31	E 56+03.978	5.423 Lt	20.552	Guy Wire Anchor
32	E 56+00.472	11.933 Lt	20.491	Guy Wire Anchor
33	E 55+79.008	15.413 Lt	20.338	Guy Wire Anchor
34	E 55+93.822	20.677 Rt	21.107	Guy Wire Anchor
35	E 55+98.497	15.117 Rt	21.019	Guy Wire Anchor
36	E 55+76.029	16.767 Rt	20.452	Guy Wire Anchor
37	E 55+79.104	11.287 Rt	20.322	Guy Wire Anchor
38	E 55+99.312	0.773 Lt	20.62	Guy Wire Anchor
39	E 55+79.918	5.103 Lt	20.265	Guy Wire Anchor
40	E 55+84.593	10.663 Lt	20.356	Guy Wire Anchor
41	E 55+96.726	24.787 Rt	21.41	Guy Wire Anchor
42	E 56+00.720	18.277 Rt	21.225	Guy Wire Anchor
43	E 55+71.681	19.297 Rt	20.42	Guy Wire Anchor
44	E 55+75.675	12.777 Rt	20.284	Guy Wire Anchor
45	E 56+02.740	2.763 Lt	20.594	Guy Wire Anchor
46	E 56+06.734	9.283 Lt	20.532	Guy Wire Anchor
47	E 55+81.689	14.773 Lt	20.351	Guy Wire Anchor
48	E 55+79.222	31.188 Lt	20.066	Guy Wire Anchor
49	E 55+93.407	36.398 Lt	18.081	Guy Wire Anchor
50	E 55+99.532	53.198 Lt	4.743	Guy Wire Anchor
51	E 55+96.185	60.298 Lt	1.299	Guy Wire Anchor
52	E 55+85.007	57.638 Lt	2.953	Guy Wire Anchor
53	E 55+80.521	64.858 Lt	2.644	Guy Wire Anchor
54	E 55+78.155	40.558 Lt	15.18	Guy Wire Anchor
55	E 55+99.483	53.198 Lt	4.749	Guy Wire Anchor
56	E 55+99.439	57.098 Lt	2.418	Guy Wire Anchor
57	E 55+84.003	63.028 Lt	1.771	Guy Wire Anchor

Caltrans Metric

DIST	COUNTY	ROUTE	KILOMETER POST TOTAL PROJECT	SHEET No	TOTAL SHEETS
04	SF	80	13.2/13.9	20R2	1204

Gene V. Lusherovich 10/07/04
REGISTERED CIVIL ENGINEER DATE

12-6-04
PLANS APPROVAL DATE

REGISTERED PROFESSIONAL ENGINEER
Gene V. Lusherovich
No. C 54338
Exp. 12/31/05
CIVIL
STATE OF CALIFORNIA

PARSONS BRINCKERHOFF QUADE & DOUGLAS, INC.
303 Second St., Suite 700N
San Francisco, CA 94107-1317

The State of California or its officers or agents shall not be responsible for the accuracy or completeness of electronic copies of this plan sheet.

Caltrans now has a web site! To get to the web site, go to http://www.dot.ca.gov

NOTES:

1. Locations of utility facilities on these plans are approximate and shall be verified by the Contractor prior to construction.
2. Contractor to provide temporary utility connections during staging operations.
3. All compressed air lines are steel pipe unless otherwise noted.
4. All existing utilities are US Navy owned unless otherwise noted.
5. Contractor to protect /monitor existing utilities. Utilities are old and can break from ground vibration during construction.
6. US Navy's Electrical Power distributed as noted on the drawings.
7. Contractor to protect UC Seismograph Station.
8. Contractor to field route electrical duct bank. Excavation for installation of duct bank and manholes will be in the rock. For additional electrical manhole and duct bank information see E- sheets.
9. Elevation is based on 1929 National Geodetic Vertical datum (NGVD29).
10. Location of Guy Wire Anchors is approximate. Contractor to remove as necessary for construction of duct bank. Guy Wire and Tie-Back Anchors installed battered into the ground.

ABBREVIATIONS

ABD	Abandoned
CA	Compressed Air
DIP	Ductile Iron Pipe
E	Electric
FM	Force Main
kV	Kilo Volt
MCI	MCI Telecommunications
PACBELL	Pacific Bell
SFWD	San Francisco Water Department
S	Sanitary Sewer
ST	Steel
U	Utility
V	Volts
W	Water
UC	University of California

SYMBOLS

oC	Cable Vault
□E	Electric Handhole
oE	Electric Manhole
	Electric Pull Box
	Fire Hydrant
	Light Pole
oS	Sewer Manhole
	Storm Drain Inlet
oT	Telephone Manhole
oT	Telephone Vault
	Utility Pole
□U	Utility Vault
oW	Water Valve
□W	Water Vault

LEGEND

SYMBOL	UTILITY	OWNERSHIP
—— SD ——	Storm Drainage	Caltrans or US Navy
—— CA ——	Compressed Air	Caltrans

UTILITY PLAN

SCALE: 1:500

U-1

CALCULATED/ DESIGNED BY	KR	DATE 11/02	REVISED BY	DATE REVISED
CHECKED BY	EPJ	11/02		

DESIGN OVERSIGHT
Bob Zandipour

STATE OF CALIFORNIA - DEPARTMENT OF TRANSPORTATION
Caltrans

THIS PLAN ACCURATE FOR UTILITIES ONLY

ALL DIMENSIONS ARE IN METERS UNLESS OTHERWISE SHOWN

FOR REDUCED PLANS ORIGINAL SCALE IS IN MILLIMETERS 0 20 40 60 80

DGN FILE => 04-0120f1_0020R02.dgn
USERNAME => grodzki

CU 04251

EA 0120F1

LAST REVISION 00-00-00

DATE PLOTTED => 4/6/2012
TIME PLOTTED => 8:57:55 AM

REQUEST FOR INFORMATION NOT ADDRESSED IN THIS CCO REMAIN IN FORCE					
2	4/3/12	W2 DUCT BANKS REINFORCEMENT	MG	RG	205
1	12/12/11	W2 DUCT BANKS REINFORCEMENT	MG	RG	205
0	08/08/11	W2 DUCT BANKS REINFORCEMENT	MG	RG	205
MARK	DATE	DESCRIPTIONS	BY	CH'D	CCO#
		REVISIONS			

CONTRACT CHANGE ORDER NO. 205
SHEET 3 OF 21

NOTES:

1. CONTRACTOR TO VERIFY LOCATION AND ELEVATION OF EXISTING DUCTS PRIOR TO CONSTRUCTION. IF EXISTING, ABANDONED MCI DUCT BANK IS IN CONFLICT, THE CONFLICTING PORTION MAY BE REMOVED.
2. ALIGNMENT MAY BE ADJUSTED IN THE FIELD AS NECESSARY TO AVOID CONFLICT WITH TEMPORARY CONSTRUCTION FACILITIES AND TO MAINTAIN ACCESS.
3. VEHICULAR ACCESS TO THE TORPEDO BUILDING MUST BE MAINTAINED AT ALL TIMES.

DIST	COUNTY	ROUTE	KILOMETER POST TOTAL PROJECT	SHEET No	TOTAL SHEETS
04	SF	80	13.2/13.9	21S1 R2	1204

REGISTERED ELECTRICAL ENGINEER 07/05/11 DATE

PLANS APPROVAL DATE

REGISTERED PROFESSIONAL ENGINEER Mark Grodzki No. 65594 Exp. 09/30/11 CIVIL STATE OF CALIFORNIA

PB AMERICAS, Inc.
A Parsons Brinckerhoff Company
303 Second St., Suite 700N
San Francisco, CA 94107-1317

The State of California or its officers or agents shall not be responsible for the accuracy or completeness of electronic copies of this plan sheet.

Caltrans now has a web site! To get to the web site, go to http://www.dot.ca.gov

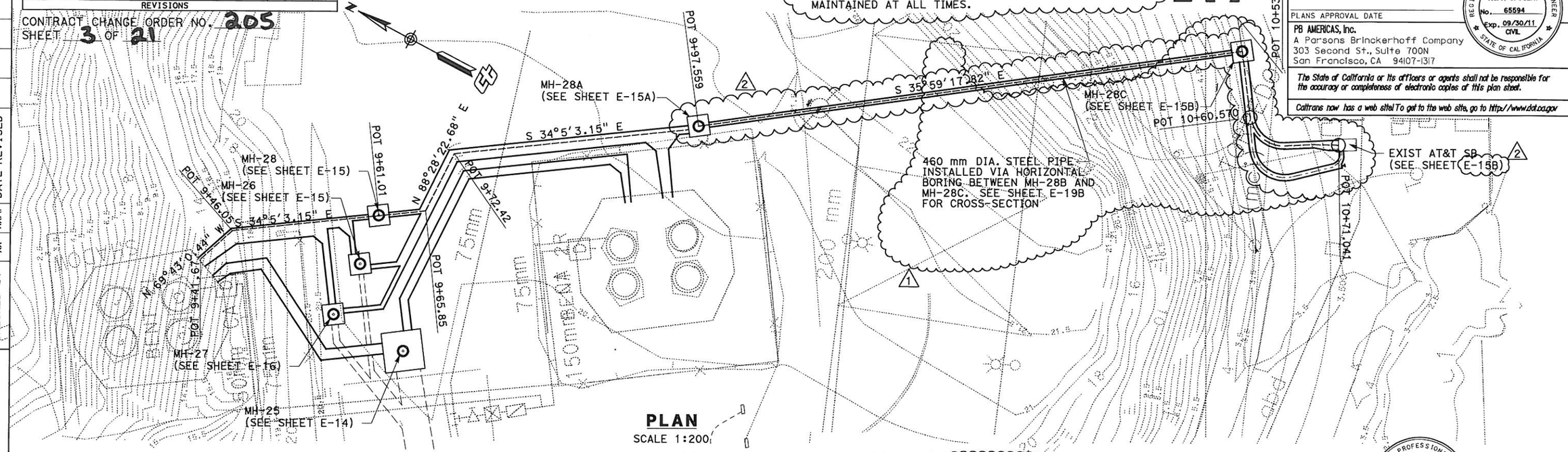

PLAN
SCALE 1:200

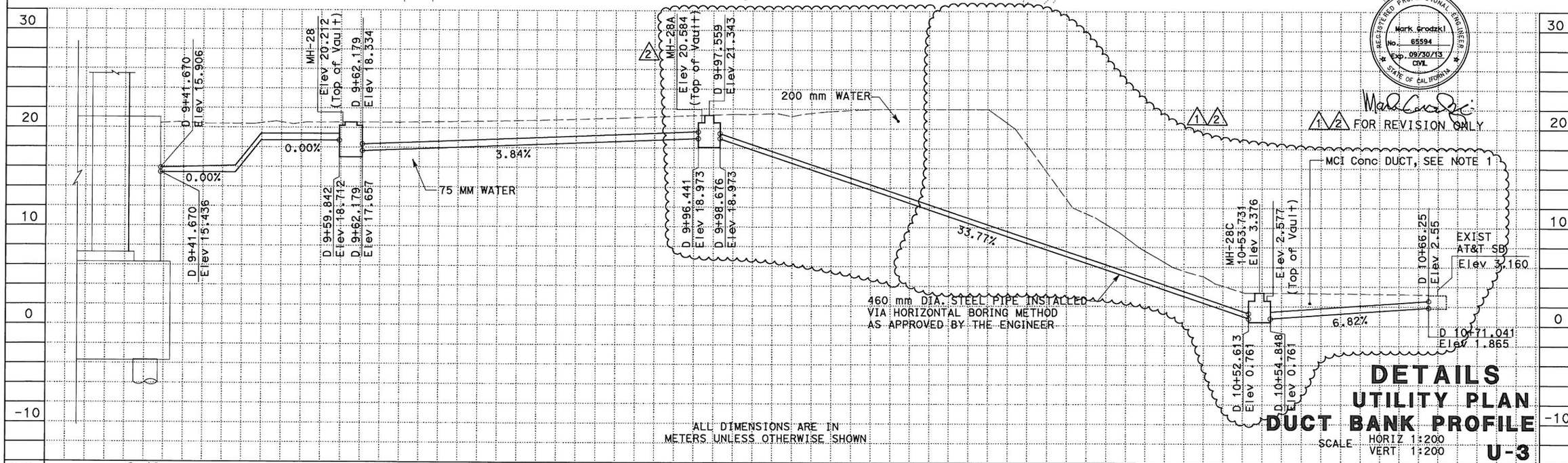

1 2 FOR REVISION ONLY

REGISTERED PROFESSIONAL ENGINEER Mark Grodzki No. 65594 Exp. 09/30/13 CIVIL STATE OF CALIFORNIA

ALL DIMENSIONS ARE IN METERS UNLESS OTHERWISE SHOWN

DETAILS
UTILITY PLAN
DUCT BANK PROFILE

SCALE HORIZ 1:200
VERT 1:200

U-3

STATE OF CALIFORNIA - DEPARTMENT OF TRANSPORTATION
Caltrans

DESIGN OVERSIGHT
BEHZAD GOLEMOHAMMADI

CALCULATED/DESIGNED BY XX
CHECKED BY XX
DATE XX/11
REVISED BY
DATE REVISED

FOR REDUCED PLANS ORIGINAL SCALE IS IN MILLIMETERS 0 20 40 60 80

DGN FILE =>04-0120f1_0021S01R02.dgn
USERNAME =>llorico

CU 04251
EA 0120F1

LAST REVISION 00-00-00
DATE PLOTTED => 06-APR-2012
TIME PLOTTED => 10:32

REQUEST FOR INFORMATION NOT ADDRESSED IN THIS CCO REMAIN IN FORCE

MARK	DATE	DESCRIPTIONS	BY	CH'D	CCO#
2	4/5/12	W2 DUCT BANKS REINFORCEMENT	MG	RG	205
1	12/12/11	W2 DUCT BANKS REINFORCEMENT	MG	RG	205
0	08/08/11	W2 DUCT BANKS REINFORCEMENT	MG	RG	205

REVISIONS

CONTRACT CHANGE ORDER NO. 205
SHEET 4 OF 21

NOTES:

1. CONTRACTOR TO VERIFY LOCATION AND ELEVATION OF EXISTING DUCTS PRIOR TO CONSTRUCTION. IF EXISTING, ABANDONED MCI DUCT BANK IS IN CONFLICT, THE CONFLICTING PORTION MAY BE REMOVED.

DIST	COUNTY	ROUTE	KILOMETER POST TOTAL PROJECT	SHEET No	TOTAL SHEETS
04	SF	80	13.2/13.9	21S2 R2	1204

REGISTERED ELECTRICAL ENGINEER 07/05/11 DATE

PLANS APPROVAL DATE

REGISTERED PROFESSIONAL ENGINEER Mark Grodzki No. 65594 Exp. 09/30/11 CIVIL STATE OF CALIFORNIA

PB AMERICAS, Inc.
A Parsons Brinckerhoff Company
303 Second St., Suite 700N
San Francisco, CA 94107-1317

The State of California or its officers or agents shall not be responsible for the accuracy or completeness of electronic copies of this plan sheet.

Caltrans now has a web site! To get to the web site, go to http://www.dot.ca.gov

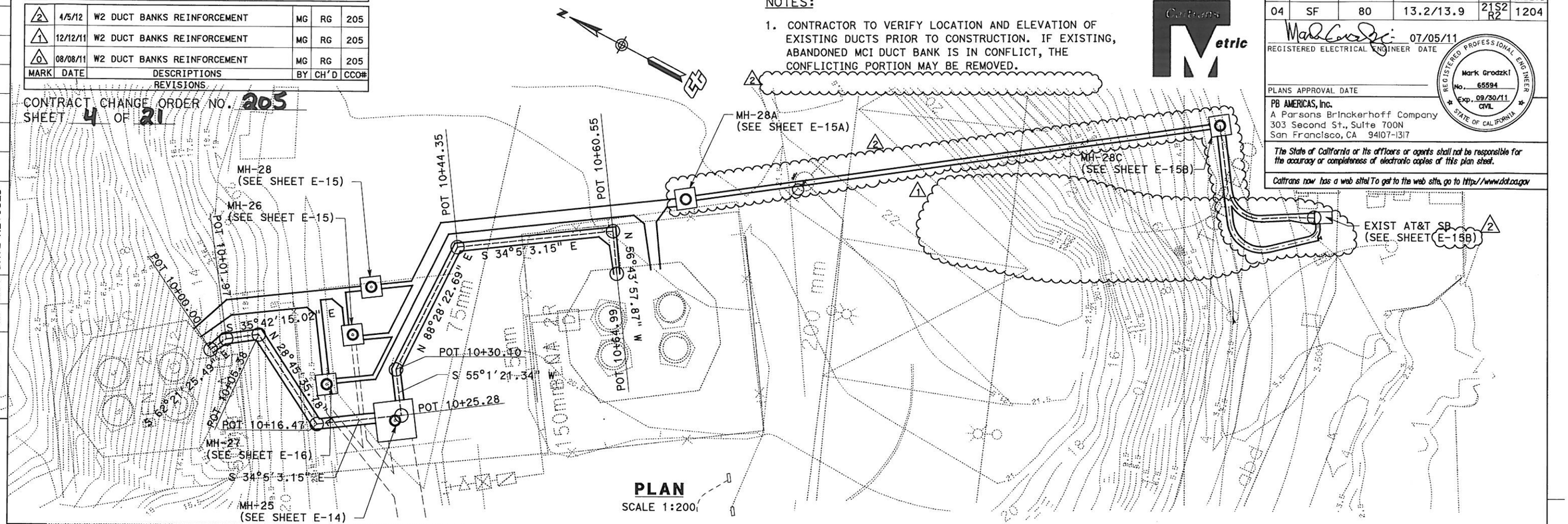

PLAN
SCALE 1:200

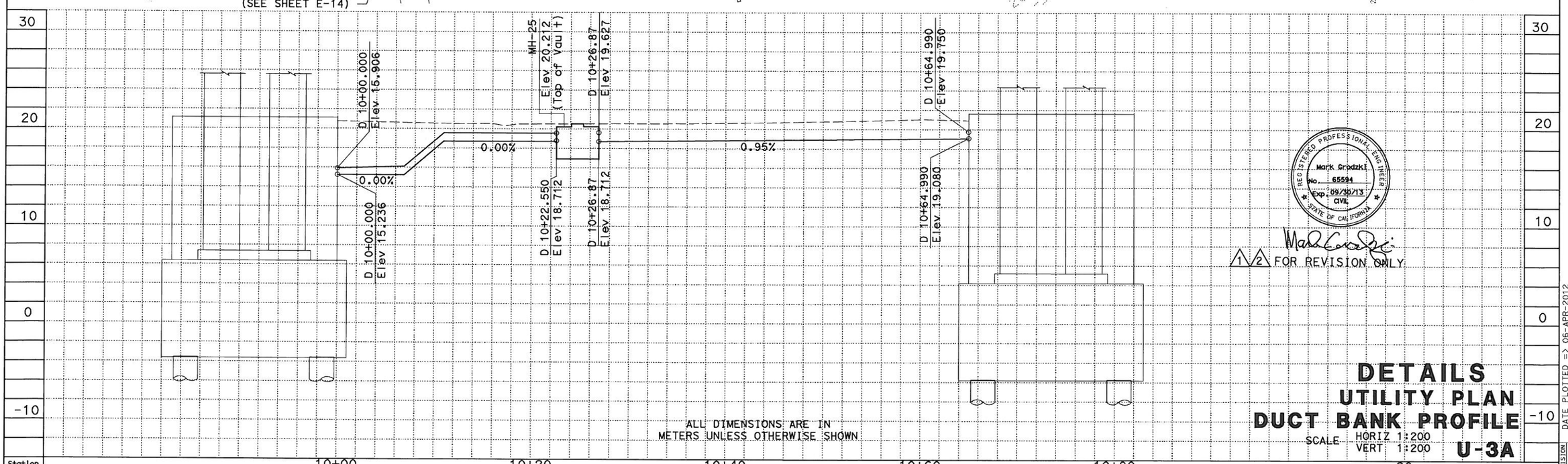

REGISTERED PROFESSIONAL ENGINEER Mark Grodzki No. 65594 Exp. 09/30/13 CIVIL STATE OF CALIFORNIA

1 2 FOR REVISION ONLY

ALL DIMENSIONS ARE IN METERS UNLESS OTHERWISE SHOWN

DETAILS
UTILITY PLAN
DUCT BANK PROFILE

SCALE HORIZ 1:200
VERT 1:200

U-3A

STATE OF CALIFORNIA - DEPARTMENT OF TRANSPORTATION
Caltrans

DESIGN OVERSIGHT
BEHZAD GOLEMOHAMMADI

CALCULATED/DESIGNED BY XX
CHECKED BY XX
DATE XX/XX
REVISED BY
DATE REVISED

LAST REVISION 00-00-00
DATE PLOTTED => 06-APR-2012
TIME PLOTTED => 10:33

FOR REDUCED PLANS ORIGINAL SCALE IS IN MILLIMETERS 0 20 40 60 80

DGN FILE =>04-0120f1_0021S02R02.dgn
USERNAME =>llorico

CU 04251

EA 0120F1

DIST	COUNTY	ROUTE	KILOMETER POST TOTAL PROJECT	SHEET No	TOTAL SHEETS
04	SF	80	13.2/13.9	21S3 R1	1204

REGISTERED ELECTRICAL ENGINEER 07/05/11 DATE

PLANS APPROVAL DATE

REGISTERED PROFESSIONAL ENGINEER Mark Grodzki No. 65594 Exp. 09/30/11 CIVIL STATE OF CALIFORNIA

PB AMERICAS, Inc.
A Parsons Brinckerhoff Company
303 Second St., Suite 700N
San Francisco, CA 94107-1317

The State of California or its officers or agents shall not be responsible for the accuracy or completeness of electronic copies of this plan sheet.

Caltrans now has a web site! To get to the web site, go to http://www.dot.ca.gov

STATE OF CALIFORNIA - DEPARTMENT OF TRANSPORTATION

DESIGN OVERSIGHT: BEHZAD GOLEMOHAMMADI

CALCULATED/DESIGNED BY XX DATE XX/11 REVISED BY

CHECKED BY XX XX/11 DATE REVISED

△1 ORIGINAL SHEET SUPERCEDED

REQUEST FOR INFORMATION NOT ADDRESSED IN THIS CCO REMAIN IN FORCE					
△1	12/12/11	W2 DUCT BANKS REINFORCEMENT	MG	LJ	205
△0	08/08/11	W2 DUCT BANKS REINFORCEMENT	MG	LJ	205
MARK	DATE	DESCRIPTIONS	BY	CH'D	CCO#
		REVISIONS			

CONTRACT CHANGE ORDER NO. 205
SHEET 5 OF 21

REGISTERED PROFESSIONAL ENGINEER Mark Grodzki No. 65594 Exp. 09/30/13 CIVIL STATE OF CALIFORNIA

FOR REVISION ONLY △1

△1

DETAILS
UTILITY PLAN
DUCT BANK STRUCTURAL DETAILS
NO SCALE

U-4

ALL DIMENSIONS ARE IN MILLIMETERS UNLESS OTHERWISE SHOWN

LAST REVISION 00-00-00 DATE PLOTTED => 12-DEC-2011 TIME PLOTTED => 17:11

FOR REDUCED PLANS ORIGINAL SCALE IS IN MILLIMETERS 0 20 40 60 80

DGN FILE =>04-0120f1_0021S03R01.dgn
USERNAME =>llorico

CU 04251 EA 0120F1

REQUEST FOR INFORMATION NOT ADDRESSED IN THIS CCO REMAIN IN FORCE					
4	04/05/12	W2 DUCTBANKS REINFORCEMENT	TW	RG	205
3	12/12/11	W2 DUCTBANKS REINFORCEMENT	TW	RG	205
2	08/08/11	W2 DUCTBANKS REINFORCEMENT	MG TW	RG	205
1	01/14/11	BASE INTEGRATION	RSB	WB	150
MARK	DATE	DESCRIPTIONS	BY	CH'D	CCO#
		REVISIONS			

CONTRACT CHANGE ORDER NO. 205
SHEET 6 OF 21

DIST	COUNTY	ROUTE	KILOMETER POST TOTAL PROJECT	SHEET No	TOTAL SHEETS
04	SF	80	13.2/13.9	96R4	1204

REGISTERED ELECTRICAL ENGINEER 12/19/02 DATE

12-6-04
PLANS APPROVAL DATE

REGISTERED PROFESSIONAL ENGINEER JENS ERLINGSSON No. 8249 Exp. 9/30/06 ELECTRICAL STATE OF CALIFORNIA

PB POWER, Inc.
A Parsons Brinckerhoff Company
303 Second St., Suite 700N
San Francisco, CA 94107-1317

The State of California or its officers or agents shall not be responsible for the accuracy or completeness of electronic copies of this plan sheet.

Caltrans now has a web site! To get to the web site, go to http://www.dot.ca.gov

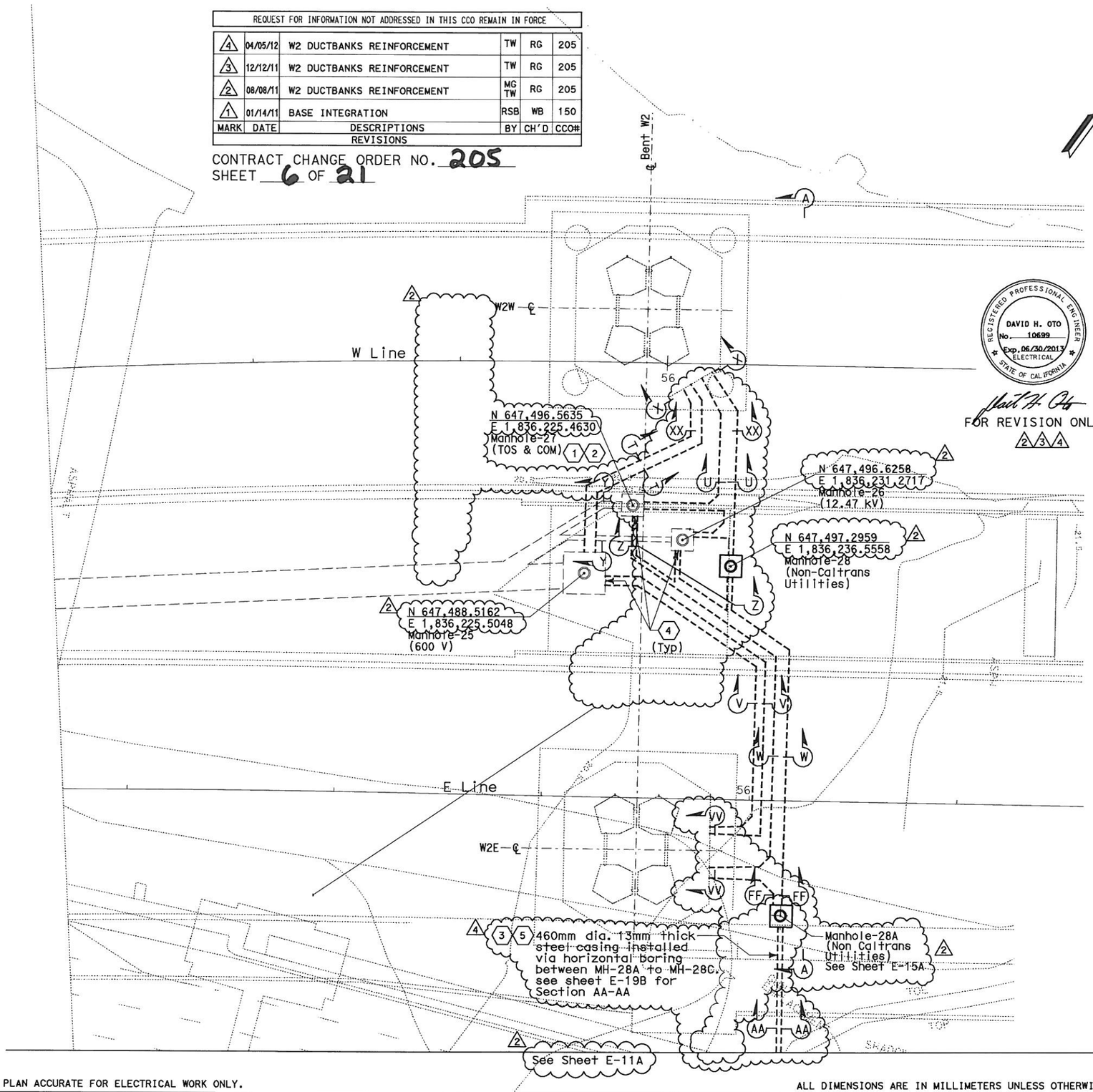

REGISTERED PROFESSIONAL ENGINEER DAVID H. OTO No. 10699 Exp. 06/30/2013 ELECTRICAL STATE OF CALIFORNIA
FOR REVISION ONLY 2 3 4

REGISTERED PROFESSIONAL ENGINEER SYN YEE CHIN No. 18186 Exp. 09/30/2011 ELECTRICAL STATE OF CALIFORNIA
FOR REVISION ONLY 1

NOTES:

1. References:
   - For manhole plans and sections, see sheets E-14 through E-16.
   - For typical manhole and duct bank details, see sheet E-17.
   - For duct bank sections, see sheets 19, 19A, 19B and E-23.
   - For pier W2W plans and sections, see sheet E-20.
   - For pier W2E plans and sections, see sheet E-21.
   - For circuit and conduit/cable tray schedules, see sheets starting at E-401.
   - Underground conduit duct bank shall be provided with additional reinforcement. For details, see sheets E-19C and E-19D.
2. For other related work, not shown on this sheet, see Electrical Special Provisions.
3. For location of manholes, see utility sheets.
4. For duct bank anchors on slopes, see utility sheets.
5. Refer to Utility Duct Bank Profile and Details, see sheet E-23.

SHEET NOTES:

1. Furnish and install 4-25.4 mm innerducts inside TOS/COM conduit (0560) from MH-27 to Bent W2.
2. Furnish and install BASE fiber optic cable in innerduct. See sheet E-1100.
3. The conduits from manhole MH-28A down to (E) AT&T Hut manhole shall be rigid pvc,schedule 40. Conduit 90 degree bends, risers or exposed to grade shall be rigid steel conduit.
4. The Contractor shall verify existing and the provisions for conduit entry to manhole. See sheet E-17.
5. Contractor shall provide a minimum cover of 610 mm from top of steel casing to top of finished grade. Connect the ground conductor to the ground bar inside manhole.

UNDERGROUND
DUCT BANKS AND MANHOLES
SCALE 1:200

E-11

STATE OF CALIFORNIA - DEPARTMENT OF TRANSPORTATION
Caltrans

DESIGN OVERSIGHT

CALCULATED/ DESIGNED BY	AB	DATE 11/04	REVISED BY
CHECKED BY	--	--/--	DATE REVISED

THIS PLAN ACCURATE FOR ELECTRICAL WORK ONLY.

ALL DIMENSIONS ARE IN MILLIMETERS UNLESS OTHERWISE SHOWN

FOR REDUCED PLANS ORIGINAL SCALE IS IN MILLIMETERS 0 20 40 60 80

DGN FILE =>04-0120f1_0096R04.dgn
USERNAME =>llorico

DATE PLOTTED => 06-APR-2012
TIME PLOTTED => 10:17

LAST REVISION 00-00-00

DIST	COUNTY	ROUTE	KILOMETER POST TOTAL PROJECT	SHEET No	TOTAL SHEETS
04	SF	80	13.2/13.9	96S1 R2	1204

REGISTERED ELECTRICAL ENGINEER DATE 07/05/11

PLANS APPROVAL DATE

REGISTERED PROFESSIONAL ENGINEER DAVID H. OTO No. 10699 Exp. 06/30/2013 STATE OF CALIFORNIA

PB AMERICAS, Inc.
A Parsons Brinckerhoff Company
303 Second St., Suite 700N
San Francisco, CA 94107-1317

The State of California or its officers or agents shall not be responsible for the accuracy or completeness of electronic copies of this plan sheet.

Caltrans now has a web site! To get to the web site, go to http://www.dot.ca.gov

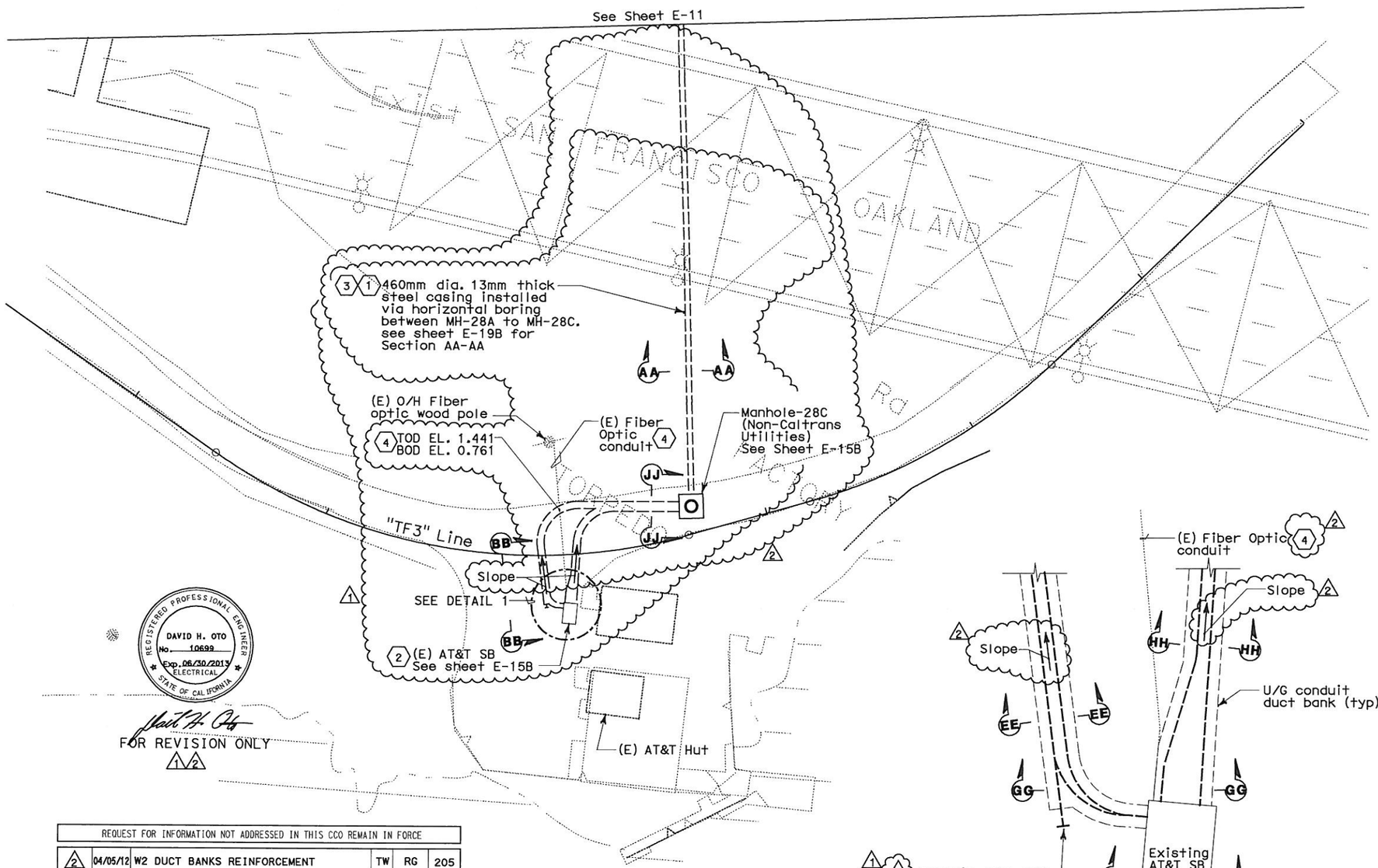

PLAN
SCALE: 1:200

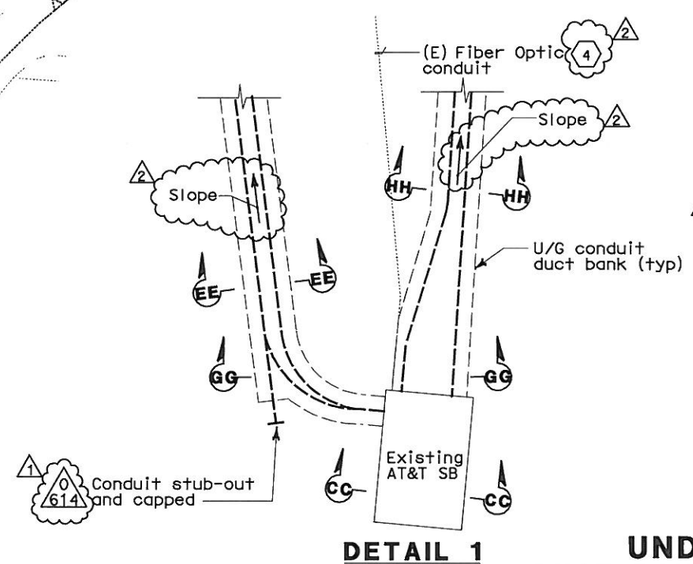

DETAIL 1
NTS

NOTES:

1. References:
   - For typical manhole and duct bank details, see sheet E-17.
   - For circuit and conduit/cable tray schedules, see sheets starting at E-401.
2. Mininum compressive strength of concrete f'c = 28 MPa.
3. For location of manholes, see utility sheets.
4. For other related work not shown on this see Electrical Special Provisions.
5. Provide long sweep for conduits inside duct banks whenever feasible.
6. For duct bank sections, see sheets E-19B.

SHEET NOTES

1. Contractor shall provide a minimum cover of 610 mm from top of steel casing to top of finished grade. Connect the ground conductor to the ground bar inside manhole.
2. Contractor to clean and drain (E) AT&T SB. Contractor shall use existing provisions for conduit entries to AT&T SB. Other conduit penetrations are not shown
3. The conduits from manhole MH-28A to AT&T Hut manhole shall be rigid pvc schedule 40. Conduit 90 degree bends, riser and exposed to grade shall be rigid galvanized steel conduit.
4. Contractor to verify location and elevation of existing fiber optic conduit. Contractor may adjust elevation of duct bank as required to avoid fiber optic conduit.

UNDERGROUND DUCT BANKS AND MANHOLES

SCALE: 1:200

REGISTERED PROFESSIONAL ENGINEER DAVID H. OTO No. 10699 Exp. 06/30/2013 ELECTRICAL STATE OF CALIFORNIA

MARK	DATE	DESCRIPTIONS	BY	CH'D	CCO#
		REQUEST FOR INFORMATION NOT ADDRESSED IN THIS CCO REMAIN IN FORCE			
2	04/05/12	W2 DUCT BANKS REINFORCEMENT	TW	RG	205
1	12/12/11	W2 DUCT BANKS REINFORCEMENT	MG	DO	205
0	08/08/11	W2 DUCT BANKS REINFORCEMENT	EJL TW	RG	205

REVISIONS

CONTRACT CHANGE ORDER NO. 205
SHEET 7 OF 21

THIS PLAN ACCURATE FOR ELECTRICAL WORK ONLY.

ALL DIMENSIONS ARE IN METERS UNLESS OTHERWISE SHOWN

FOR REDUCED PLANS ORIGINAL SCALE IS IN MILLIMETERS 0 20 40 60 80

DGN FILE =>04-0120f1_0096S01R02.dgn
USERNAME =>llorico

CU 04251 | EA 0120F1

STATE OF CALIFORNIA - DEPARTMENT OF TRANSPORTATION
Caltrans

DESIGN OVERSIGHT: BEHZAD GOLEMOHAMMADI

CALCULATED/DESIGNED BY: XX | DATE XX/11 | REVISED BY
CHECKED BY: XX | XX/11 | DATE REVISED

LAST REVISION 00-00-00 | DATE PLOTTED => 06-APR-2012 | TIME PLOTTED => 09:57

E-11A

DIST	COUNTY	ROUTE	KILOMETER POST TOTAL PROJECT	SHEET No	TOTAL SHEETS
04	SF	80	13.2/13.9	97R2	1204

12/19/02
REGISTERED ELECTRICAL ENGINEER DATE

12-6-04
PLANS APPROVAL DATE

REGISTERED PROFESSIONAL ENGINEER JENS ERLINGSSON No. 8249 Exp. 9/30/06 ELECTRICAL STATE OF CALIFORNIA

PB POWER, Inc.
A Parsons Brinckerhoff Company
303 Second St., Suite 700N
San Francisco, CA 94107-1317

The State of California or its officers or agents shall not be responsible for the accuracy or completeness of electronic copies of this plan sheet.

Caltrans now has a web site! To get to the web site, go to http://www.dot.ca.gov

Caltrans Metric

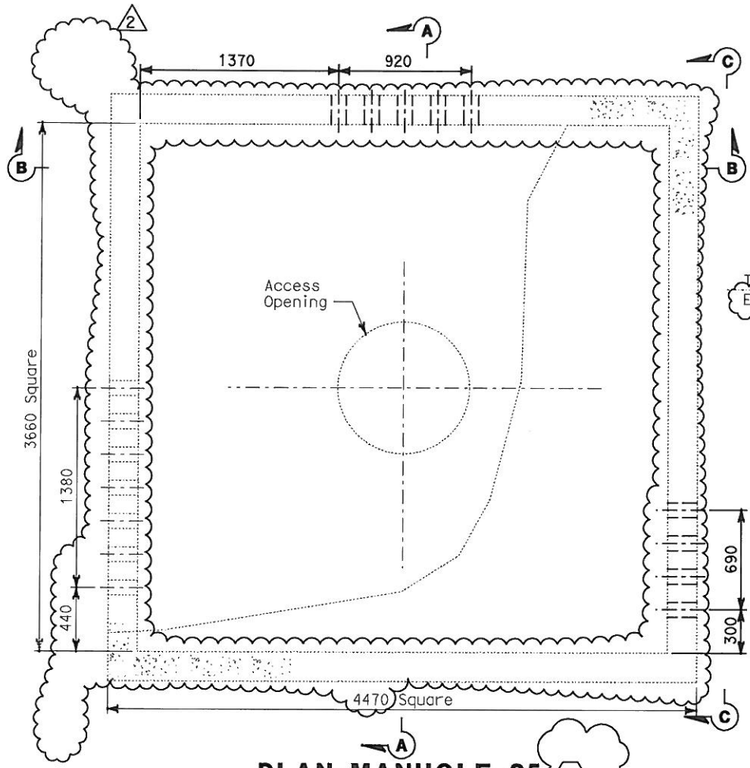

PLAN-MANHOLE-25
SCALE: 1:20 (600 V)

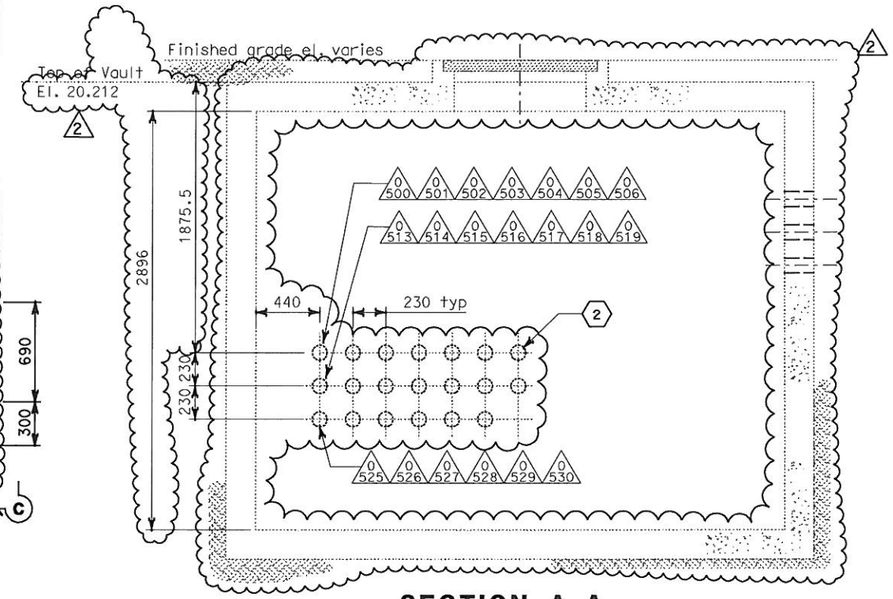

SECTION A-A
SCALE: 1:20

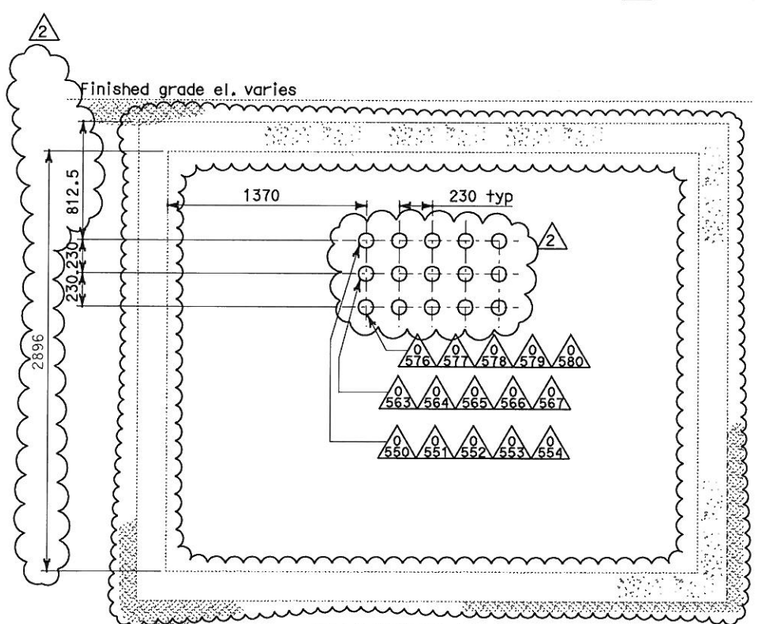

SECTION B-B
SCALE: 1:20

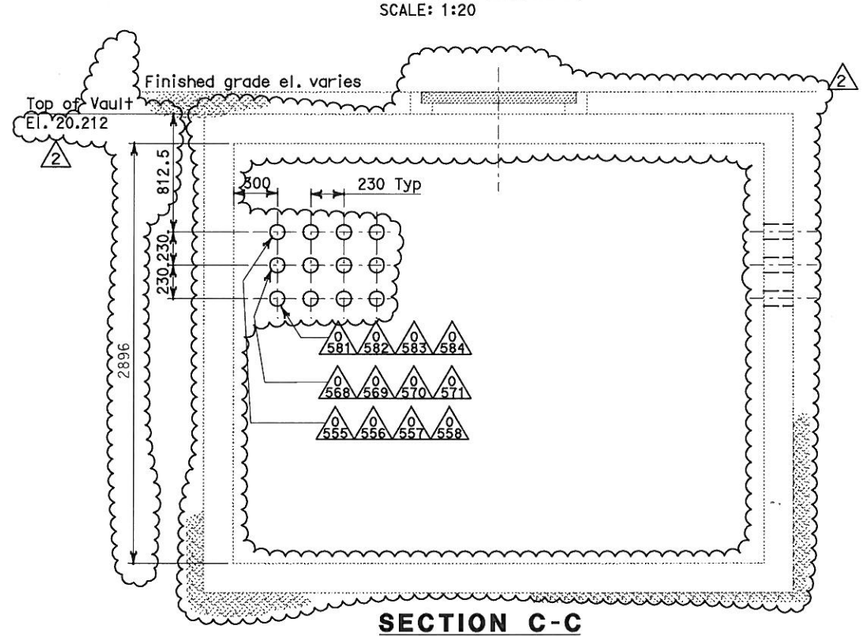

SECTION C-C
SCALE: 1:20

ALL DIMENSIONS IN MILLIMETERS UNLESS OTHERWISE SHOWN

NOTES:

1. References:
   - For duct bank and manhole plan, see sheet E-11.
   - For typical manhole and duct bank details, see sheet E-17.
   - For duct bank sections, see sheets E-19, E-19A and E-23.
   - For circuit and conduit/cable tray schedules, see sheets starting at E-401
2. For other related work, not shown on this sheet, see Electrical Special Provisions.

SHEET NOTES:

1. Deleted
2. Not in contract. (Work included on contract 04-120P4).

REGISTERED PROFESSIONAL ENGINEER DAVID H. OTO No. 10699 Exp. 06/30/2013 ELECTRICAL STATE OF CALIFORNIA

FOR REVISION ONLY

REQUEST FOR INFORMATION NOT ADDRESSED IN THIS CCO REMAIN IN FORCE					
2	08/08/11	W2 DUCT BANKS REINFORCEMENT	TW	RG	205
1	1/10/06	Revised Manhole detail	CR	JE	11
MARK	DATE	DESCRIPTIONS	BY	CH'D	CCO#
		REVISIONS			

CONTRACT CHANGE ORDER NO. 205
SHEET 8 OF 21

DETAILS
UNDERGROUND MANHOLE PLANS AND SECTIONS
SCALE AS NOTED

E-14

STATE OF CALIFORNIA - DEPARTMENT OF TRANSPORTATION
Caltrans

DESIGN OVERSIGHT
BEHZAD GOLEMOHAMMADI

CALCULATED/DESIGNED BY	AB	DATE 11/04	REVISED BY
CHECKED BY	--	--/--	DATE REVISED

LAST REVISION 00-00-00
DATE PLOTTED => 10-AUG-2011
TIME PLOTTED => 08:22

FOR REDUCED PLANS ORIGINAL SCALE IS IN MILLIMETERS 0 20 40 60 80

DGN FILE =>04-0120f1_0097R02.dgn
USERNAME =>llorico

CU 04251 | EA 0120F1

DIST	COUNTY	ROUTE	KILOMETER POST TOTAL PROJECT	SHEET No	TOTAL SHEETS
04	SF	80	13.2/13.9	98R2	1204

REGISTERED ELECTRICAL ENGINEER 12/19/02 DATE

12-6-04
PLANS APPROVAL DATE

REGISTERED PROFESSIONAL ENGINEER JENS ERLINGSSON No. 8249 Exp. 9/30/06 ELECTRICAL STATE OF CALIFORNIA

PB POWER, Inc.
A Parsons Brinckerhoff Company
303 Second St., Suite 700N
San Francisco, CA 94107-1317

The State of California or its officers or agents shall not be responsible for the accuracy or completeness of electronic copies of this plan sheet.

Caltrans now has a web site! To get to the web site, go to http://www.dot.ca.gov

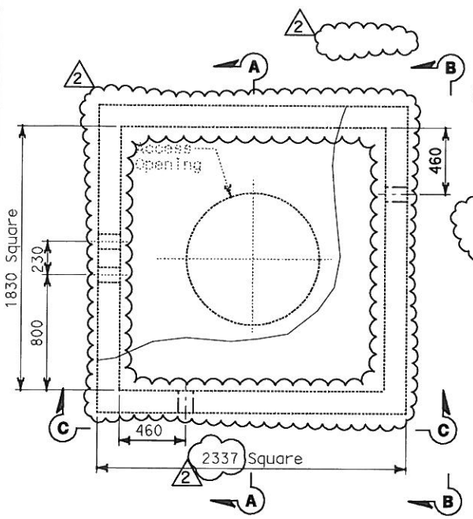

PLAN-MANHOLE-26
SCALE: 1:20 (12.47 kV)

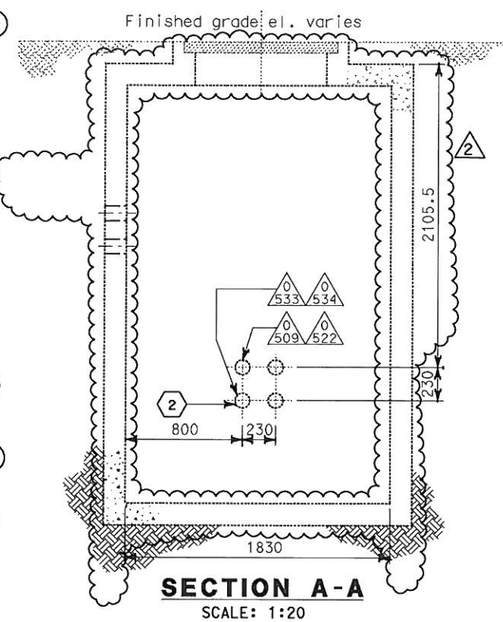

SECTION A-A
SCALE: 1:20

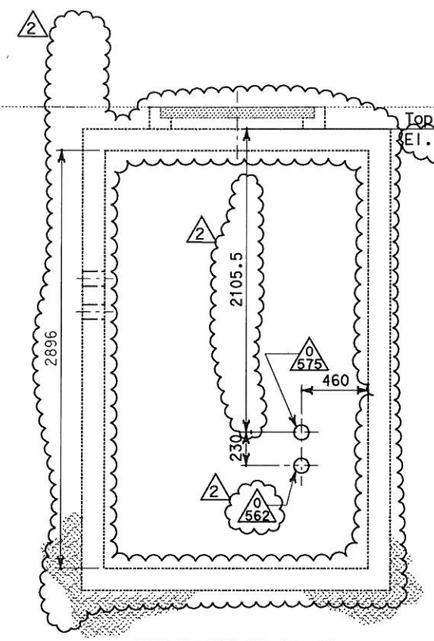

SECTION B-B
SCALE: 1:20

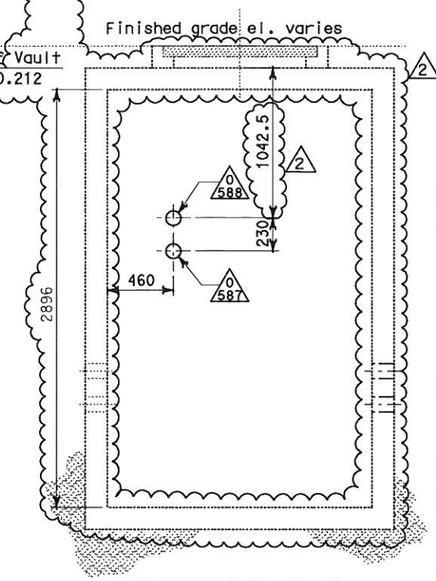

SECTION C-C
SCALE: 1:20

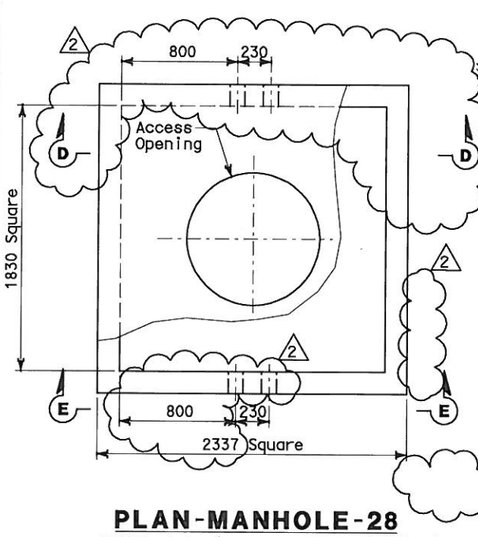

PLAN-MANHOLE-28
SCALE: 1:20 (Non-Caltrans Utilities)

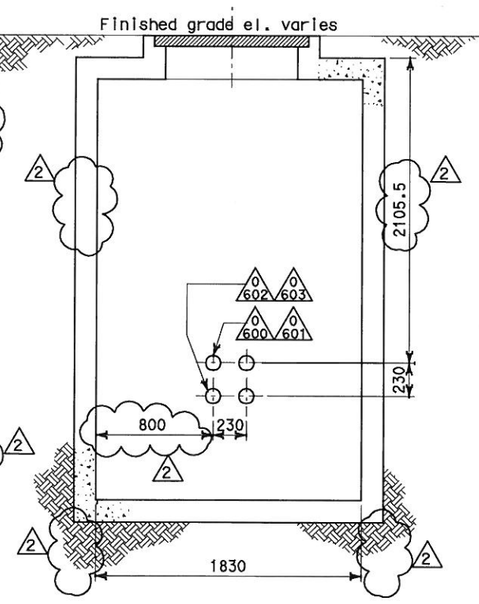

SECTION D-D
SCALE: 1:20

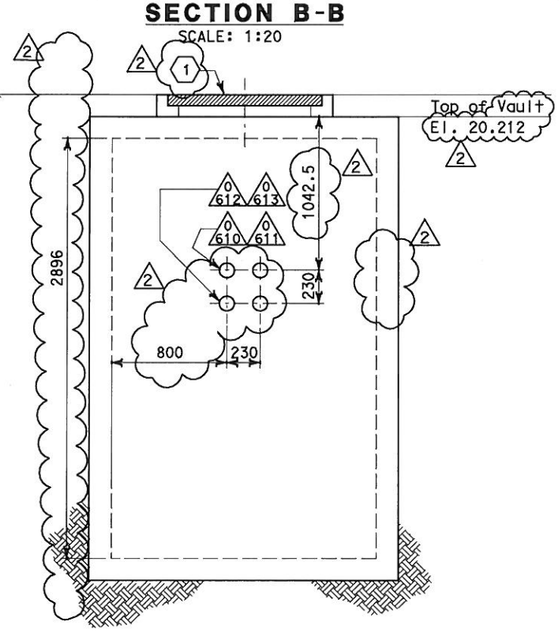

SECTION E-E
SCALE: 1:20

NOTES:

1. References:
   - For duct banks and manhole plan, see sheet E-11.
   - For typical manhole and duct bank details, see sheet E-17.
   - For duct bank sections, see sheets E-19 (2) E-19A and E-23.
   - For circuit and conduit/cable tray schedules, see sheets starting at E-401
2. For other related work, not shown on this sheet, see Electrical Special Provisions.

SHEET NOTES:

(1) Approximate distance of manhole necking or riser is from the finished grade and top of manhole. Maximum length of manhole necking or riser shall be 914 mm.

(2) Not in contract.
(Work included on contract 04-120P4).

REGISTERED PROFESSIONAL ENGINEER DAVID H. OTO No. 10699 Exp. 06/30/2013 ELECTRICAL STATE OF CALIFORNIA

FOR REVISION ONLY (2)

REQUEST FOR INFORMATION NOT ADDRESSED IN THIS CCO REMAIN IN FORCE

MARK	DATE	DESCRIPTIONS	BY	CH'D	CCO#
2	08/08/11	W2 DUCT BANKS REINFORCEMENT	TW	RG	205
1	1/10/06	Revised Manhole detail	CR	JE	11

REVISIONS

CONTRACT CHANGE ORDER NO. 205
SHEET 9 OF 21

DETAILS
UNDERGROUND MANHOLE PLAN AND SECTIONS
SCALE AS NOTED

E-15

DATE	REVISED BY	DATE	REVISED BY
11/04	AB	11/01	CYF

CALCULATED/DESIGNED BY
CHECKED BY

DESIGN OVERSIGHT
BEHZAD GOLEMOHAMMADI

STATE OF CALIFORNIA - DEPARTMENT OF TRANSPORTATION
Caltrans

LAST REVISION 00-00-00
DATE PLOTTED => 10-AUG-2011
TIME PLOTTED => 08:22

FOR REDUCED PLANS ORIGINAL SCALE IS IN MILLIMETERS 0 20 40 60 80

DGN FILE =>04-0120f1_0098R02.dgn
USERNAME =>llorico

CU 04251 EA 0120F1

DIST	COUNTY	ROUTE	KILOMETER POST TOTAL PROJECT	SHEET No	TOTAL SHEETS
04	SF	80	13.2/13.9	98S1 R2	1204

REGISTERED ELECTRICAL ENGINEER 07/05/11 DATE

PLANS APPROVAL DATE

REGISTERED PROFESSIONAL ENGINEER DAVID H. OTO No. 10699 Exp. 06/30/2013 ELECTRICAL STATE OF CALIFORNIA

PB AMERICAS, Inc.
A Parsons Brinckerhoff Company
303 Second St., Suite 700N
San Francisco, CA 94107-1317

The State of California or its officers or agents shall not be responsible for the accuracy or completeness of electronic copies of this plan sheet.

Caltrans now has a web site! To get to the web site, go to http://www.dot.ca.gov

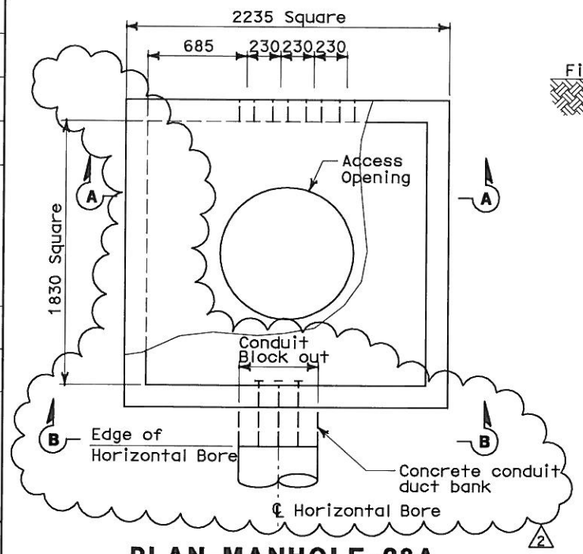

PLAN-MANHOLE-28A
SCALE: 1:20 (Non-Caltrans Utilities)

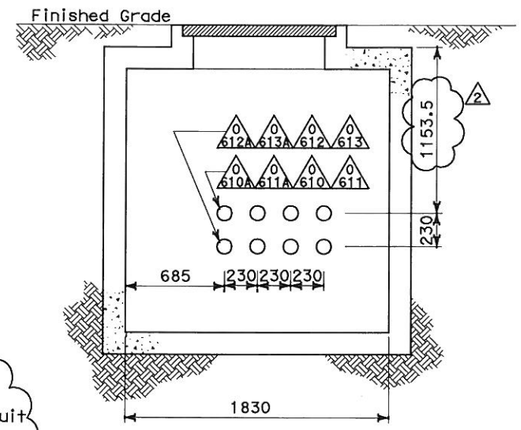

SECTION A-A
SCALE: 1:20

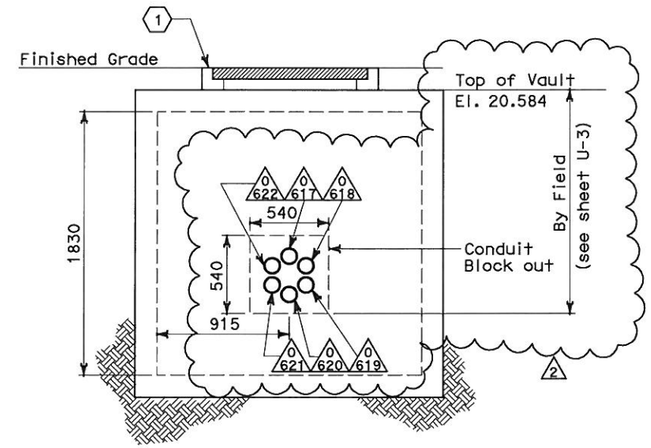

SECTION B-B
SCALE: 1:20

NOTES:

1. References:
   - For duct banks and manhole plan, see sheet E-11 and E-11A.
   - For typical manhole details, see sheet E-17.
   - For duct bank sections, see sheets E-19A, E-19B & E-23.
   - For circuit and conduit/cable tray schedules, see sheets starting at E-401
2. For other related work, not shown on this sheet, see Electrical Special Provisions.

SHEET NOTES:

(1) Approximate distance of manhole necking or riser is from the finished grade and top of manhole. Maximum length of manhole necking or riser shall be 914 mm.

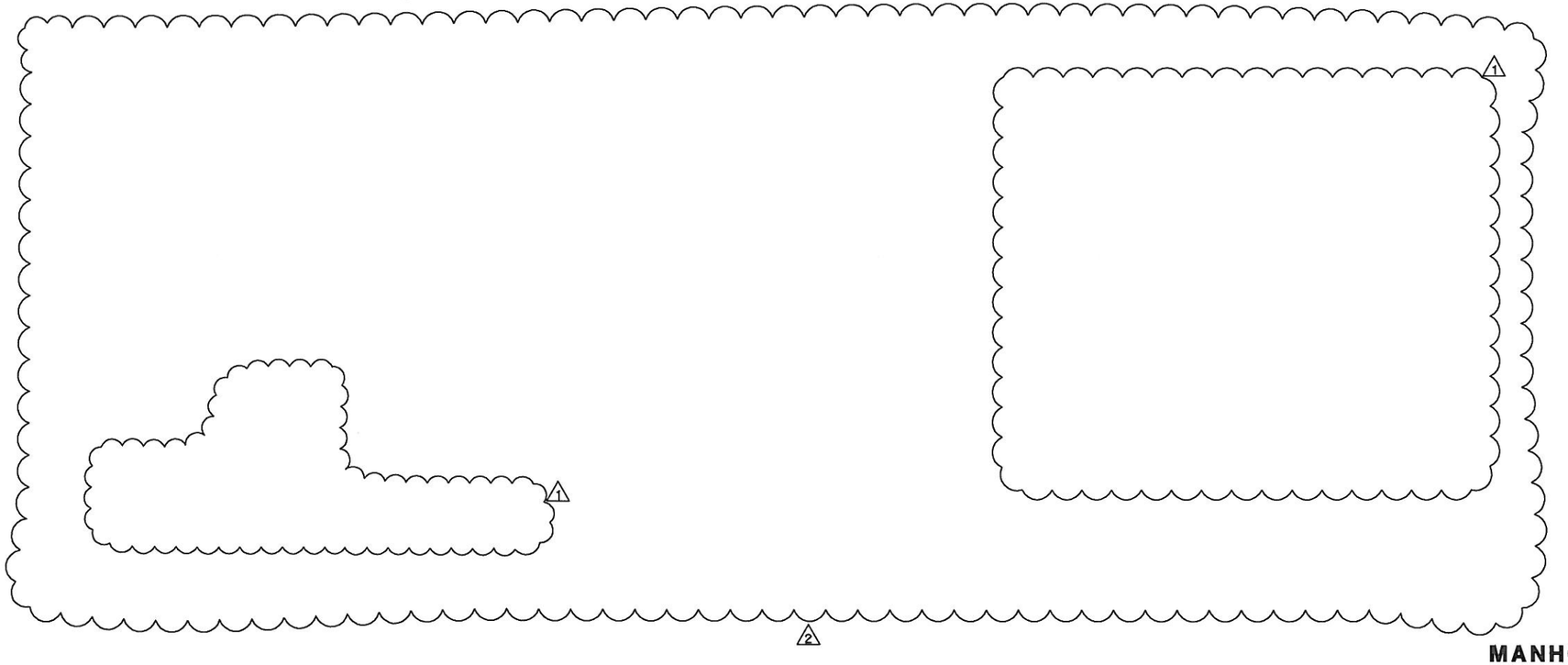

REGISTERED PROFESSIONAL ENGINEER DAVID H. OTO No. 10699 Exp. 06/30/2013 ELECTRICAL STATE OF CALIFORNIA

FOR REVISION ONLY
1 2

REQUEST FOR INFORMATION NOT ADDRESSED IN THIS CCO REMAIN IN FORCE					
2	04/05/12	W2 DUCT BANKS REINFORCEMENT	TW	RG	205
1	12/12/11	W2 DUCT BANKS REINFORCEMENT	MG	DO	205
0	08/08/11	W2 DUCT BANKS REINFORCEMENT	EJL TW	RG	205
MARK	DATE	DESCRIPTIONS	BY	CH'D	CCO#
		REVISIONS			

CONTRACT CHANGE ORDER NO. 205
SHEET 10 OF 21

DETAILS
UNDERGROUND MANHOLE PLAN AND SECTIONS
SCALE AS NOTED

E-15A

THIS PLAN ACCURATE FOR ELECTRICAL WORK ONLY.

ALL DIMENSIONS ARE IN MILLIMETERS UNLESS OTHERWISE SHOWN

STATE OF CALIFORNIA - DEPARTMENT OF TRANSPORTATION
Caltrans

DESIGN OVERSIGHT: BEHZAD GOLEMOHAMMADI

CALCULATED/DESIGNED BY | CHECKED BY | XX | DATE XX/11 | REVISED BY | DATE REVISED

LAST REVISION 00-00-00 | DATE PLOTTED => 05-APR-2012 | TIME PLOTTED => 17:26

FOR REDUCED PLANS ORIGINAL SCALE IS IN MILLIMETERS 0 20 40 60 80

DGN FILE =>04-0120f1_0098S01R02.dgn
USERNAME =>llorico

CU 04251 | EA 0120F1

DIST	COUNTY	ROUTE	KILOMETER POST TOTAL PROJECT	SHEET No	TOTAL SHEETS
04	SF	80	13.2/13.9	98S2 R2	1204

REGISTERED ELECTRICAL ENGINEER 07/05/11 DATE

PLANS APPROVAL DATE

REGISTERED PROFESSIONAL ENGINEER DAVID H. OTO No. 10699 Exp. 06/30/2013 ELECTRICAL STATE OF CALIFORNIA

PB AMERICAS, Inc.
A Parsons Brinckerhoff Company
303 Second St., Suite 700N
San Francisco, CA 94107-1317

The State of California or its officers or agents shall not be responsible for the accuracy or completeness of electronic copies of this plan sheet.

Caltrans now has a web site! To get to the web site, go to http://www.dot.ca.gov

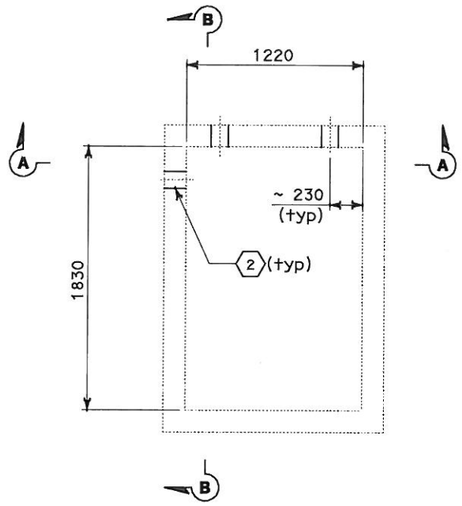

PLAN-(E) MANHOLE 1
ATT SB

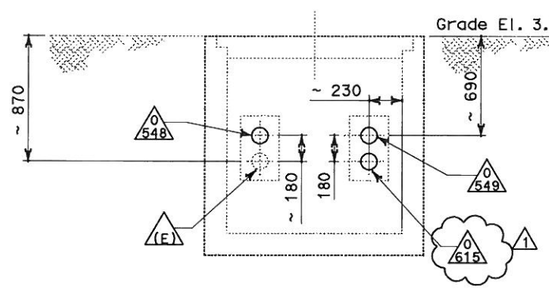

SECTION A-A

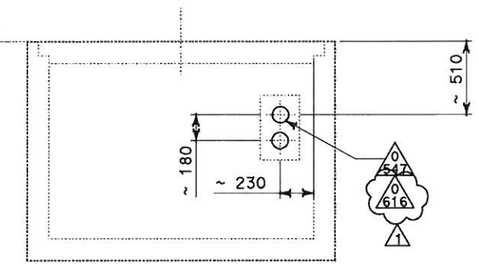

SECTION B-B

NOTES:

1. References:
   - For duct banks and manhole plan, see sheet E-11A.
   - For typical manhole details, see sheet E-17.
   - For duct bank sections, see sheet E-19B. 1
   - For circuit and conduit/cable tray schedules, see sheets starting at E-401
2. For other related work, not shown on this sheet, see Electrical Special Provisions.

SHEET NOTES:

1 Dimensions shown (~) are field survey. The Contractor is to verify to ensure the existing conduit is the reference for the actual location of the new conduits.

2 Contractor to ensure the conduit entering the (E) Manhole shall be seal watertight.

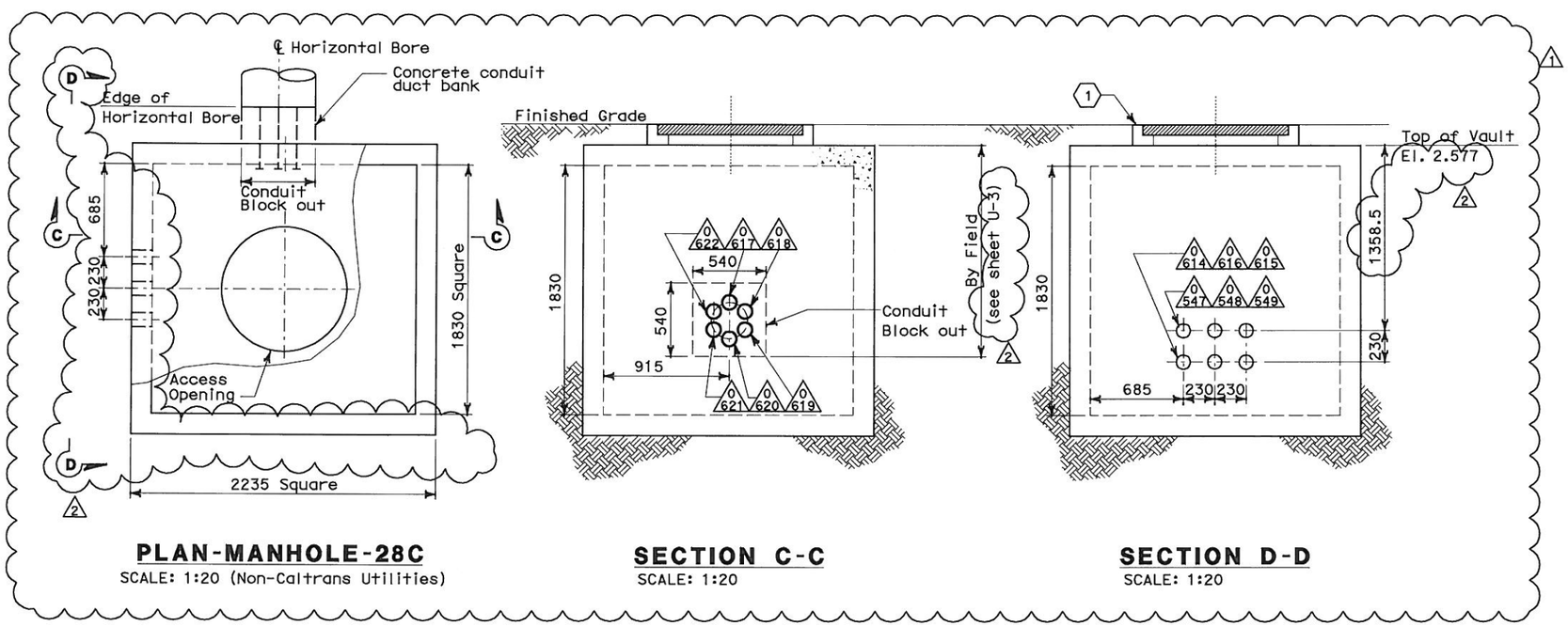

PLAN-MANHOLE-28C
SCALE: 1:20 (Non-Caltrans Utilities)

SECTION C-C
SCALE: 1:20

SECTION D-D
SCALE: 1:20

FOR REVISION ONLY
1 2

REQUEST FOR INFORMATION NOT ADDRESSED IN THIS CCO REMAIN IN FORCE					
2	04/05/12	W2 DUCT BANKS REINFORCEMENT	TW	RG	205
1	12/12/11	W2 DUCT BANKS REINFORCEMENT	MG	DO	205
0	08/08/11	W2 DUCT BANKS REINFORCEMENT	EJL TW	RG	205
MARK	DATE	DESCRIPTIONS	BY	CH'D	CCO#
		REVISIONS			

CONTRACT CHANGE ORDER NO. 205
SHEET 11 OF 21

DETAILS
UNDERGROUND MANHOLE PLAN AND SECTIONS
SCALE: NONE

E-15B

THIS PLAN ACCURATE FOR ELECTRICAL WORK ONLY.

ALL DIMENSIONS ARE IN MILLIMETERS UNLESS OTHERWISE SHOWN

REVISED BY	DATE REVISED
EL	07/11
RG	07/11

CALCULATED/DESIGNED BY
CHECKED BY

DESIGN OVERSIGHT
BEHZAD GOLEMOHAMMADI

STATE OF CALIFORNIA - DEPARTMENT OF TRANSPORTATION

LAST REVISION 00-00-00

DATE PLOTTED => 05-APR-2012
TIME PLOTTED => 17:26

FOR REDUCED PLANS ORIGINAL SCALE IS IN MILLIMETERS 0 20 40 60 80

DGN FILE =>04-0120f1_0098S02R02.dgn
USERNAME =>llorico

CU 04251 EA 0120F1

DIST	COUNTY	ROUTE	KILOMETER POST TOTAL PROJECT	SHEET No	TOTAL SHEETS
04	SF	80	13.2/13.9	99R3	1024

12/19/02
REGISTERED ELECTRICAL ENGINEER DATE

12-6-04
PLANS APPROVAL DATE

REGISTERED PROFESSIONAL ENGINEER JENS ERLINGSSON No. 8249 Exp. 9/30/06 ELECTRICAL STATE OF CALIFORNIA

PB POWER, Inc.
A Parsons Brinckerhoff Company
303 Second St., Suite 700N
San Francisco, CA 94107-1317

The State of California or its officers or agents shall not be responsible for the accuracy or completeness of electronic copies of this plan sheet.

Caltrans now has a web site! To get to the web site, go to http://www.dot.ca.gov

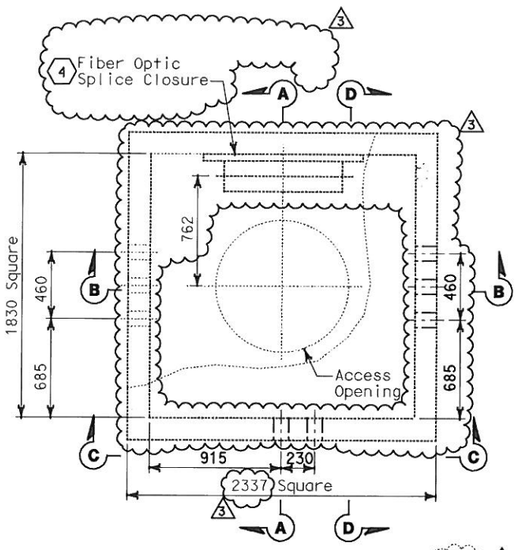

PLAN-MANHOLE-27
SCALE: 1:20 (TOS & COMMUNICATION)

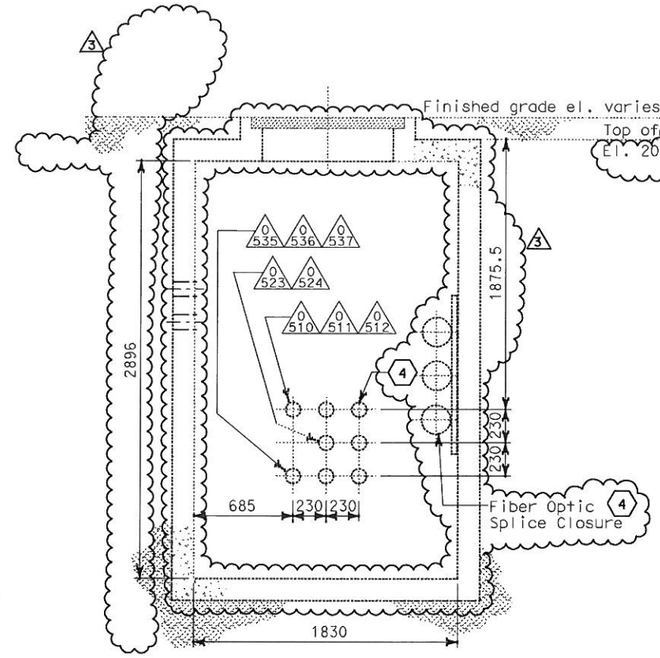

SECTION A-A
SCALE: 1:20

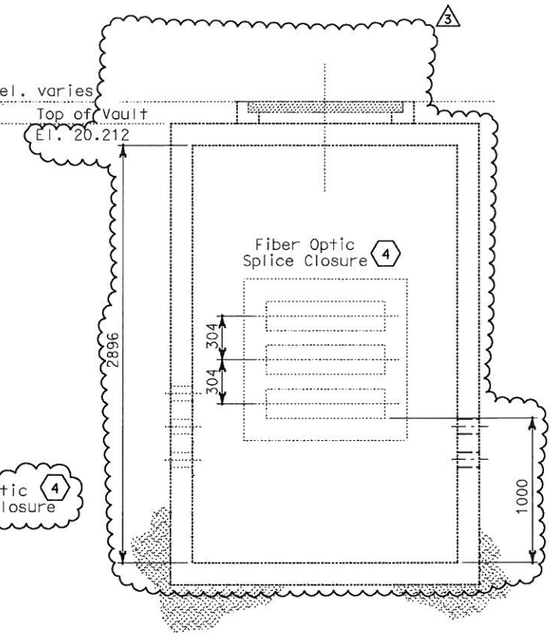

SECTION B-B
SCALE: 1:20

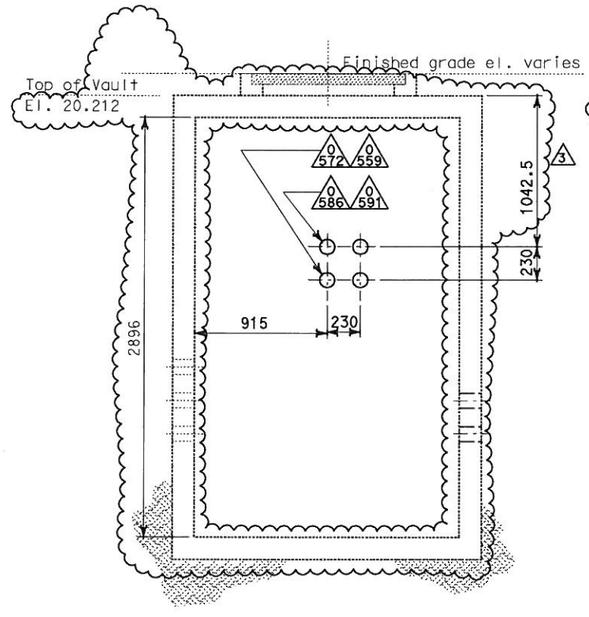

SECTION C-C
SCALE: 1:20

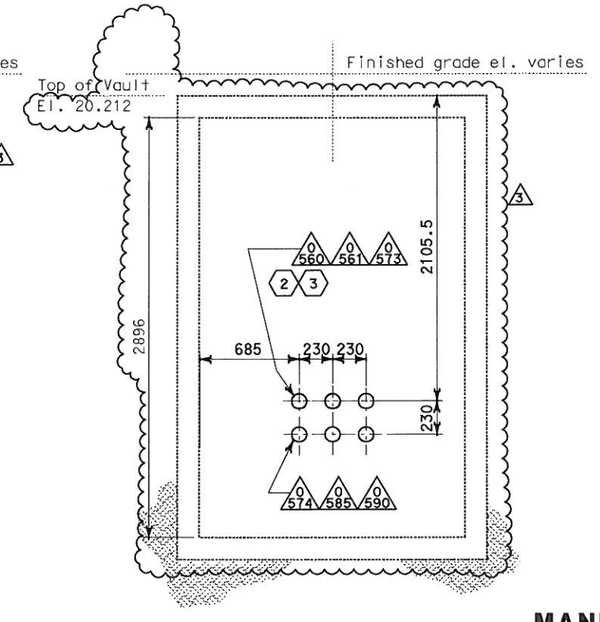

SECTION D-D
SCALE: 1:20

NOTES:

1. References:
   - For duct bank and manhole plan, see sheet E-11.
   - For typical duct bank and manhole details, see sheet E-17.
   - For duct bank sections, see sheets E-19, & E-19A. 3
   - For circuit and conduit/cable tray schedules, see sheets starting at E-401.
2. For other related work, not shown on this sheet, see Electrical Special Provisions.

SHEET NOTES:

1. Deleted 3
2. Furnish and Install 4-25.4 mm innerducts inside TOS/COM conduit (0560).
3. Furnish and install BASE fiber optic cable in innerduct. See sheet E-1100.
4. Not in contract. (Work included on contract 04-120P4). 3

REGISTERED PROFESSIONAL ENGINEER DAVID H. OTO No. 10699 Exp. 06/30/2013 ELECTRICAL STATE OF CALIFORNIA
FOR REVISION ONLY 3

REGISTERED PROFESSIONAL ENGINEER SYN YEE CHIN No. 18186 Exp. 09/30/2011 ELECTRICAL STATE OF CALIFORNIA
FOR REVISION ONLY 2

REQUEST FOR INFORMATION NOT ADDRESSED IN THIS CCO REMAIN IN FORCE

MARK	DATE	DESCRIPTIONS	BY	CH'D	CCO#
3	08/08/11	W2 DUCT BANKS REINFORCEMENT	TW	RG	205
2	03/01/11	BASE INTEGRATION	RSB	WB	150
1	1/10/06	Revised Manhole detail	CR	JE	11

REVISIONS

CONTRACT CHANGE ORDER NO. 205
SHEET 12 OF 21

DETAILS
UNDERGROUND MANHOLE PLAN AND SECTIONS
SCALE AS NOTED

E-16

DATE II/04	REVISED BY	DATE REVISED
AB	--	--/--

CALCULATED/DESIGNED BY
CHECKED BY

DESIGN OVERSIGHT
BEHZAD GOLEMOHAMMADI

STATE OF CALIFORNIA - DEPARTMENT OF TRANSPORTATION
Caltrans

LAST REVISION 00-00-00
DATE PLOTTED => 10-AUG-2011
TIME PLOTTED => 08:22

FOR REDUCED PLANS ORIGINAL SCALE IS IN MILLIMETERS 0 20 40 60 80

DGN FILE =>04-0120f1_0099R03.dgn
USERNAME =>llorico

CU 04251 | EA 0120F1

DIST	COUNTY	ROUTE	KILOMETER POST TOTAL PROJECT	SHEET No	TOTAL SHEETS
04	SF	80	13.2/13.9	100 R2	1204

REGISTERED ELECTRICAL ENGINEER 12/19/02 DATE

12-6-04
PLANS APPROVAL DATE

REGISTERED PROFESSIONAL ENGINEER JENS ERLINGSSON No. 8249 Exp. 9/30/06 ELECTRICAL STATE OF CALIFORNIA

PB POWER, Inc.
A Parsons Brinckerhoff Company
303 Second St., Suite 700N
San Francisco, CA 94107-1317

The State of California or its officers or agents shall not be responsible for the accuracy or completeness of electronic copies of this plan sheet.

Caltrans now has a web site! To get to the web site, go to http://www.dot.ca.gov

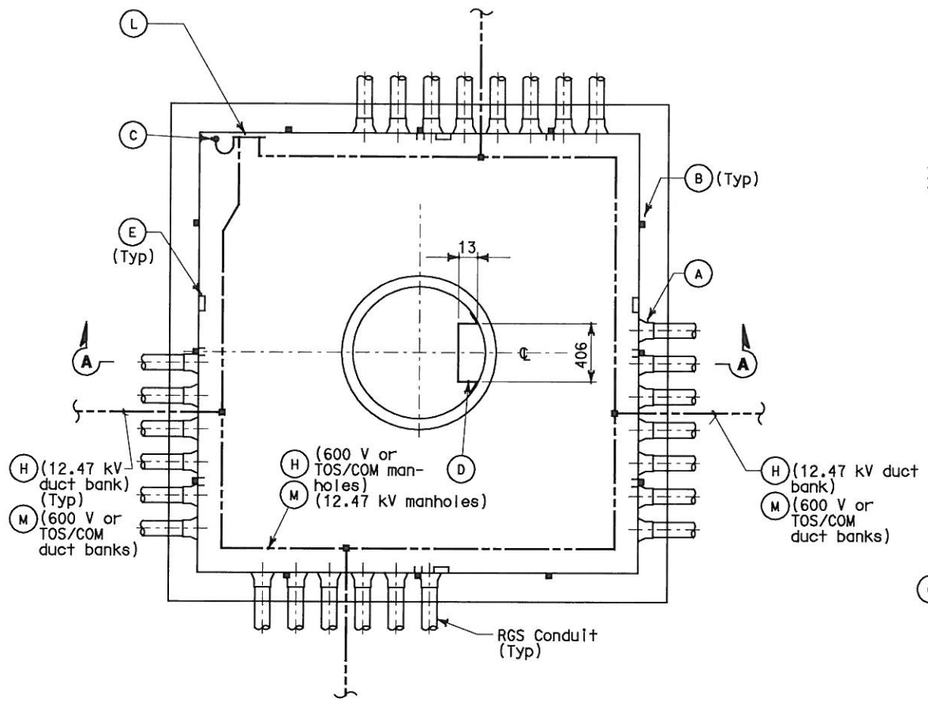

PLAN
SCALE 1:20

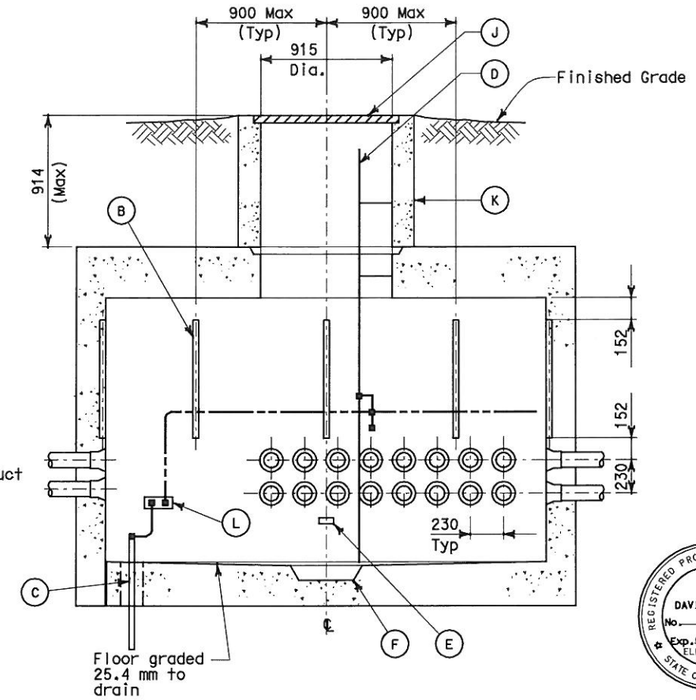

SECTION A-A
SCALE 1:20

REGISTERED PROFESSIONAL ENGINEER DAVID H. OTO No. 10699 Exp. 06/30/2013 ELECTRICAL STATE OF CALIFORNIA

FOR REVISION ONLY 1 2

TYPICAL MANHOLE DETAIL

NOTES:

1. ~~Manhole, cast iron ring and cover shall be designed~~ for HS-20 traffic loading acting on top of and beyond the dimensional plan limits of the manhole. Additionally, the manhole shall be designed for a 1330KN point load distributed over a 1000mm X 1000mm area at the finished grade elevation. This load shall be applied on top of the manhole but outside the manhole cover and riser, ~~and beyond the dimensional plan limits of the manhole.~~ 1
2. Minimum ultimate compressive strength f'c = 25 MPa.
3. Steel reinforcement yield strength Fy=414 MPa.
4. All manhole joints shall be primed with joint primer by manhole supplier. In addition, all joints shall be made watertight by using joint sealant.
5. Prior to setting the manhole, the contractor shall prepare the site by providing a minimum of 152 mm of sand or other suitable base material. The base material shall be compacted and graded to the required level.
6. Manholes shall comply with requirements of ASTM C478 and ASTM C858, as applicable.
7. The ladder shall be designed to the specifications in the latest revision of American National Standard Institute's publication A1413, safety requirements for "Fixed Ladder".
8. Manhole cover engraved nameplates shall read as follows:
   a) Caltrans High Voltage } Manholes No. 1,3,8,11,14,17,20, 23 and 26.
   b) Caltrans 600 V } Manholes No. 2,5,7,10,13,16,19, 22 and 25.
   c) Caltrans TOS&COMM } Manholes No. 4,6,9,12,15,18,21, 24, 27, 29 and 30.
   d) Non-Caltrans Utility } Manhole No. 28.
9. For other related work, not shown on this sheet, see Electrical Special Provisions.
10. References:
    - For duct banks ~~and manholes~~, see sheet E11, ~~& E-11A.~~ 1
    - For manhole ~~plans and~~ sections, see sheets E-14 through E-16.
    - For duct bank sections, see sheet E-19, E-19A, E-19B. 1
    - For grounding interface, see sheet E-18.
    - For circuit and conduit/cable tray ~~schedules, see sheets starting at E-401.~~
11. Manhole cover shall be standard size round steel plate unless noted otherwise. 1
12. All exposed metal shall be grounded.
13. For actual duct bank configuration and details see sheets E-19B, E-19C and E-19D. 1 2

LIST OF MATERIAL

ITEM NO	DESCRIPTION	REMARKS
A	End bells. For size & location see manholes plans & sections	
B	41 mm X41 mm concrete insert strut channel (flush mounted)	Hot dip galvanized
C	Copper clad round rod 19 dia x 3050 long	
D	Ladder complete with supports	Hot dip galvanized
E	Pull iron-insert type	As required
F	305 dia round x 102 deep sump	
H	500 kcmil bare copper ground conductor	
J	Cast iron manhole cast cover with engraved nameplate	See notes 8 and 11
K	Manhole necking or riser	As required
L	Ground copper bar, 6 mm thick x 100 mm high x 600 mm long	
M	#4/0 AWG bare copper ground	

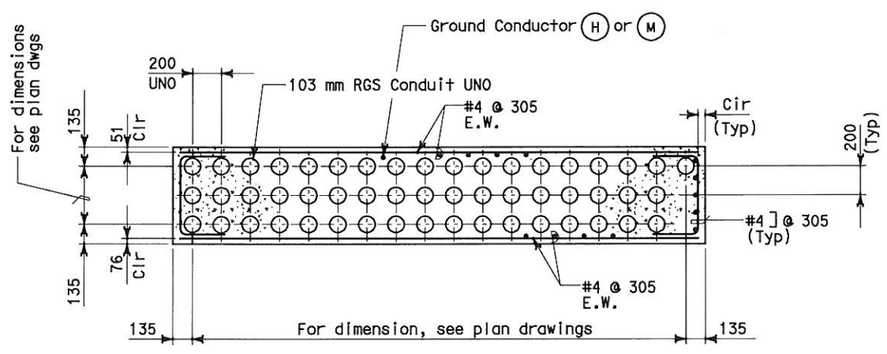

TYPICAL DUCT BANK DETAIL

SCALE 1:20

(Duct Bank shown for reference only - see note 13) 1

REQUEST FOR INFORMATION NOT ADDRESSED IN THIS CCO REMAIN IN FORCE					
2	12/12/11	W2 DUCT BANKS REINFORCEMENT	TW	RG	205
1	08/08/11	W2 DUCT BANKS REINFORCEMENT	LJ TW	LJ RG	205
MARK	DATE	DESCRIPTIONS	BY	CH'D	CCO#
		REVISIONS			

CONTRACT CHANGE ORDER NO. 205
SHEET 13 OF 21

ALL DIMENSIONS ARE IN MILLIMETERS UNLESS OTHERWISE SHOWN.

DETAILS
UNDERGROUND
TYPICAL MANHOLE AND DUCT BANK

SCALE AS NOTED

E-17

STATE OF CALIFORNIA - DEPARTMENT OF TRANSPORTATION

DESIGN OVERSIGHT: BEHZAD GOLEMOHAMMADI

CALCULATED/DESIGNED BY: IAH | CHECKED BY: CYF

DATE 9/01 | REVISED BY | 12/01 | DATE REVISED

LAST REVISION 00-00-00

DATE PLOTTED => 12-DEC-2011
TIME PLOTTED => 17:37

FOR REDUCED PLANS ORIGINAL SCALE IS IN MILLIMETERS 0 20 40 60 80

DGN FILE =>04-0120f1_0100R02.dgn
USERNAME =>llorico

CU 04251 | EA 0120F1

DIST	COUNTY	ROUTE	KILOMETER POST TOTAL PROJECT	SHEET No	TOTAL SHEETS
04	SF	80	13.2/13.9	102 R1	1204

12/19/02
REGISTERED ELECTRICAL ENGINEER DATE

12-6-04
PLANS APPROVAL DATE

REGISTERED PROFESSIONAL ENGINEER JENS ERLINGSSON No. 8249 Exp. 9/30/06 ELECTRICAL STATE OF CALIFORNIA

PB POWER, Inc.
A Parsons Brinckerhoff Company
303 Second St., Suite 700N
San Francisco, CA 94107-1317

The State of California or its officers or agents shall not be responsible for the accuracy or completeness of electronic copies of this plan sheet.

Caltrans now has a web site! To get to the web site, go to http://www.dot.ca.gov

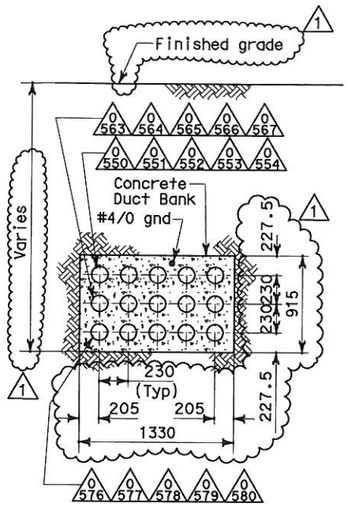

SECTION T-T
SCALE 1:20

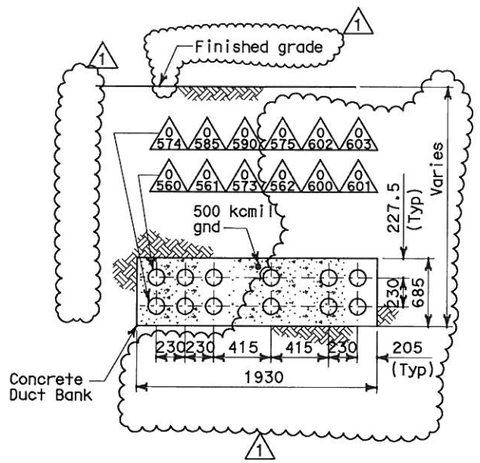

SECTION U-U
SCALE 1:20

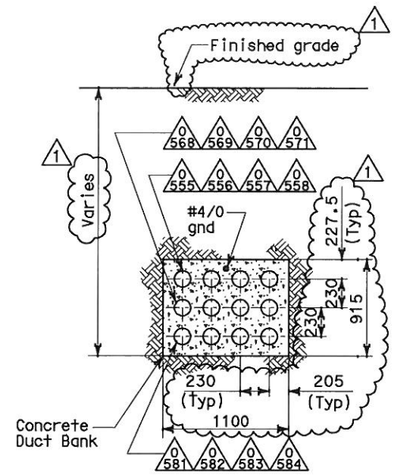

SECTION V-V
SCALE 1:20

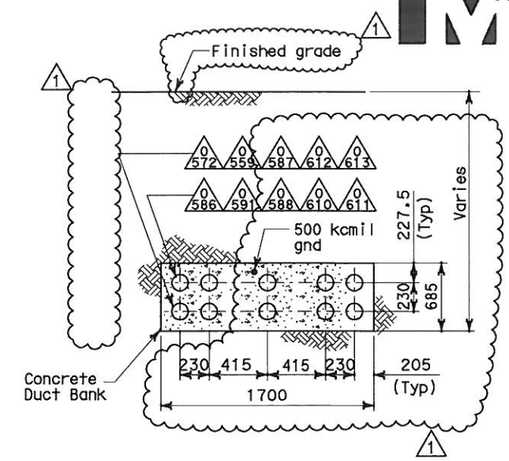

SECTION W-W
SCALE 1:20

NOTES:

1. References:
   - For duct bank and manhole plan, see sheet E-11.
   - For manhole plans and sections, see sheets E-14 through E-16.
   - For typical manhole and duct bank details, see sheet E-17.
   - For circuit and conduit/cable tray schedules, see sheets starting at E-401.
   - 1 For underground conduit duct bank reinforcing, see details on sheets E-19C and E-19D.
2. For other related work, not shown on this sheet, see Electrical Special Provisions.

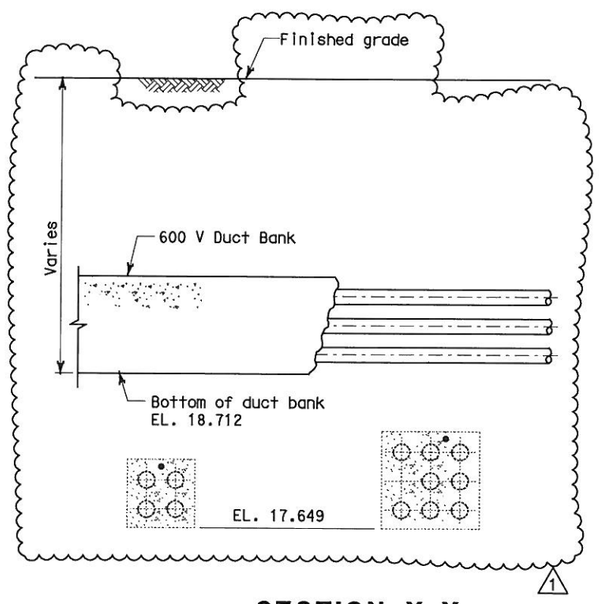

SECTION Y-Y
SCALE 1:20

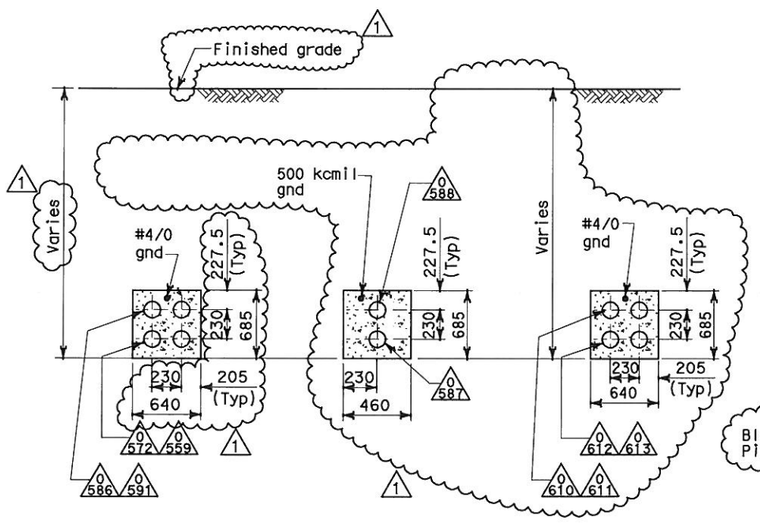

SECTION Z-Z
SCALE 1:20

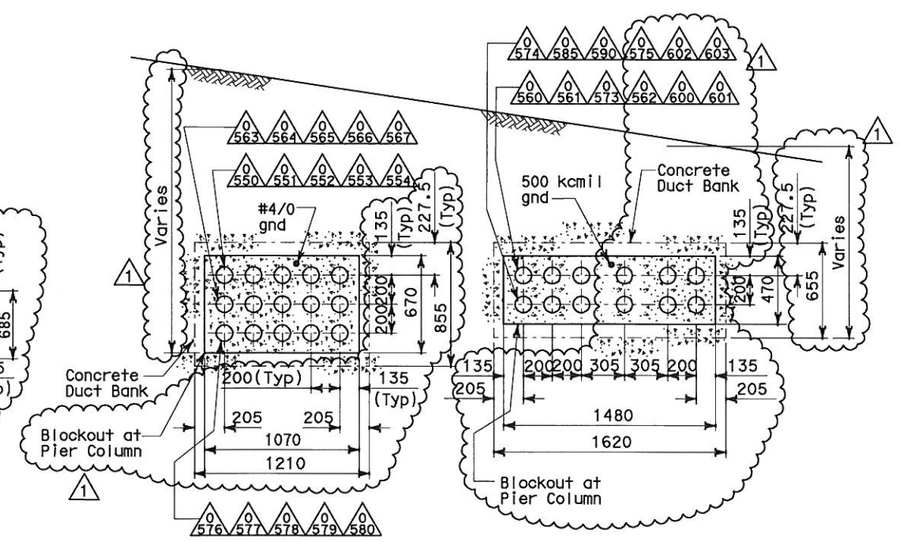

SECTION X-X
SCALE 1:20

REGISTERED PROFESSIONAL ENGINEER DAVID H. OTO No. 10699 Exp. 06/30/2013 ELECTRICAL STATE OF CALIFORNIA

FOR REVISION ONLY
1

REQUEST FOR INFORMATION NOT ADDRESSED IN THIS CCO REMAIN IN FORCE					
1	08/08/11	W2 DUCT BANKS REINFORCEMENT	TW	RG	205
MARK	DATE	DESCRIPTIONS	BY	CH'D	CCO#
REVISIONS					

CONTRACT CHANGE ORDER NO. 205
SHEET 14 OF 21

DETAILS
UNDERGROUND DUCT BANK SECTIONS
SCALE AS NOTED

E-19

THIS PLAN ACCURATE FOR ELECTRICAL WORK ONLY.

ALL DIMENSIONS ARE IN MILLIMETERS UNLESS OTHERWISE SHOWN

FOR REDUCED PLANS ORIGINAL SCALE IS IN MILLIMETERS 0 20 40 60 80

DGN FILE =>04-0120f1_0102R01.dgn
USERNAME =>llorico

CU 04251 | EA 0120F1

STATE OF CALIFORNIA - DEPARTMENT OF TRANSPORTATION
Caltrans
DESIGN OVERSIGHT BEHZAD GOLEMOHAMMADI
CALCULATED/DESIGNED BY | CHECKED BY
DATE | REVISED BY | DATE REVISED

LAST REVISION 00-00-00
DATE PLOTTED => 09-AUG-2011
TIME PLOTTED => 13:45

DIST	COUNTY	ROUTE	KILOMETER POST TOTAL PROJECT	SHEET No	TOTAL SHEETS
04	SF	80	13.2/13.9	102 S1	1204

REGISTERED ELECTRICAL ENGINEER 07/05/11 DATE

PLANS APPROVAL DATE

REGISTERED PROFESSIONAL ENGINEER DAVID H. OTO No. 10699 Exp. 06/30/2013 ELECTRICAL STATE OF CALIFORNIA

PB AMERICAS, Inc.
A Parsons Brinckerhoff Company
303 Second St., Suite 700N
San Francisco, CA 94107-1317

The State of California or its officers or agents shall not be responsible for the accuracy or completeness of electronic copies of this plan sheet.

Caltrans now has a web site! To get to the web site, go to http://www.dot.ca.gov

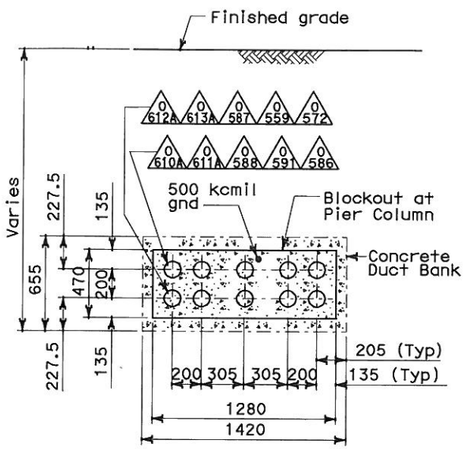

SECTION VV-VV
SCALE 1:20

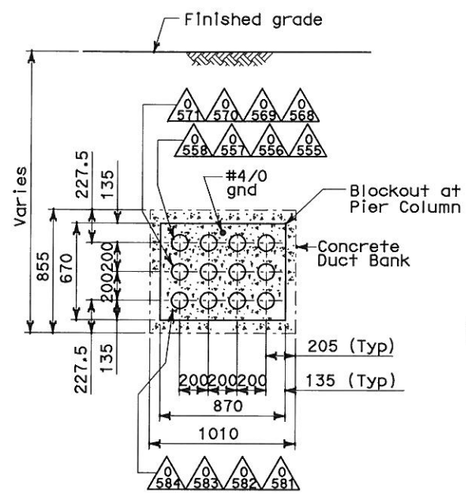

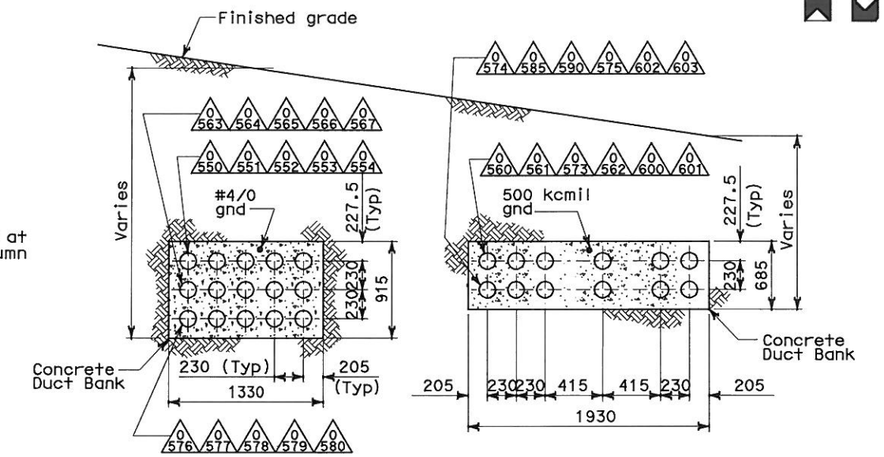

SECTION XX-XX
SCALE 1:20

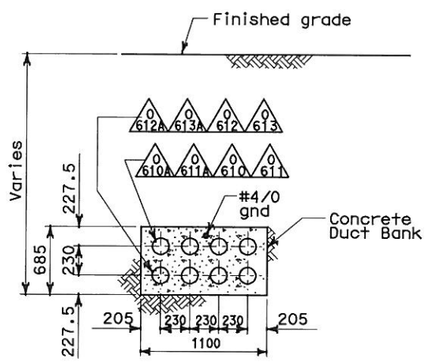

SECTION FF-FF
SCALE 1:20

NOTES:

1. References:
   - For duct bank and manhole plan, see sheet E-11.
   - For manhole plans and sections, see sheets E-14 through E-16.
   - For typical manhole and duct bank details, see sheet E-17.
   - For circuit and conduit/cable tray schedules, see sheets starting at E-401.
   - For underground conduit duct bank reinforcing, see details on sheets E-19C and E-19D.
2. For other related work, not shown on this sheet, see Electrical Special Provisions.

REQUEST FOR INFORMATION NOT ADDRESSED IN THIS CCO REMAIN IN FORCE

MARK	DATE	DESCRIPTIONS	BY	CH'D	CCO#
0	08/08/11	W2 DUCT BANKS REINFORCEMENT	TW	RG	205

REVISIONS

CONTRACT CHANGE ORDER NO. 205
SHEET 15 OF 21

DETAILS
UNDERGROUND DUCT BANK SECTIONS
SCALE AS NOTED

E-19A

REVISED BY	DATE REVISED
TW	07/11

CALCULATED/DESIGNED BY	TW
CHECKED BY	RG

DESIGN OVERSIGHT
BEHZAD GOLEMOHAMMADI

STATE OF CALIFORNIA - DEPARTMENT OF TRANSPORTATION
Caltrans

THIS PLAN ACCURATE FOR ELECTRICAL WORK ONLY.

ALL DIMENSIONS ARE IN MILLIMETERS UNLESS OTHERWISE SHOWN

FOR REDUCED PLANS ORIGINAL SCALE IS IN MILLIMETERS 0 20 40 60 80

DGN FILE =>04-0120f1_0102S01.dgn
USERNAME =>llorico

CU 04251

EA 0120F1

LAST REVISION 00-00-00

DATE PLOTTED => 09-AUG-2011
TIME PLOTTED => 13:46

DIST	COUNTY	ROUTE	KILOMETER POST TOTAL PROJECT	SHEET No	TOTAL SHEETS
04	SF	80	13.2/13.9	102S2 R2	1204

REGISTERED ELECTRICAL ENGINEER DATE 07/05/11

PLANS APPROVAL DATE

REGISTERED PROFESSIONAL ENGINEER DAVID H. OTO No. 10699 Exp. 06/30/2013 ELECTRICAL STATE OF CALIFORNIA

PB AMERICAS, Inc.
A Parsons Brinckerhoff Company
303 Second St., Suite 700N
San Francisco, CA 94107-1317

The State of California or its officers or agents shall not be responsible for the accuracy or completeness of electronic copies of this plan sheet.

Caltrans now has a web site! To get to the web site, go to http://www.dot.ca.gov

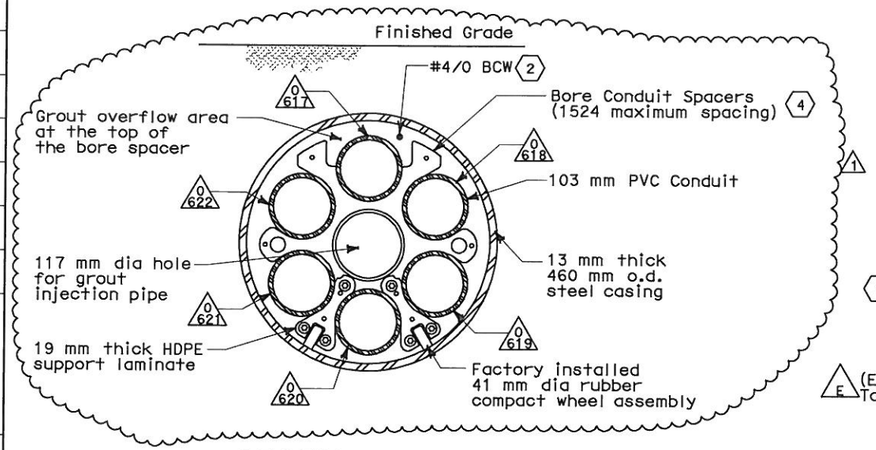

SECTION AA-AA
SCALE: 1:10

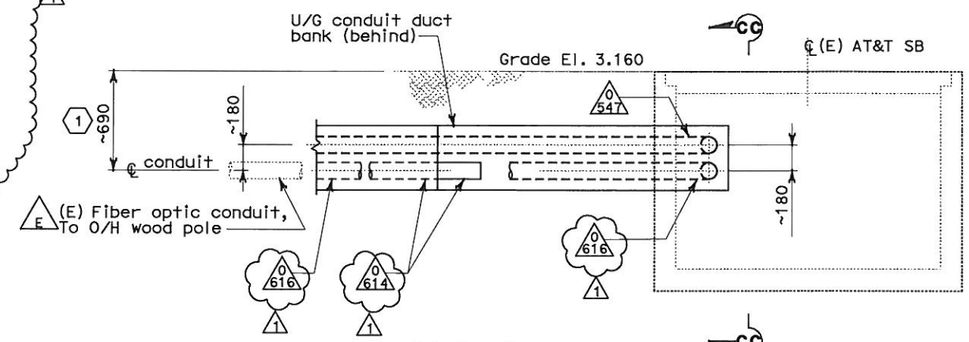

SECTION BB-BB
SCALE: 1:20

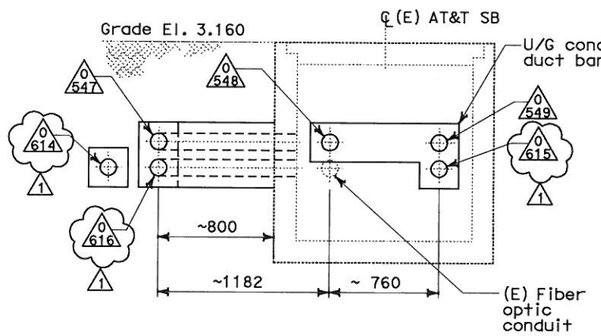

SECTION CC-CC
SCALE: 1:20

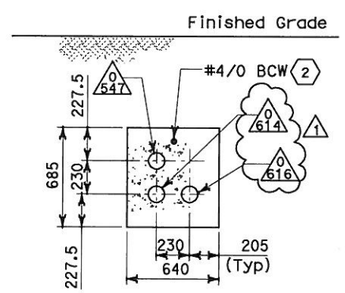

SECTION EE-EE
SCALE: 1:20

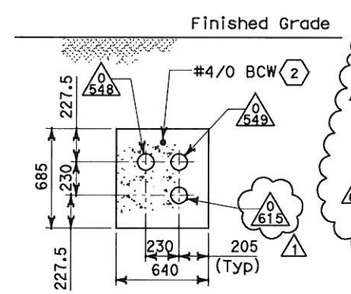

SECTION HH-HH
SCALE: 1:20

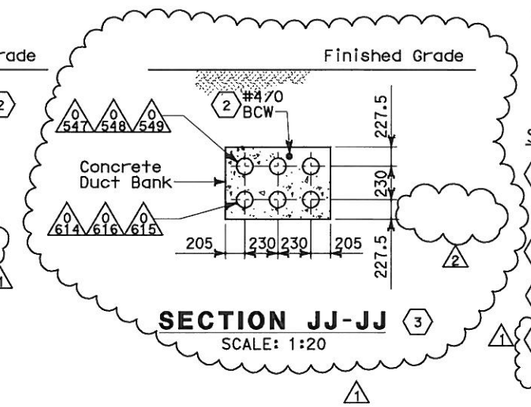

SECTION JJ-JJ
SCALE: 1:20

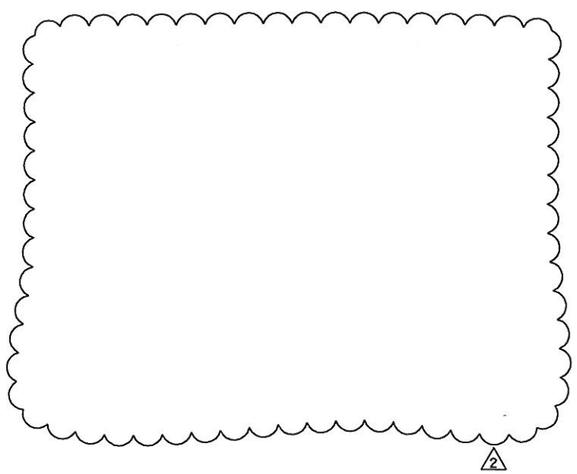

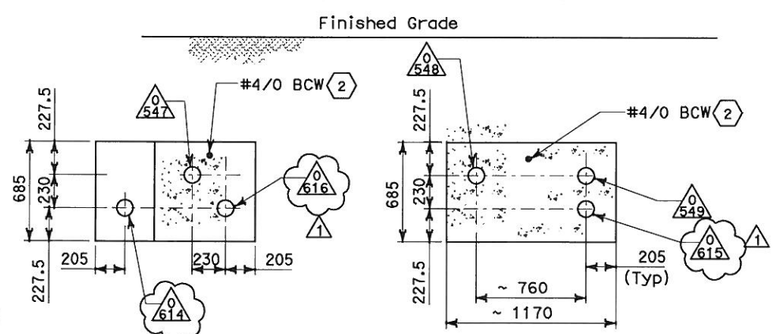

SECTION GG-GG
SCALE: 1:20

NOTES:

1. References:
   - For duct banks and manhole plan, see sheets E-11 and E-11A.
   - For typical manhole details, see sheet E-17.
   - For underground conduit duct bank reinforcing, see details on sheets U-4 and E-19D.
   - For circuit and conduit/cable tray schedules, see sheets starting at E-401
2. For other related work, not shown on this sheet, see Electrical Special Provisions.

SHEET NOTES:

(1) Dimensions shown (~) are field surveyed. The Contractor is to verify to ensure the existing conduit is the reference for the actual location of the new conduits.

(2) Connect ground ~~conductor to ground bar~~ inside manhole (and to conduit steel casing.)

(3) Refer to Sheet E-19D for structural details.

(4) For additional installation requirement not shown on this plan, refer to Underground Devices Inc. Cat. # BS3555W2 or approved equal.

REGISTERED PROFESSIONAL ENGINEER DAVID H. OTO No. 10699 Exp. 06/30/2013 ELECTRICAL STATE OF CALIFORNIA

FOR REVISION ONLY

REQUEST FOR INFORMATION NOT ADDRESSED IN THIS CCO REMAIN IN FORCE

MARK	DATE	DESCRIPTIONS	BY	CH'D	CCO#
2	04/05/12	W2 DUCT BANKS REINFORCEMENT	TW	RG	205
1	12/12/11	W2 DUCT BANKS REINFORCEMENT	MG TW	DO RG	205
0	08/17/11	W2 DUCT BANKS REINFORCEMENT	EJL TW	RG	205

REVISIONS

CONTRACT CHANGE ORDER NO. 205
SHEET 16 OF 21

DETAILS
UNDERGROUND DUCT BANK SECTIONS
SCALE: AS NOTED

E-19B

CALCULATED/DESIGNED BY	EL	DATE 07/11	REVISED BY
CHECKED BY	RG	07/11	DATE REVISED

DESIGN OVERSIGHT
BEHZAD GOLEMOHAMMADI

STATE OF CALIFORNIA - DEPARTMENT OF TRANSPORTATION
Caltrans

THIS PLAN ACCURATE FOR ELECTRICAL WORK ONLY.

ALL DIMENSIONS ARE IN MILLIMETERS UNLESS OTHERWISE SHOWN

FOR REDUCED PLANS ORIGINAL SCALE IS IN MILLIMETERS 0 20 40 60 80

DGN FILE =>04-0120F1_0102S02R02.dgn
USERNAME =>llorico

CU 04251 | EA 0120F1

LAST REVISION 00-00-00
DATE PLOTTED => 06-APR-2012
TIME PLOTTED => 09:57

DIST	COUNTY	ROUTE	KILOMETER POST TOTAL PROJECT	SHEET No	TOTAL SHEETS
04	SF	80	13.2/13.9	102 S3	1204

07/20/11
REGISTERED ELECTRICAL ENGINEER DATE

PLANS APPROVAL DATE

REGISTERED PROFESSIONAL ENGINEER LAWRENCE M. JOHNSON No. C44006 Exp. 6-30-13 CIVIL STATE OF CALIFORNIA

PB AMERICAS, Inc.
A Parsons Brinckerhoff Company
303 Second St., Suite 700N
San Francisco, CA 94107-1317

The State of California or its officers or agents shall not be responsible for the accuracy or completeness of electronic copies of this plan sheet.

Caltrans now has a web site! To get to the web site, go to http://www.dot.ca.gov

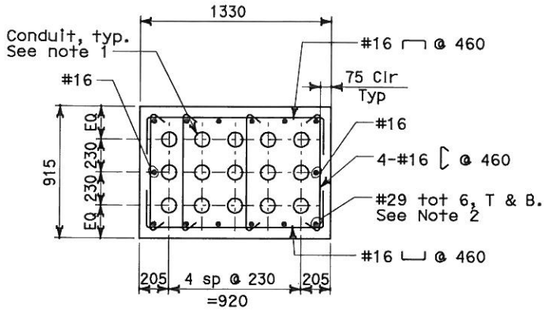

DETAIL 1
SCALE: 1:20

Note:
For Detail not noted or shown
see Section T-T on sheet E-19

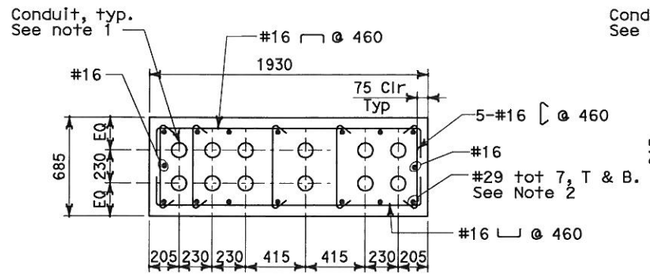

DETAIL 2
SCALE: 1:20

Note:
For Detail not noted or shown
see Section U-U on sheet E-19

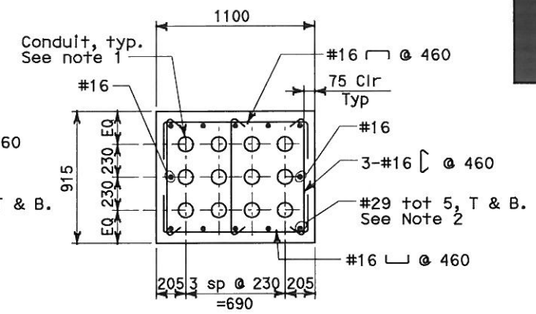

DETAIL 3
SCALE: 1:20

Note:
For Detail not noted or shown
see Section V-V on sheet E-19

NOTES:

1. For conduit duct bank sections, see sheet E-19, E-19A, E-19B and E-19C.
2. Where duct banks intersect, develop #29 top and bottom reinforcing a minimum distance of 1525 mm into adjacent duct bank.
3. The duct bank concrete compression strength at 28 days: f'c = 25 MPa.
4. The duct bank reinforcing bar yield strength: Fy = 414 MPa.
5. The duct banks have been designed for a maximum point load of 1330 kN distributed over a 1000mm x 1000mm area at the finished grade elevation.

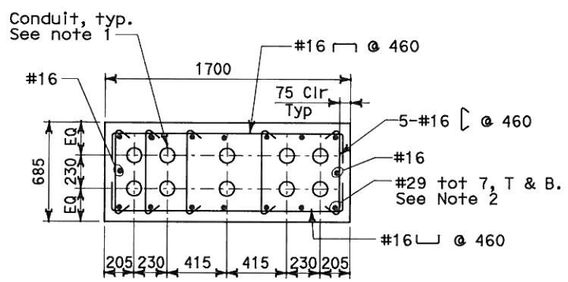

DETAIL 4
SCALE: 1:20

Note:
For Detail not noted or shown
see Section W-W on sheet E-19

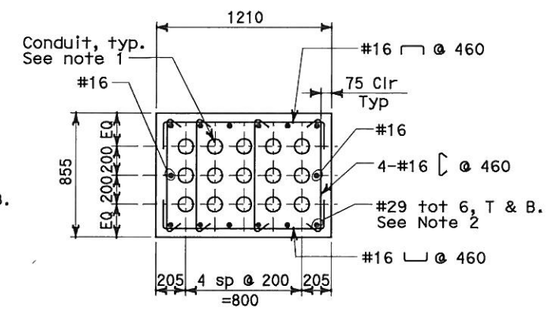

DETAIL 5
SCALE: 1:20

Notes:
A. For Detail not noted or shown
see Section X-X on sheet E-19
B. Locate 1st stirrup 75mm from
face of pier.

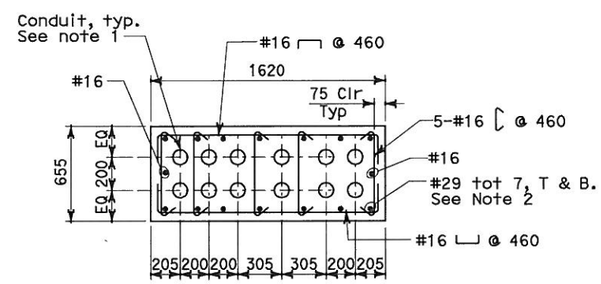

DETAIL 6
SCALE: 1:20

Notes:
A. For Detail not noted or shown
see Section X-X on sheet E-19
B. Locate 1st stirrup 75mm from
face of pier.

REQUEST FOR INFORMATION NOT ADDRESSED IN THIS CCO REMAIN IN FORCE					
0	08/08/11	W2 DUCT BANKS REINFORCEMENT	LJ	RG	205
MARK	DATE	DESCRIPTIONS	BY	CH'D	CCO#
		REVISIONS			

CONTRACT CHANGE ORDER NO. 205
SHEET 17 OF 21

DETAILS
UNDERGROUND DUCT BANK SECTIONS
SCALE AS NOTED

E-19C

REVISED BY	DATE REVISED

CALCULATED/DESIGNED BY	DATE 07/11
LJ	
CHECKED BY	

DESIGN OVERSIGHT
BEHZAD GOLEMOHAMMADI

STATE OF CALIFORNIA - DEPARTMENT OF TRANSPORTATION
Caltrans

THIS PLAN ACCURATE FOR ELECTRICAL WORK ONLY.

ALL DIMENSIONS IN MILLIMETERS UNLESS OTHERWISE SHOWN

FOR REDUCED PLANS ORIGINAL SCALE IS IN MILLIMETERS 0 20 40 60 80

DGN FILE =>04-0120f1_0102S03.dgn
USERNAME =>llorico

CU 04251

EA 0120F1

LAST REVISION 00-00-00
DATE PLOTTED => 09-AUG-2011
TIME PLOTTED => 13:46

DIST	COUNTY	ROUTE	KILOMETER POST TOTAL PROJECT	SHEET No	TOTAL SHEETS
04	SF	80	13.2/13.9	102 S4R1	1204

REGISTERED ELECTRICAL ENGINEER — 07/20/11 DATE

PLANS APPROVAL DATE

REGISTERED PROFESSIONAL ENGINEER — LAWRENCE M. JOHNSON No. C44006 Exp. 6-30-13 CIVIL STATE OF CALIFORNIA

PB AMERICAS, Inc.
A Parsons Brinckerhoff Company
303 Second St., Suite 700N
San Francisco, CA 94107-1317

The State of California or its officers or agents shall not be responsible for the accuracy or completeness of electronic copies of this plan sheet.

Caltrans now has a web site! To get to the web site, go to http://www.dot.ca.gov

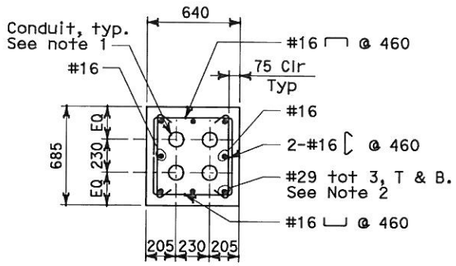

DETAIL 7
SCALE: 1:20

Note:
For Detail not noted or shown
see Section Z-Z on sheet E-19

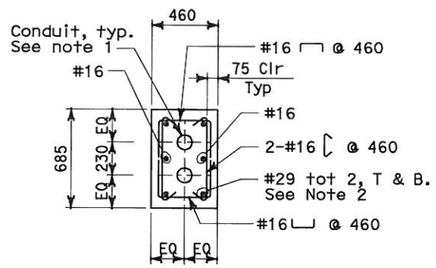

DETAIL 8
SCALE: 1:20

Note:
For Detail not noted or shown
see Section Z-Z on sheet E-19

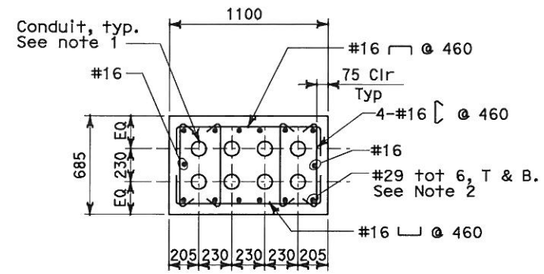

DETAIL 9
SCALE: 1:20

Note:
For Detail not noted or shown
see Section FF-FF on sheet E-19A

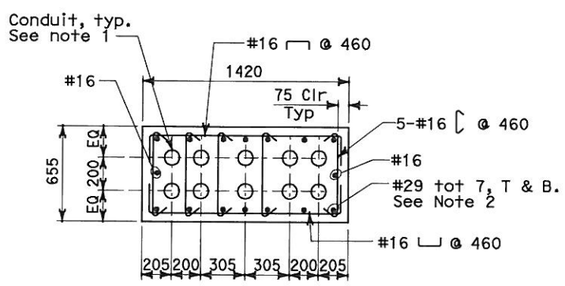

DETAIL 10
SCALE: 1:20

Note:
A. For Detail not noted or shown
see Section VV-VV on sheet E-19A.
B. Locate 1st stirrups 75mm from
face of pier.

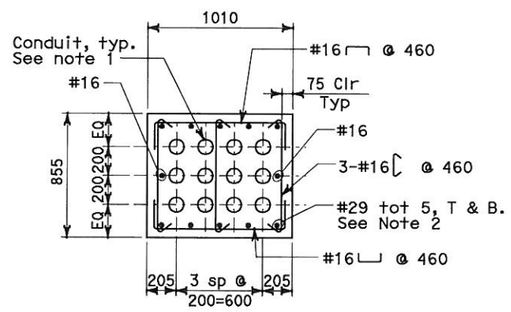

DETAIL 11
SCALE: 1:20

Note:
A. For Detail not noted or shown
see Section VV-VV on sheet E-19A.
B. Locate 1st stirrups 75mm from
face of pier.

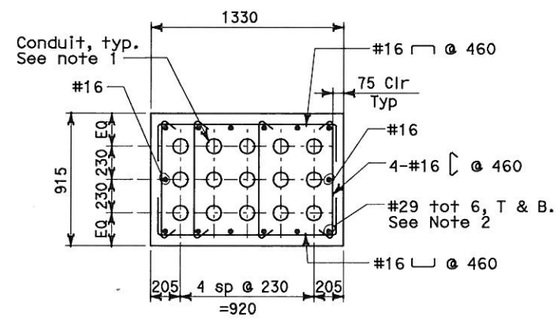

DETAIL 12
SCALE: 1:20

Note:
For Detail not noted or shown
see Section XX-XX on sheet E-19A

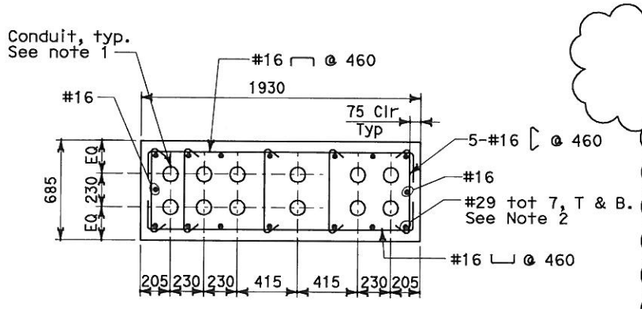

DETAIL 13
SCALE: 1:20

Note:
For Detail not noted or shown
see Section XX-XX on sheet E-19A

1

REGISTERED PROFESSIONAL ENGINEER — DAVID H. OTO No. 10699 Exp. 06/30/2013 ELECTRICAL STATE OF CALIFORNIA

FOR REVISION ONLY
1

NOTES:

1. For conduit duct bank sections, see sheet E-19, E-19A, E-19B and E-19C.
2. Where duct banks intersect, develop #29 top and bottom reinforcing a minimum distance of 1525 mm into adjacent duct bank.
3. The duct bank concrete compression strength at 28 days: f'c = 25 MPa.
4. The duct bank reinforcing bar yield strength: Fy = 414 MPa.
5. The duct banks have been designed for a maximum point load of 1330 kN distributed over a 1000mm x 1000mm area at the finished grade elevation.

REQUEST FOR INFORMATION NOT ADDRESSED IN THIS CCO REMAIN IN FORCE

MARK	DATE	DESCRIPTIONS	BY	CH'D	CCO#
1	04/05/12	W2 DUCT BANKS REINFORCEMENT	TW	RG	205
0	08/08/11	W2 DUCT BANKS REINFORCEMENT	LJ	RG	205

REVISIONS

CONTRACT CHANGE ORDER NO. 205
SHEET 18 OF 21

DETAILS
UNDERGROUND DUCT BANK SECTIONS
SCALE AS NOTED

E-19D

REVISED BY	DATE REVISED

CALCULATED/DESIGNED BY	LJ	DATE 07/11
CHECKED BY		

DESIGN OVERSIGHT
BEHZAD GOLEMOHAMMADI

STATE OF CALIFORNIA - DEPARTMENT OF TRANSPORTATION
Caltrans

THIS PLAN ACCURATE FOR ELECTRICAL WORK ONLY.

ALL DIMENSIONS IN MILLIMETERS UNLESS OTHERWISE SHOWN

FOR REDUCED PLANS ORIGINAL SCALE IS IN MILLIMETERS 0 20 40 60 80

DGN FILE =>04-0120f1_0102S04R01.dgn
USERNAME =>liorico

CU 04251 | EA 0120F1

LAST REVISION 00-00-00
DATE PLOTTED => 06-APR-2012
TIME PLOTTED => 10:24

DIST	COUNTY	ROUTE	KILOMETER POST TOTAL PROJECT	SHEET No	TOTAL SHEETS
04	SF	80	13.2/13.9	105 R3	1204

REGISTERED ELECTRICAL ENGINEER 12/19/02 DATE

12-6-04
PLANS APPROVAL DATE

REGISTERED PROFESSIONAL ENGINEER JENS ERLINGSSON No. 8249 Exp. 9/30/06 ELECTRICAL STATE OF CALIFORNIA

PB AMERICAS, Inc.
A Parsons Brinckerhoff Company
303 Second St., Suite 700N
San Francisco, CA 94107-1317

The State of California or its officers or agents shall not be responsible for the accuracy or completeness of electronic copies of this plan sheet.

Caltrans now has a web site! To get to the web site, go to http://www.dot.ca.gov

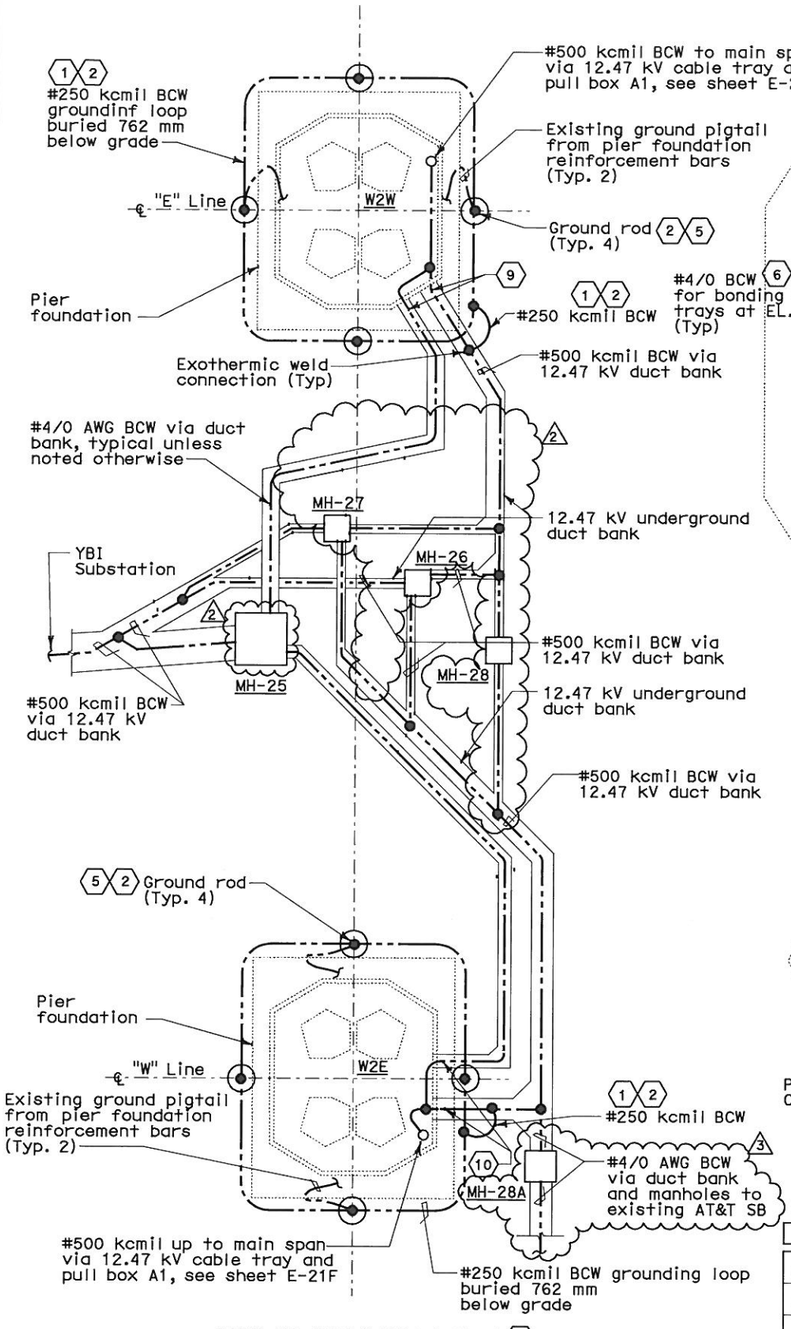

PIER W2 FOUNDATION PLAN 11

DETAIL 1

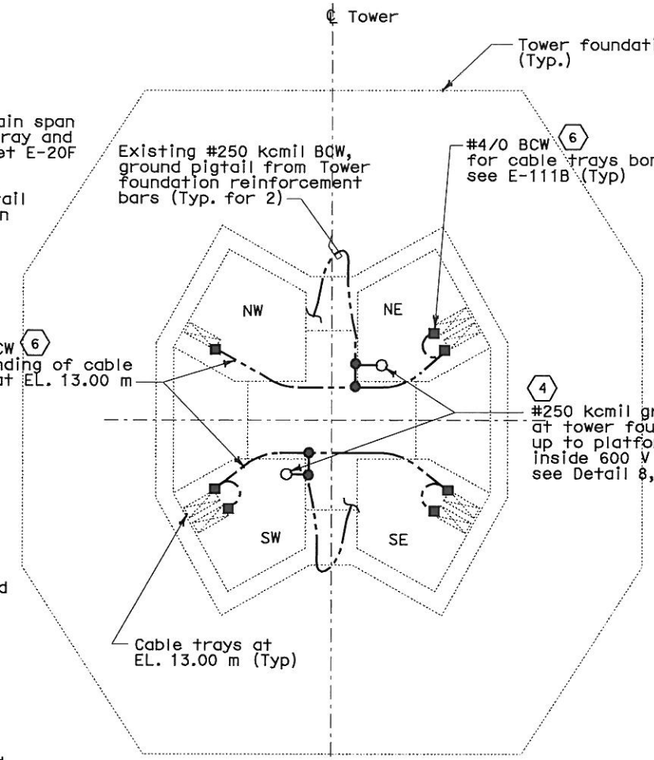

TOWER FOUNDATION PLAN

DETAIL 2

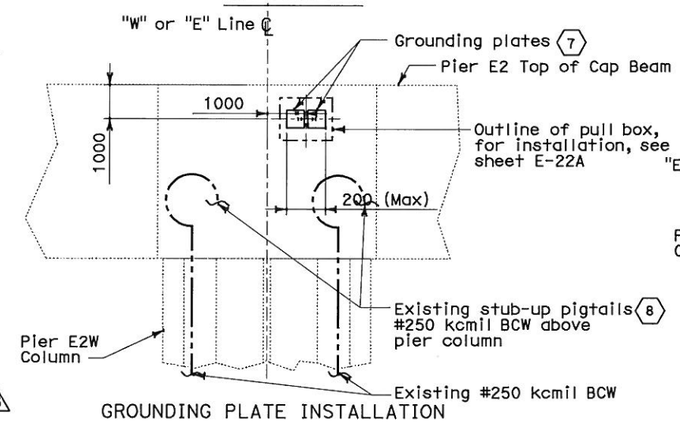

GROUNDING PLATE INSTALLATION

SECTION A-A

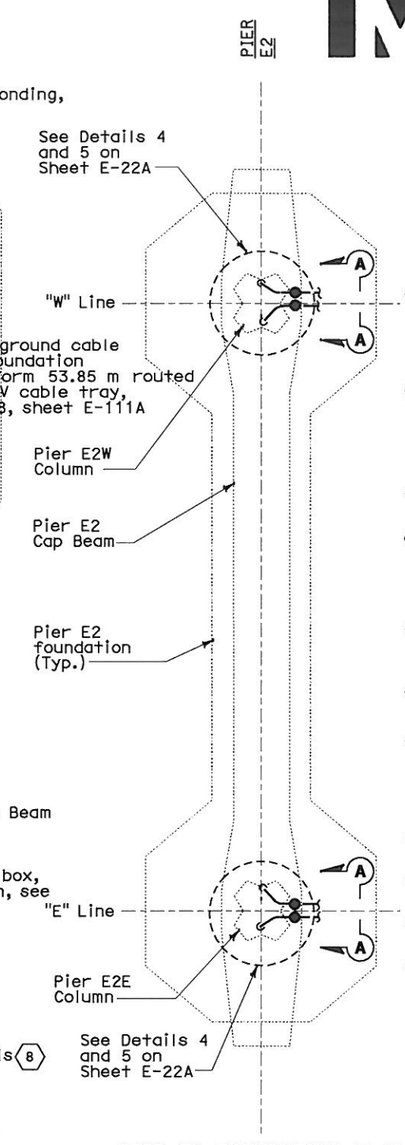

PIER E2 FOUNDATION PLAN

DETAIL 3

SHEET NOTES:

1. Tie the underground duct bank #500 kcmil Bare Copper Wire (BCW) system grounding conductor to the W2E and W2W pier foundations. See W2 contract 04-0120C4 for limited scope of work.
2. Route the #250 kcmil grounding conductors around the W2W and connect to the new grounding rods. This grounding loop shall be exothermically connected to the #500 kcmil main ground conductor at the pier. This is typical for pier W2E.
3. Not used.
4. Main tower foundation ground conductors shall be routed vertically up to platform 53.85 m via 600V cable trays inside SW and NE tower quadrants and tied exothermically to the #500 kcmil main ground conductor.
5. Ground rod shall be copper clad, 19 mm diameter and 3048 mm long.
6. Bond all the cable trays to the ground loop at Tower elevation 13 m.
7. Install two grounding plates, Thermoweld Type CR-27 Cat. #38-4533-6B or equal (sized for #250 kcmil BCW with 305mm pigtail). Grounding plates shall be embedded at east face side of the pier E2 cap beam.
8. For connection of stub-up #250 kcmil BCW to grounding plates, see sheet E-22A.
9. See Detail 1, sheet E-22B for grounding installation through pier pit wall.
10. See Detail 2, sheet E-22B for grounding installation through pier pit wall.
11. Pier grounding system must be verified and tested for ground resistance prior to tie-in to #500 kcmil main ground conductor. Perform tests, by the fall-of-potential method according to IEEE-81. Contractor shall submit a test plan and procedure for Engineer's approval. Test results shall be submitted to the Engineer for evaluation and approval.

ORIGINAL SHEET SUPERCEDED

REQUEST FOR INFORMATION NOT ADDRESSED IN THIS CCO REMAIN IN FORCE.

MARK	DATE	DESCRIPTIONS	BY	CH'D	CCO#
3	12/12/11	W2 DUCT BANKS REINFORCEMENT	TW	RG	205
2	08/08/11	W2 DUCT BANKS REINFORCEMENT	TW	RG	205
1	11/20/09	ELECTRICAL GROUNDING	RR AWG	RG FE	75

REVISIONS

CONTRACT CHANGE ORDER NO. 205
SHEET 19 OF 21

REGISTERED PROFESSIONAL ENGINEER FADI WALIEDDINE No. 11465 Exp. 12/31/2009 ELECTRICAL STATE OF CALIFORNIA
FOR REVISION ONLY 1

REGISTERED PROFESSIONAL ENGINEER DAVID H. OTO No. 10699 Exp. 06/30/2013 ELECTRICAL STATE OF CALIFORNIA
FOR REVISION ONLY 2 3

DETAILS
UNDERGROUND FOUNDATION GROUNDING
NO SCALE

E-22

STATE OF CALIFORNIA - DEPARTMENT OF TRANSPORTATION
Caltrans

DESIGN OVERSIGHT: BEHZAD GOLEMOHAMMADI

CALCULATED/DESIGNED BY: KG — DATE 11/01 — REVISED BY
CHECKED BY: PF — 12/01 — DATE REVISED

THIS PLAN ACCURATE FOR ELECTRICAL WORK ONLY.

ALL DIMENSIONS ARE IN MILLIMETERS UNLESS OTHERWISE SHOWN

FOR REDUCED PLANS ORIGINAL SCALE IS IN MILLIMETERS 0 20 40 60 80

DGN FILE =>04-0120f1_0105R03.dgn
USERNAME =>llorico

CU 04251 | EA 0120F1

LAST REVISION 00-00-00 | DATE PLOTTED => 06-APR-2012 | TIME PLOTTED => 09:57

DIST	COUNTY	ROUTE	KILOMETER POST TOTAL PROJECT	SHEET No	TOTAL SHEETS
04	SF	80	13.2/13.9	106 R4	1204

REGISTERED ELECTRICAL ENGINEER 12/19/02 DATE

12-6-04
PLANS APPROVAL DATE

REGISTERED PROFESSIONAL ENGINEER JENS ERLINGSSON No. 8249 Exp. 9/30/06 ELECTRICAL STATE OF CALIFORNIA

PB POWER, Inc.
A Parsons Brinckerhoff Company
303 Second St., Suite 700N
San Francisco, CA 94107-1317

The State of California or its officers or agents shall not be responsible for the accuracy or completeness of electronic copies of this plan sheet.

Caltrans now has a web site! To get to the web site, go to http://www.dot.ca.gov

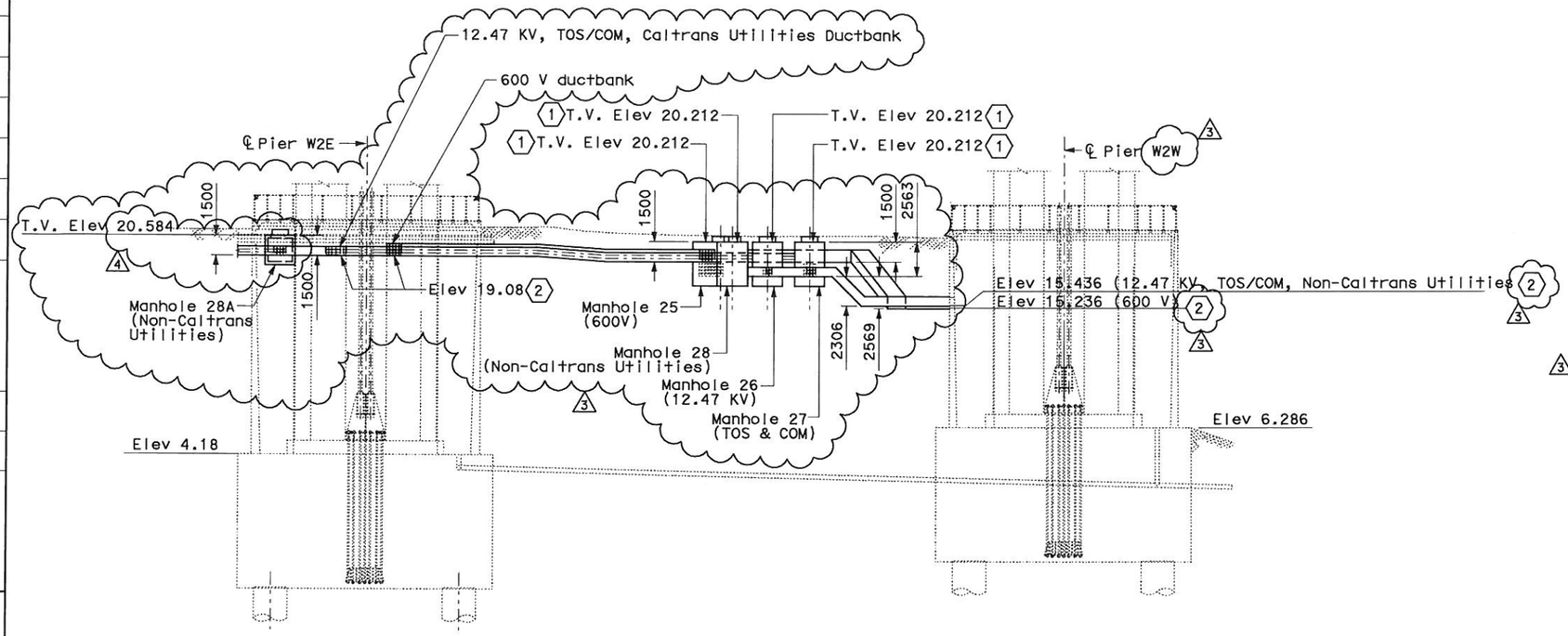

SECTION A-A

(Reference E-11)
SCALE 1:200

SHEET NOTES:

1. Contractor to verify finished grade and may make necessary adjustment to the specified top of manhole elevations and ductbanks to suit field condition.
2. Specified elevations are for blockout openings on Pier columns. See structure plan sheets.

NOTES:

1. References:
   - For duct banks and sections, see sheet E-11.
   - For typical manhole and duct bank details, see sheet E-17
   - For duct bank sections see sheet E-19
   - For pier W2W sections and plans, see sheet E-20F
   - For pier W2E sections and plans, see sheet E-21F
   - For circuit and conduit/cable tray schedules, see sheets starting at E-401.
2. For other related work, not shown on this sheet, see Electrical Special Provisions.

ABBREVIATION:

T.V. - Top of Vault

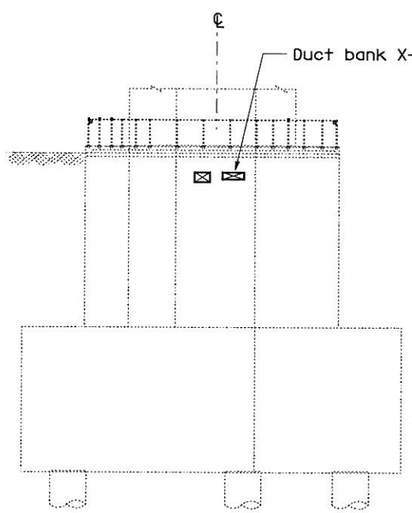

SECTION B-B

SCALE 1:200

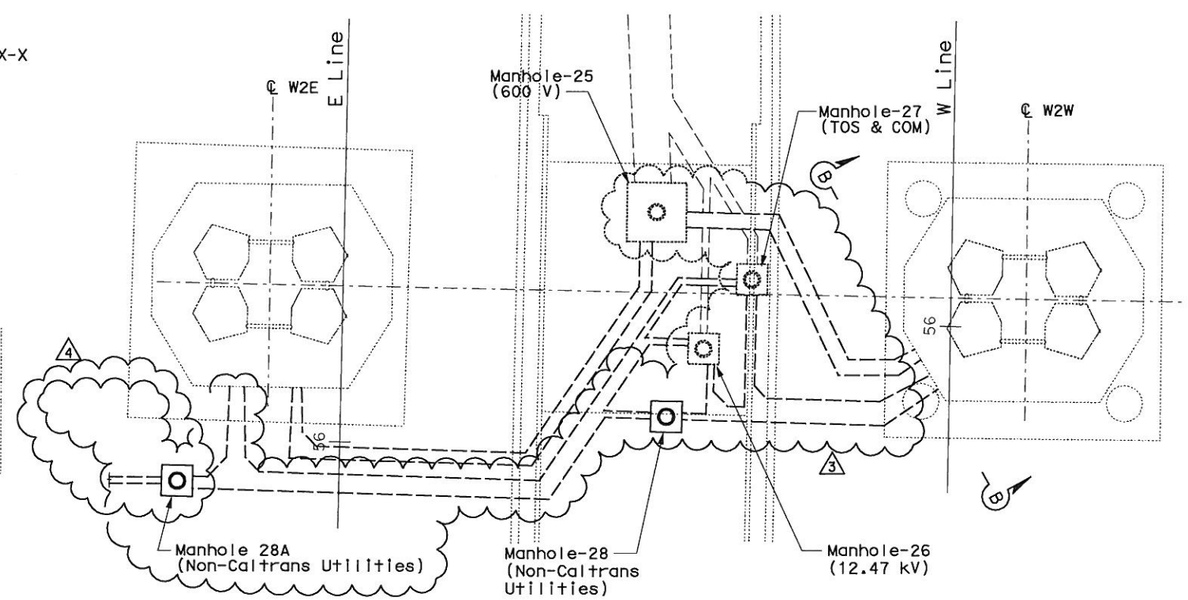

PLAN

SCALE 1:200

REGISTERED PROFESSIONAL ENGINEER DAVID H. OTO No. 10699 Exp. 06/30/2013 ELECTRICAL STATE OF CALIFORNIA — FOR REVISION ONLY 3 4

REGISTERED PROFESSIONAL ENGINEER S. A. ESTOQUE, JR. No. E-10151 Exp. 12/31/2008 ELECTRICAL STATE OF CALIFORNIA — FOR REVISION ONLY 1

REGISTERED PROFESSIONAL ENGINEER FADI WALIEDDINE No. 11465 Exp. 12/31/2009 ELECTRICAL STATE OF CALIFORNIA — FOR REVISION ONLY 2

REQUEST FOR INFORMATION NOT ADDRESSED IN THIS CCO REMAIN IN FORCE

MARK	DATE	DESCRIPTIONS	BY	CH'D	CCO#
4	04/05/12	W2 DUCT BANKS REINFORCEMENT	RR	RG	205
3	08/08/11	W2 DUCT BANKS REINFORCEMENT	RR	RG	205
2	11/20/09	ELECTRICAL GROUNDING	RR	RG FW	75
1	02/25/08	CABLE TRAY CHANGES	TW	SE	42S1

REVISIONS

CONTRACT CHANGE ORDER NO. 205
SHEET 20 OF 21

DETAILS
UNDERGROUND DUCT BANK SECTIONS

SCALE 1:200

E-23

THIS PLAN IS ACCURATE FOR ELECTRICAL WORK ONLY.

ALL DIMENSIONS ARE IN MILLIMETERS UNLESS OTHERWISE SHOWN

FOR REDUCED PLANS ORIGINAL SCALE IS IN MILLIMETERS 0 20 40 60 80

DGN FILE =>04-0120f1_0106R04.dgn
USERNAME =>llorico

CU 04251 | EA 0120F1

STATE OF CALIFORNIA - DEPARTMENT OF TRANSPORTATION
Caltrans

DESIGN OVERSIGHT: BEHZAD GOLEMOHAMMADI

CALCULATED/DESIGNED BY	AB	DATE 11/04	REVISED BY	DATE REVISED
CHECKED BY	--	--/--		

LAST REVISION 00-00-00
DATE PLOTTED => 05-APR-2012
TIME PLOTTED => 17:27

DIST	COUNTY	ROUTE	KILOMETER POST TOTAL PROJECT	SHEET No	TOTAL SHEETS
04	SF	80	13.2/13.9	407 S17R2	1204

REGISTERED ELECTRICAL ENGINEER 07/05/11 DATE

PLANS APPROVAL DATE

REGISTERED PROFESSIONAL ENGINEER DAVID H. OTO No. 10699 Exp. 06/30/2013 ELECTRICAL STATE OF CALIFORNIA

PB AMERICAS, Inc.
A Parsons Brinckerhoff Company
303 Second St., Suite 700N
San Francisco, CA 94107-1317

The State of California or its officers or agents shall not be responsible for the accuracy or completeness of electronic copies of this plan sheet.

Caltrans now has a web site! To get to the web site, go to http://www.dot.ca.gov

Caltrans Metric

REGISTERED PROFESSIONAL ENGINEER DAVID H. OTO No. 10699 Exp. 06/30/2013 ELECTRICAL STATE OF CALIFORNIA

FOR REVISION ONLY △1 △2

REQUEST FOR INFORMATION NOT ADDRESSED IN THIS CCO REMAIN IN FORCE

MARK	DATE	DESCRIPTIONS	BY	CH'D	CCO#
△2	04/05/12	W2 DUCT BANKS REINFORCEMENT	TW	RG	205
△1	12/12/11	W2 DUCT BANKS REINFORCEMENT	DO TW	EJL RG	205
△0	08/08/11	W2 DUCT BANKS REINFORCEMENT	EJL	RG	205

REVISIONS

CONTRACT CHANGE ORDER NO. 205
SHEET 21 OF 21

CONDUIT DATA

Conduit No	Reference	Size	Type	Total Fill (mm2)	Allowable Fill (mm2)	Included Cable No.	Conductor Type
~~0541~~							△2
~~0542~~							
~~0543~~							
~~0544~~							
~~0545~~							
~~0546~~							
0547	E-11A,-15A,-15B E-19B	103	Schedule 40 PVC Conduit		3324.51	Pull rope	Soft-fiber Polyester
0548	E-11A,-15A,-15B E-19B	103	Schedule 40 PVC Conduit		3324.51	Pull rope	Soft-fiber Polyester
0549	E-11A,-15A,-15B E-19B	103	Schedule 40 PVC Conduit		3324.51	Pull rope	Soft-fiber Polyester
0614 △1	E-11A,-15A,-15B E-19B	103	Schedule 40 PVC Conduit		3324.51	Pull rope	Soft-fiber Polyester
0615 △1	E-11A,-15A,-15B E-19B	103	Schedule 40 PVC Conduit		3324.51	Pull rope	Soft-fiber Polyester
0616 △1	E-11A,-15A,-15B E-19B	103	Schedule 40 PVC Conduit		3324.51	Pull rope	Soft-fiber Polyester
0610A	E-11,-15A,-19A	103	RGS Conduit		3324.51	Pull rope	Soft-fiber Polyester
0611A	E-11,-15A,-19A	103	RGS Conduit		3324.51	Pull rope	Soft-fiber Polyester
0612A	E-11,-15A,-19A	103	RGS Conduit		3324.51	Pull rope	Soft-fiber Polyester
0613A	E-11,-15A,-19A	103	RGS Conduit		3324.51	Pull rope	Soft-fiber Polyester

CONDUIT DATA

Conduit No	Reference	Size	Type	Total Fill (mm)	Allowable Fill (mm)	Included Cable No.	Conductor Type
0617	E-15A,-15B	103	Schedule 40 PVC Conduit		3324.51	Pull rope	Soft-fiber Polyester
							△1
0618	E-15A,-15B	103	Schedule 40 PVC Conduit		3324.51	Pull rope	Soft-fiber Polyester
0619	E-15A,-15B	103	Schedule 40 PVC Conduit		3324.51	Pull rope	Soft-fiber Polyester
0620	E-15A,-15B	103	Schedule 40 PVC Conduit		3324.51	Pull rope	Soft-fiber Polyester
0621	E-15A,-15B	103	Schedule 40 PVC Conduit		3324.51	Pull rope	Soft-fiber Polyester
0622	E-15A,-15B	103	Schedule 40 PVC Conduit		3324.51	Pull rope	Soft-fiber Polyester

CONDUIT AND TRAY SCHEDULE

E-449DN

DATE	REVISED BY	DATE REVISED
XXX	XXX	XXX
XXX	XXX	XXX

CALCULATED/DESIGNED BY XXX XXX
CHECKED BY XXX XXX

DESIGN OVERSIGHT
BEHZAD GOLEMOHAMMADI

STATE OF CALIFORNIA - DEPARTMENT OF TRANSPORTATION
Caltrans

LAST REVISION 00-00-00
DATE PLOTTED => 05-APR-2012
TIME PLOTTED => 17:27

FOR REDUCED PLANS ORIGINAL SCALE IS IN MILLIMETERS 0 20 40 60 80

DGN FILE =>04-0120f1_0407S17R02.dgn
USERNAME =>llorico

CU 04251 | EA 0120F1