DIST	COUNTY	ROUTE	KILOMETER POST TOTAL PROJECT	SHEET No	TOTAL SHEETS
04	SF	80	13.2/13.9	69R3	1204

Robert E. Bethel
REGISTERED MECHANICAL ENGINEER

12-6-04
PLANS APPROVAL DATE

REGISTERED PROFESSIONAL ENGINEER ROBERT E. BETHEL No. M018543 Exp. 9/30/06 MECHANICAL STATE OF CALIFORNIA

T.Y. LIN / MOFFATT & NICHOL
825 BATTERY STREET
SAN FRANCISCO, CA 94111

The State of California or its officers or agents shall not be responsible for the accuracy or completeness of electronic copies of this plan sheet.

Caltrans now has a web site! To get to the web site, go to: http://www.dot.ca.gov

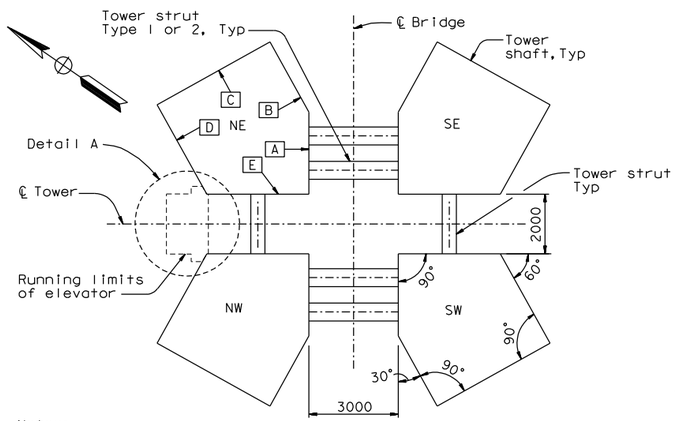

PLAN
1:100

Notes:
1. For longitudinal elevation looking North see "Elevator Detail No. 2" Sheet.

LEGEND:
NE Northeast tower shaft designation
A Tower shaft skin plate designation

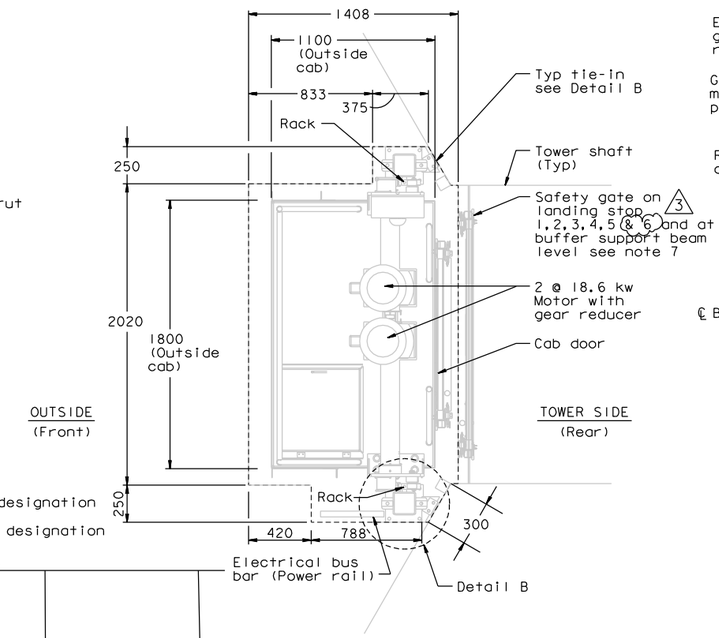

DETAIL A
1:20

NOTES:
1. Elevator to be USA Hoist Co., Inc. model 2000 DR, or approved equal, USA Hoist model 2000 DR shown.
2. Elevator to pass through running limits shown.
3. Elevator minimum clear inside dimensions shall be approximately 1676 wide x 965 deep x 2590 high.
4. Design wind velocity 190 km/hr at bridge deck.
5. Elevator minimum door size shall be 1475 wide x 2438 high.
6. Elevator guide rail mast shall attach to tower shaft NE & NW skin plate D only at the locations shown in Detail B. No supports, bracing or drive mechanisms are permitted between tower shafts.
7. For safety gate details see Special Provisions.

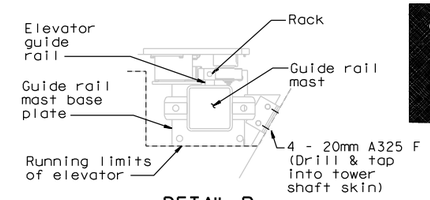

DETAIL B
(Plan Typ. Tie-In)
3048 max. Spacing
1:10

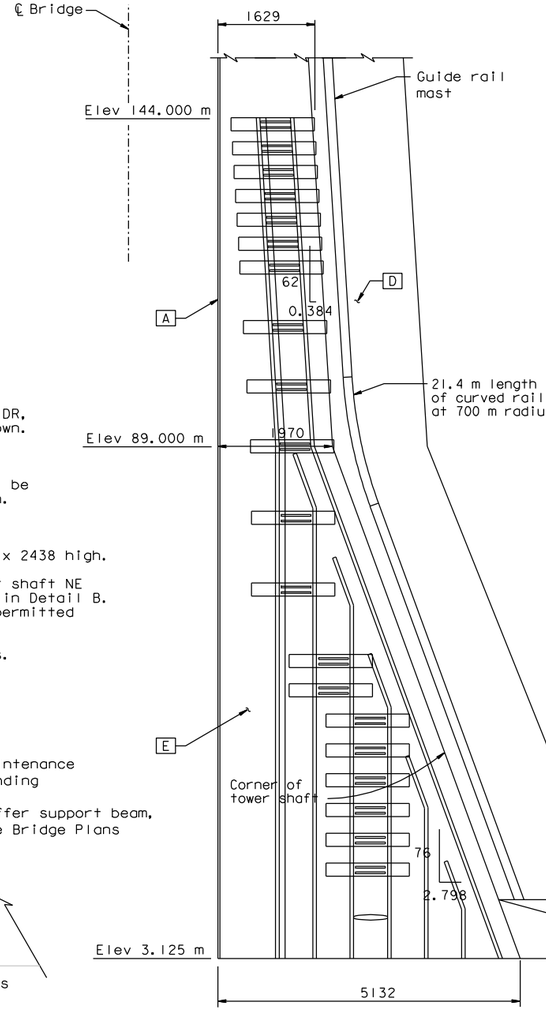

GUIDE RAIL GEOMETRY DEFINITION
Horiz=1:50
Vert =1:500

GENERAL DATA	
Model	2000 DR (USA Hoist Co.)
Classification	Rack & Pinion Elevator
Capacity	907 Kg
Speed	0.76 m/s
Car Weight	2948 Kg
Operation	Single Automatic Operation
Landing Served	1, 2, 3, 4, 5 & 6 3
Car & Hoistway Enclosure	
Car Safety	Rack & Pinion
Car/Hoistway Doors	Single vertical sliding panel /sliding door
Car Flooring/Roof	Aluminum Tread Plate
Car Walls-Exterior and Interior	Galvanized - G90 MCU Primer with Polysiloxane Top Coat (White) or Equal
Car Sled	Hot Dipped Galvanized
Car Glass Panels	Laminated Glass
Tower Tie-In	Hot Dipped Galvanized
Base Enclosure	Galvanized - G90
Buffer/Stroke	Spring Buffer/127 or Hydraulic Buffer/229
Governor/Trip Speed	210 fpm / 1.07 m/s
Machine Data	
Motor/Gear Box/Brake	90 Helical Bevel
Motor Kw	(2) 25HP / 18.6 Kw (Max Amp Operating Load Req. - 56.2)
Power Supply	480 Volts 100 A. 3 ph 60 Cy.
Guide Rail Mast (2 Each)	
Mast Section	TS 152 x 152 x 7.9 - A 500 Grade B
Mast Section Finish	Hot Dipped Galvanized
Mast Weight	113.4 Kg
Rack Material	AISI 1045 or Equiv.

Vertical Loads At Bottom Of Guide Rail Masts (KN)		
	Per Mast	Per Buffer
Load Case 1 (Safety Set)	118.50	0
Load Case 2 (Buffer Impact)	127.29	63.65
Load Case 3	168.20	
Seismic (1g)		0

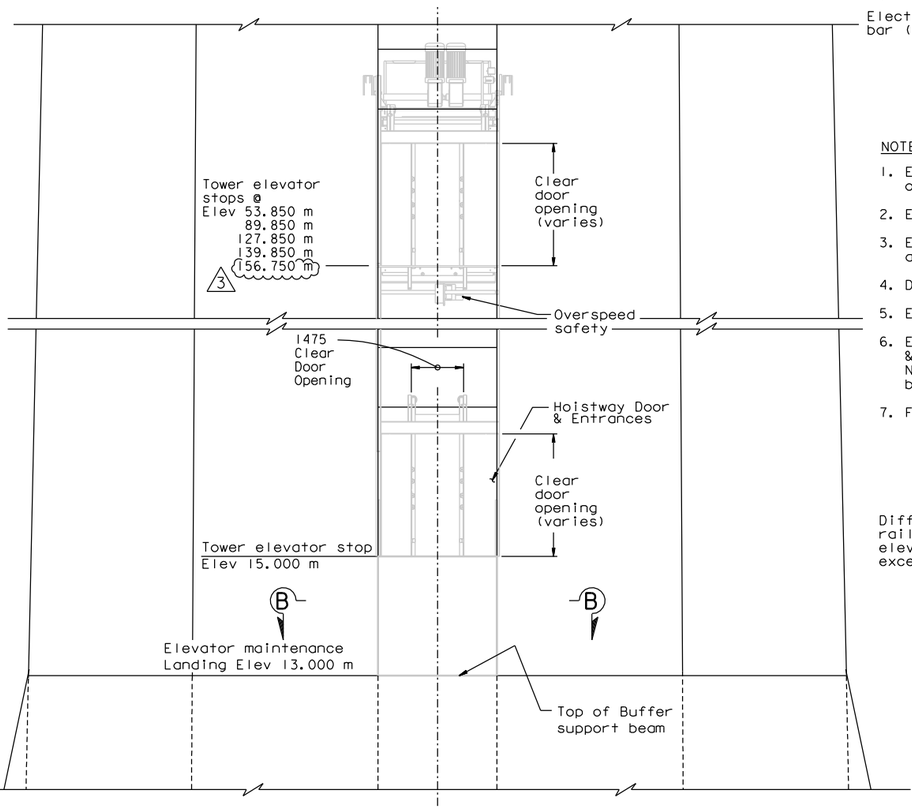

TOWER SIDE (CAB REAR) ELEVATION
Not To Scale

NOTES:
1. For tower shaft details, see Bridge Plans.
2. The elevator guide rail mast runs along the edge of tower shaft skin plate D
3. Details shown are for illustrative purposes only. Final design configuration and details, including guide rails and supports, are the responsibility of the elevator manufacturer.

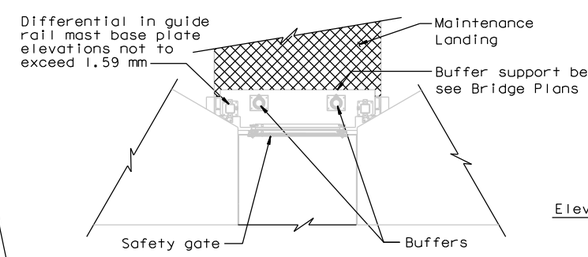

SECTION B-B
(Plan at Buffer Support)
1:50

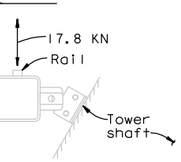

Horizontal Seismic Loads At Guide Rail Mast Tie-Ins

CONTRACT CHANGE ORDER NO. __
SHEET ____ OF ____

MARK	DATE	DESCRIPTIONS	BY	CH'D	CCO
3	11/04/11	TOWER ELEVATOR EXTENSION	JNB	FS	203S2
2	08/26/11	ELEVATOR DETAILS	JNB	FS	85
1	07/17/09	ELEVATOR DETAILS	JNB	FS	85

REVISIONS

REGISTERED PROFESSIONAL ENGINEER JAL BIRDY No. 41547 Exp. 12-31-13 CIVIL STATE OF CALIFORNIA

FOR REVISIONS 1, 2 & 3

ELEVATOR DETAIL NO. 1

ALL DIMENSION ARE IN MILLIMETERS UNLESS OTHERWISE SHOWN

M-33

CALCULATED/ DESIGNED BY	ES	DATE 5/3/02	REVISED BY	JNB	4/21/09
CHECKED BY	RB	5/3/02	DATE REVISED		

DESIGN OVERSIGHT: Bob Zandipour

May 12, 2009

SAS STRUCTURE

STATE OF CALIFORNIA - DEPARTMENT OF TRANSPORTATION

Caltrans

LAST REVISION 00-00-00

DATE PLOTTED => 04 NOV 2011
TIME PLOTTED => 08:33:17

FOR REDUCED PLANS ORIGINAL SCALE IS IN MILLIMETERS 0 20 40 60 80

FILE => I:\bb\04-01200\sas\contract plans and cco\cco\cco*203s2\1-original 11-04-11\dgn\40120fub033.dgn
USERNAME => arivera

CU 04251 EA 0120F1

DIST	COUNTY	ROUTE	KILOMETER POST TOTAL PROJECT	SHEET No	TOTAL SHEETS
04	SF	80	13.2/13.9	70R3	1204

Robert E. Bethel
REGISTERED MECHANICAL ENGINEER

12-6-04
PLANS APPROVAL DATE

REGISTERED PROFESSIONAL ENGINEER ROBERT E. BETHEL No. M018543 Exp. 9/30/06 MECHANICAL STATE OF CALIFORNIA

T.Y. LIN / MOFFATT & NICHOL
825 BATTERY STREET
SAN FRANCISCO, CA 94111

The State of California or its officers or agents shall not be responsible for the accuracy or completeness of electronic copies of this plan sheet.

Caltrans now has a web site! To get to the web site, go to: http://www.dot.ca.gov

Caltrans Metric

CONTRACT CHANGE ORDER NO. __

SHEET ____ OF ____

MARK	DATE	DESCRIPTIONS	BY	CH'D	CCO
3	11/04/11	TOWER ELEVATOR EXTENSION	JNB	FS	203S2
2	08/19/11	ELEVATOR DETAILS	JNB	FS	85
1	07/17/09	ELEVATOR DETAILS	JNB	FS	85

REVISIONS

FOR REVISIONS 1, 2 & 3

PROFESSIONAL ENGINEER REGISTERED JAL BIRDY No. 41547 Exp. 12-31-13 CIVIL STATE OF CALIFORNIA

NOTES:

1. Elevation of tower elevation stops are given at the foot level (tower strut facade top PL, tower diaphragm at elevation 13.000 m).
2. For tower strut facade details, see Bridge Plans.
3. For tower diaphragm at elevation 13.000 m details, see Bridge Plans.
4. When elevator is not in use, it shall be parked at elev 15.000.
5. For elevator safety enclosures, see "Tower Elevator Enclosures" sheets.
6. For Tower Side Elevation, see "Elevator Detail No. 1" sheet.

Legend: Tower elevator stop

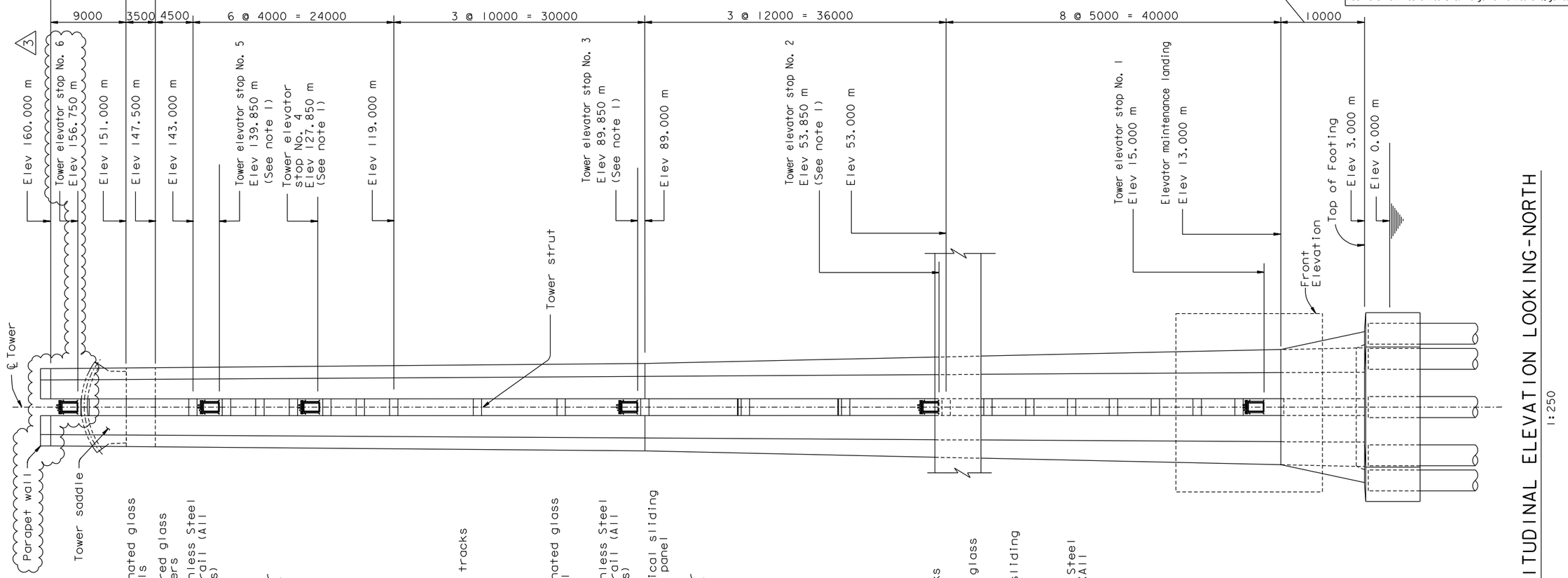

LONGITUDINAL ELEVATION LOOKING-NORTH

1:250

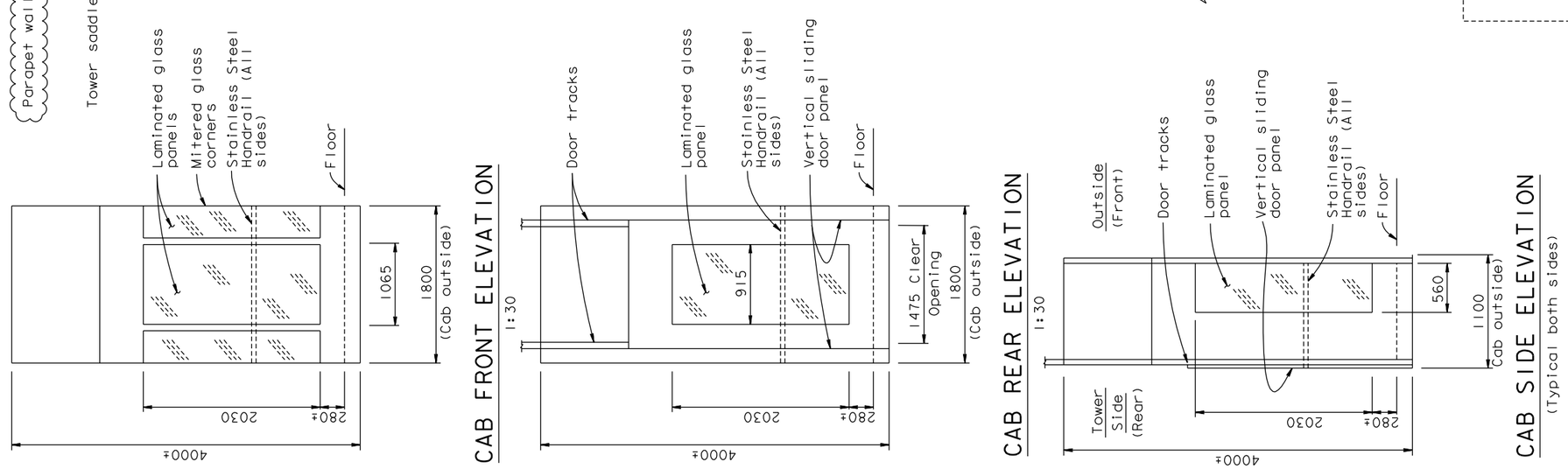

CAB FRONT ELEVATION
1:30

CAB REAR ELEVATION
1:30

CAB SIDE ELEVATION
(Typical both sides)

ELEVATOR DETAIL NO. 2

SCALE: 1:250

ALL DIMENSION ARE IN MILLIMETERS UNLESS OTHERWISE SHOWN

M-34

CALCULATED/ DESIGNED BY	ES	DATE 5/3/02	REVISED BY JNB
CHECKED BY	RB	5/3/02	DATE REVISED 4/21/09

DESIGN OVERSIGHT
Bob Zandipour
May 12, 2009

STATE OF CALIFORNIA - DEPARTMENT OF TRANSPORTATION
Caltrans
SAS STRUCTURE

FOR REDUCED PLANS ORIGINAL SCALE IS IN MILLIMETERS 0 20 40 60 80

FILE => I:\bb\04-012001\sas\contract plans and cco\cco\cco#203s2\1-original 11-04-11\dgn\40120fub034.dgn
USERNAME => arivera

CU 04251 EA 0120F1

LAST REVISION 00-00-00
DATE PLOTTED => 04 NOV 2011
TIME PLOTTED => 10:49:17

DIST.	COUNTY	ROUTE	KILOMETER POST TOTAL PROJECT	SHEET NO.	TOTAL SHEETS
04	SF	80	13.2/13.9	939R4	1204

George Baker
REGISTERED ENGINEER - CIVIL
12-6-04
PLANS APPROVAL DATE

REGISTERED PROFESSIONAL ENGINEER George S. Baker No. C 57112 Exp. 12/31/05 CIVIL STATE OF CALIFORNIA

The State of California or its officers or agents shall not be responsible for the accuracy or completeness of electronic copies of this plan sheet.

T.Y. LIN / MOFFATT & NICHOL
825 BATTERY STREET
SAN FRANCISCO, CA 94111

Caltrans now has a web site! To get to the web site, go to: http://www.dot.ca.gov

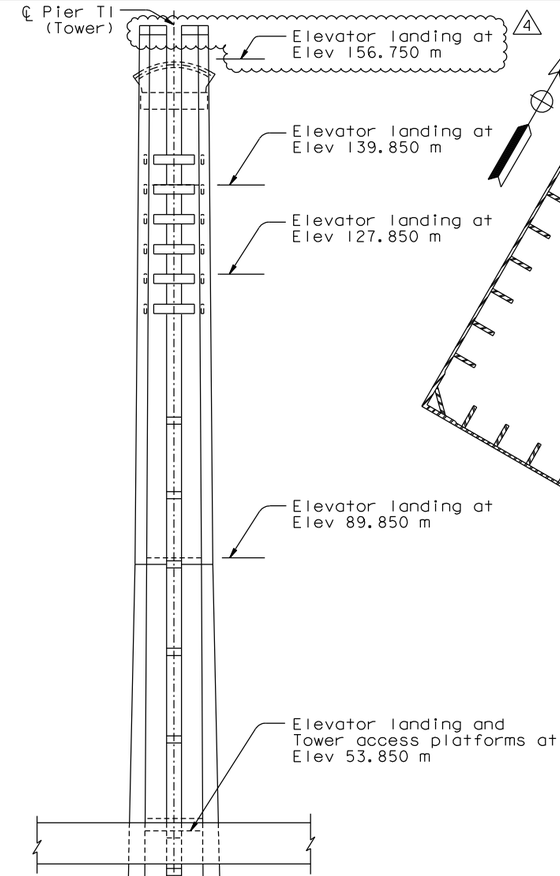

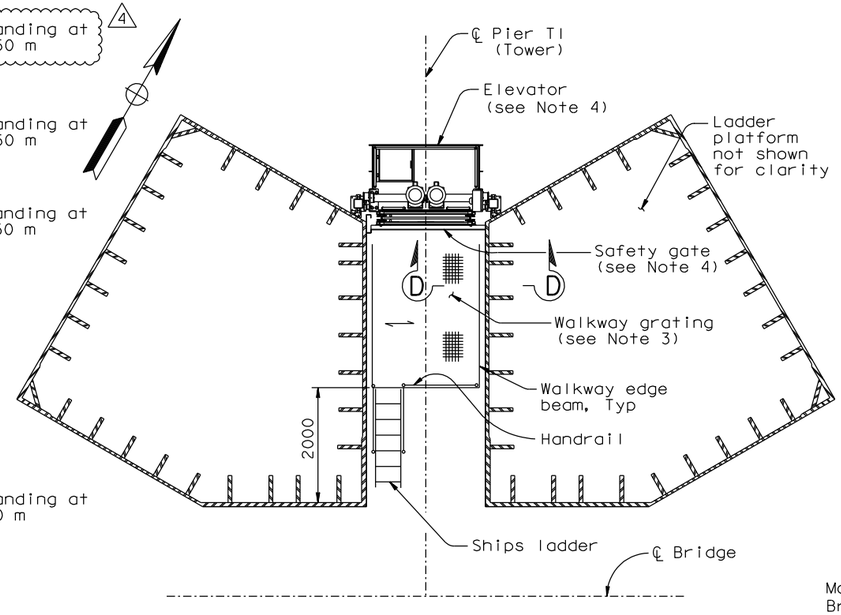

PARTIAL PLAN AT 15.000 M
SECTION A-A
1:50

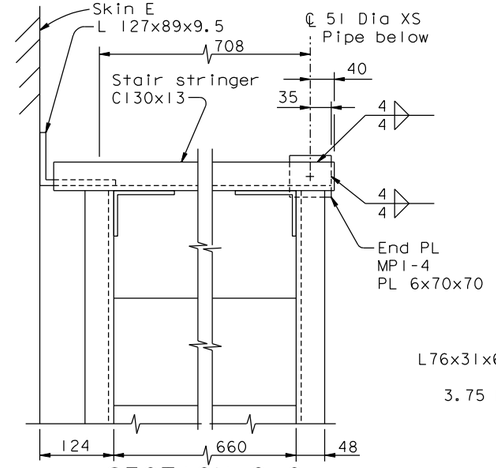

SECTION G-G
1:2.5

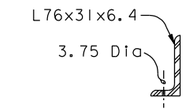

FLOOR CLIPS DETAIL

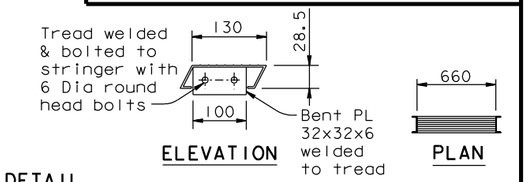

ELEVATION PLAN
TREAD DETAIL (See Note 8)

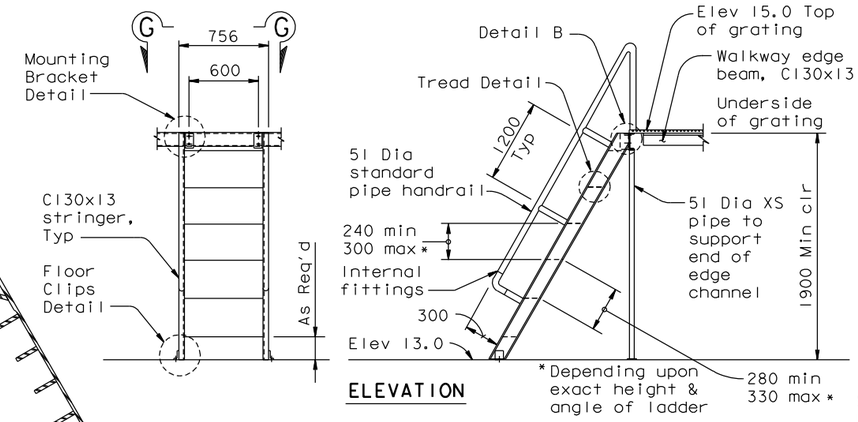

ELEVATION

SHIPS LADDER DETAILS
1:25

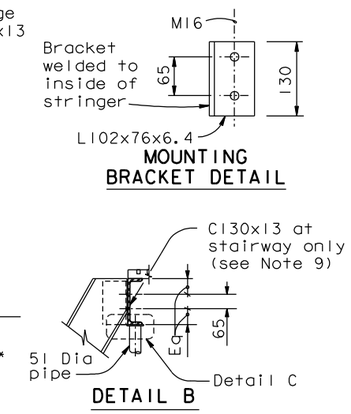

MOUNTING BRACKET DETAIL

DETAIL B

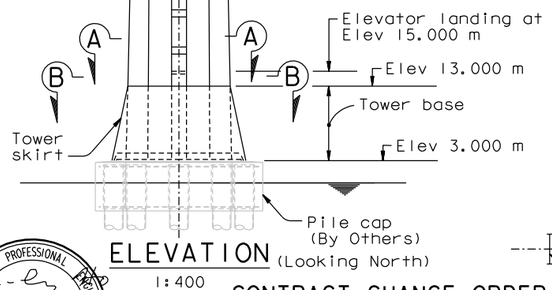

ELEVATION (Looking North)
1:400

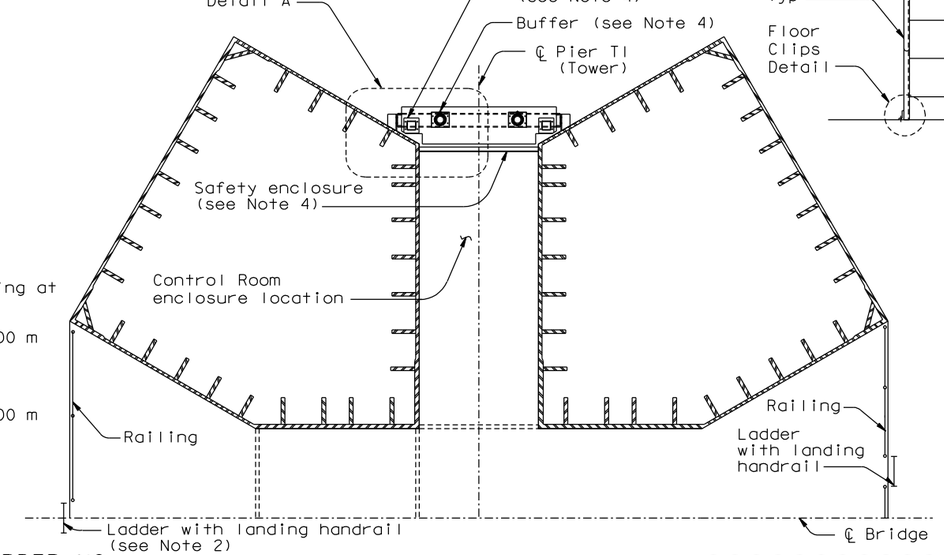

PARTIAL PLAN AT 13.000 M
SECTION B-B
1:50

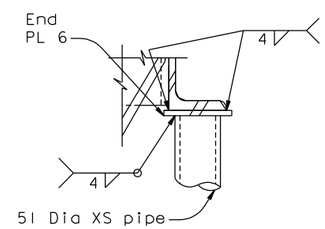

DETAIL C

NOTES:

1. For elevator landing details at elevations 139.850 and 89.850, see "Tower Access Details No.3" sheet.
2. For ladder and landing handrail details, see "Tower Access Details No.7" sheet. For railing details, see Tower Access Details No.8" sheet.
3. Gratings at elevation 15.000 shall have a working load of 7 kN/m (145psf).
4. For elevator and elevator appurtenances, see "Road Plans" sheets.
5. (NOTE DELETED)
6. For elevator landing details at elevation 53.850, see "Tower Access Details No.10" sheet.
7. For Detail A, Section C-C and Section D-D, see "Tower Elevator Support Details No.2" sheet.
8. At the Contractor's option, stair treads may be C130x13. The top outward facing corner of each channel shall be ground to radius of 3 mm. Tread shall be provided with a slip-resistant surface.
9. At the Contractor's option, C130x10.4 may be used for the platform grating support beam at top of stairway only.
10. For elevator landing details at Elevation 156.750, see "Tower Access Details No.31" sheet.

REGISTERED PROFESSIONAL ENGINEER Tien Hung Ho No. C 43990 Exp. 06/30/13 CIVIL STATE OF CALIFORNIA

FOR REVISIONS ONLY

CONTRACT CHANGE ORDER NO. ____
SHEET ___ OF ___

REQUESTS FOR INFORMATION NOT ADDRESSED IN THIS CCO REMAIN IN FORCE

MARK	DATE	DESCRIPTIONS	BY	CH'D	CCO#
4	11/04/11	TOWER ELEVATOR EXTENSION	TH	MN	203S2
3	08/19/11	ELEVATOR DETAILS	TH	MN	85
2	10/15/10	HANDRAIL AND PLATFORMS	TH	MN	114
1	07/17/09	ELEVATOR DETAILS	TH	MN	85

REVISIONS

R. Valizadeh/V. Toan/Y.L./W.L./F.C.
DESIGN OVERSIGHT
Ryan Valizadeh / Vong Toan / Y. Liu
SIGN OFF DATE 11/04/11

	BY	CHECKED
DESIGN	G. Baker	L. Rus
DETAILS	S. Camo	L. Rus
QUANTITIES	D. Turner	J. Leventini

PREPARED FOR THE STATE OF CALIFORNIA DEPARTMENT OF TRANSPORTATION

R. Manzanarez
PROJECT ENGINEER

ALL DIMENSIONS ARE IN MILLIMETERS UNLESS OTHERWISE SHOWN

BRIDGE NO. 34-0006L/R
KILOMETER POST 13.2/13.9

SAN FRANCISCO OAKLAND BAY BRIDGE
EAST SPAN SEISMIC SAFETY PROJECT
SELF-ANCHORED SUSPENSION BRIDGE
(SUPERSTRUCTURE & TOWER)

TOWER ELEVATOR SUPPORT DETAILS NO.1

Rev. Date: 5-18-98

ORIGINAL SCALE IN MILLIMETERS FOR REDUCED PLANS 0 10 20 30 40 50 60 70 80 90 100

CU 04
EA 0120F1

DISREGARD PRINTS BEARING EARLIER REVISION DATES 04/08/02 07/01/02 12/19/02 11/13/05

SHEET 522R4 OF

FILE => I:\bb\04-012001\sas\contract plans and cco\cco\cco#203s2\1-original 11-04-11\dgn\akele01.dgn

USERNAME => crivera DATE PLOTTED => 04 NOV 2011 TIME PLOTTED => 08:36:32

100 % PS&E

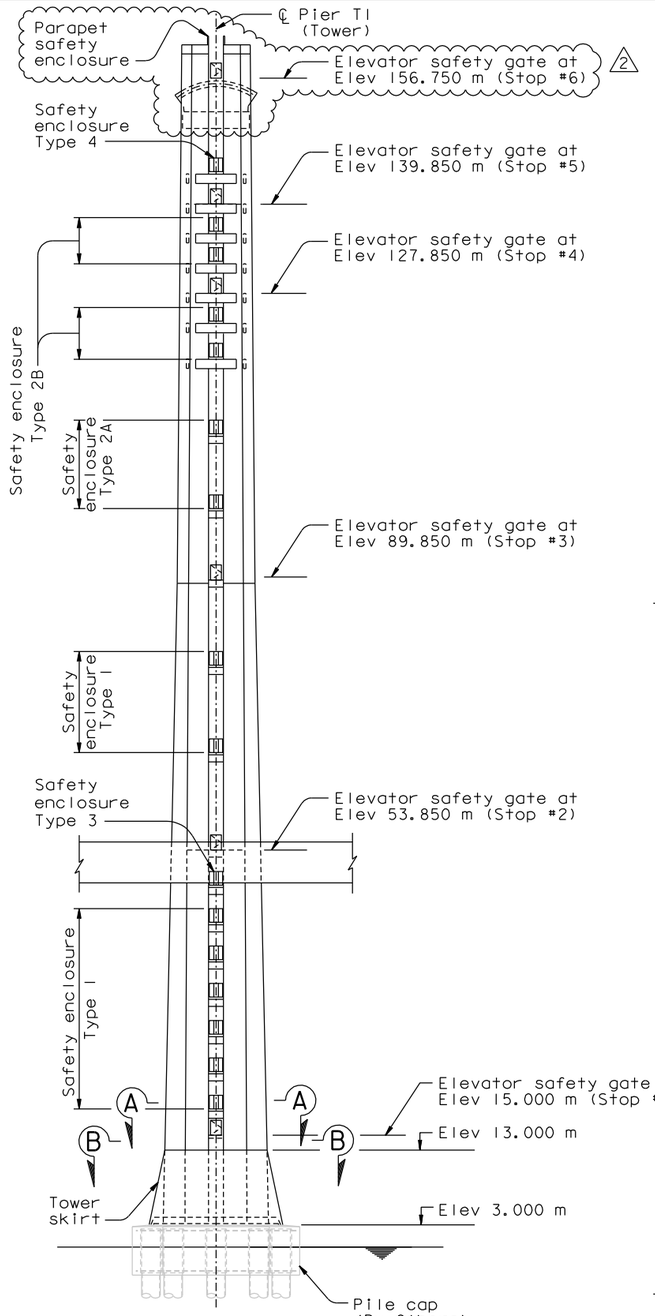

(Looking North)

ELEVATION

1:400

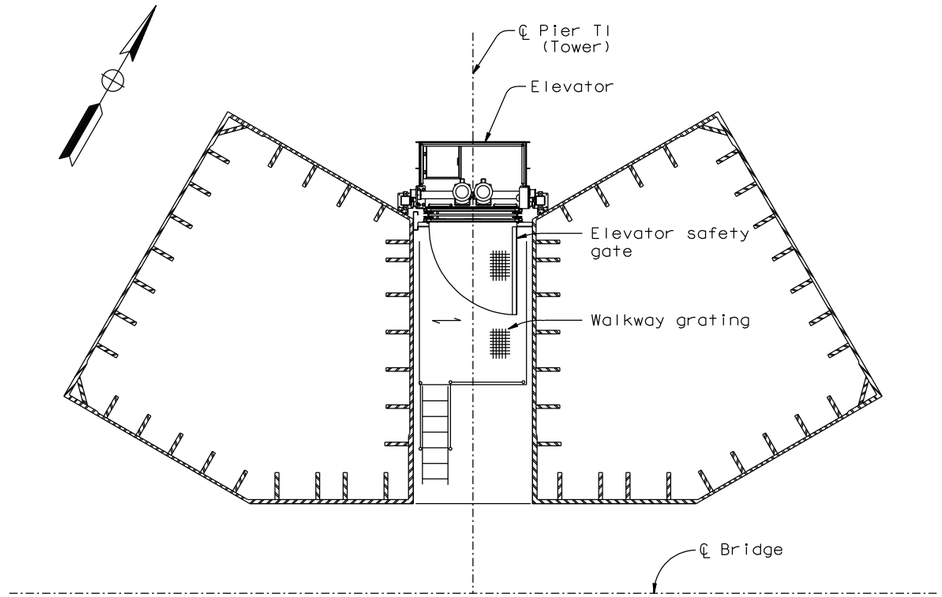

PARTIAL PLAN AT 15.000 M

SECTION A-A

1:50

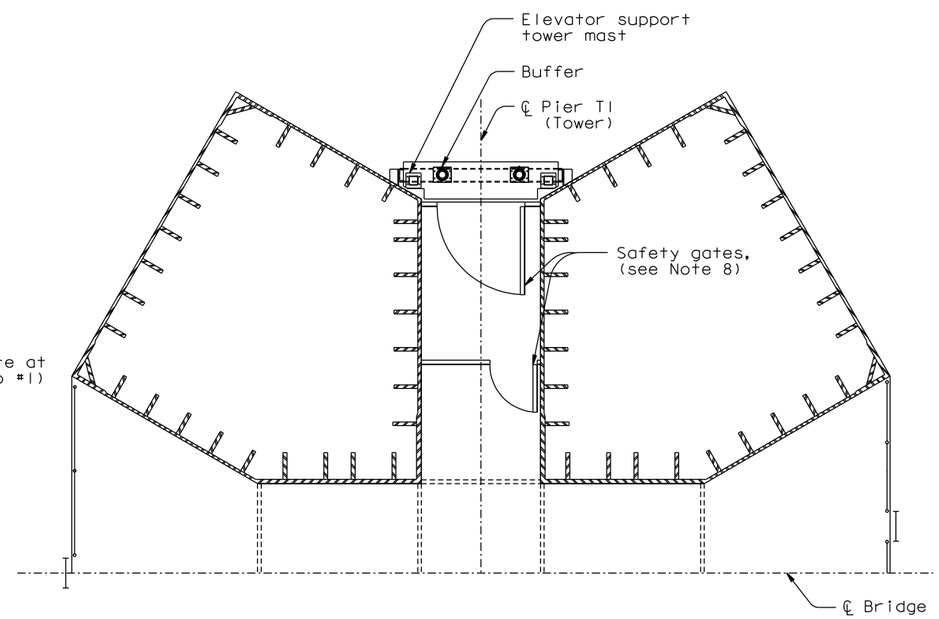

PARTIAL PLAN AT 13.000 M

SECTION B-B

1:50

DIST.	COUNTY	ROUTE	KILOMETER POST TOTAL PROJECT	SHEET NO.	TOTAL SHEETS
04	SF	80	13.2/13.9	940S1R2	1204

Caltrans Metric

REGISTERED ENGINEER - CIVIL

08-26-11

PLANS APPROVAL DATE

REGISTERED PROFESSIONAL ENGINEER Tien Hung Ho No. C 43990 Exp. 06/30/13 CIVIL STATE OF CALIFORNIA

The State of California or its officers or agents shall not be responsible for the accuracy or completeness of electronic copies of this plan sheet.

T.Y. LIN / MOFFATT & NICHOL
825 BATTERY STREET
SAN FRANCISCO, CA 94111

Caltrans now has a web site! To get to the web site, go to: http://www.dot.ca.gov

NOTES:

1. For elevator safety gate details (at Elevator Stops #1, 2, 3, 4, and 5,) see "Tower Elevator Enclosure Details No. 2" sheet. 2
2. For elevator safety enclosure (Types 1, 2A, 2B, 3 and 4) details, see "Tower Elevator Enclosure Details No.3" sheet. 2
3. All C, L, WT sections and plates shall be structural steel A709M Grade 345. All components for elevator safety gates and elevator safety enclosures shall be powder coated black.
4. Welded wire mesh shall be of 4 mm (5/32 inch) Dia galvanized steel wires complete with (1"x1"x16 gauge) U-band frames, powder coated black, by Flynn Enslow or equivalent.
5. Cables shall be 3.2 mm (1/8 inch) diameter 1x19 wire ropes galvanized steel, powder coated black, by Cable Moore or equivalent. Cables shall be tensioned to 350 pound force maximum at both ends with Tuner Turnbuckle tensioners by Cable Moore or equivalent.
6. Gate hinges shall be 120 mm weld-on fixed hinge pin stainless steel #SSWM048FP, powder coated black, by H.A.Guden or equivalent.
7. Cable/wire mesh connections shall be galvanized steel "Separator clamps", powder coated black, by Cable Moore or equivalent.
8. For safety gates at Elev 13.000 m, see "Road Plans".
9. The Contractor shall field verify the clear distance between tower shafts at all gates and enclosures elevations prior to fabrication.
10. For elevator safety gate details at Elevator Stop #6, see "Tower Elevator Enclosure Details No.5" sheet. 2
11. For parapet safety enclosure details, see "Tower Elevator Enclosure Details No.6" sheet.

CONTRACT CHANGE ORDER NO. ____
SHEET ___ OF ___

REQUESTS FOR INFORMATION NOT ADDRESSED IN THIS CCO REMAIN IN FORCE

MARK	DATE	DESCRIPTIONS	BY	CH'D	CCO#
2	11/04/11	TOWER ELEVATOR EXTENSION	AB	TH	203S2
1	11/02/11	ELEVATOR DETAILS	GM	TH	85
0	08/26/11	ELEVATOR DETAILS	GM	TH	85

REVISIONS

R. Valizadeh/V. Toan/Y.L./W.L./F.C.
DESIGN OVERSIGHT
SIGN OFF DATE 11/04/11

	BY	CHECKED
DESIGN	G. Mok	T. Ho
DETAILS	G. Mok	T. Ho
QUANTITIES	G. Mok	T. Ho

PREPARED FOR THE STATE OF CALIFORNIA DEPARTMENT OF TRANSPORTATION

ALL DIMENSIONS ARE IN MILLIMETERS UNLESS OTHERWISE SHOWN

R. Manzanarez
PROJECT ENGINEER

BRIDGE NO. 34-0006L/R
KILOMETER POST 13.2/13.9

SAN FRANCISCO OAKLAND BAY BRIDGE
EAST SPAN SEISMIC SAFETY PROJECT
SELF-ANCHORED SUSPENSION BRIDGE
(SUPERSTRUCTURE & TOWER)

TOWER ELEVATOR ENCLOSURE DETAILS NO. 1

Rev. Date: 5-18-98

ORIGINAL SCALE IN MILLIMETERS FOR REDUCED PLANS 0 10 20 30 40 50 60 70 80 90 100

CU 04
EA 0120F1

DISREGARD PRINTS BEARING EARLIER REVISION DATES 08/26/11

REVISION DATES (PRELIMINARY STAGE ONLY)

SHEET 523S1R2 OF

FILE => I:\bb\04-012001\sas\contract plans and cco\cco\cco#203s2\1-original 11-04-11\dgn\akele03.dgn

100 % PS&E

USERNAME => oriverg DATE PLOTTED => 04 NOV 2011 TIME PLOTTED => 08:37:06

DIST.	COUNTY	ROUTE	KILOMETER POST TOTAL PROJECT	SHEET NO.	TOTAL SHEETS
04	SF	80	13.2/13.9	940S4B	1204

REGISTERED ENGINEER - CIVIL

11-04-11
PLANS APPROVAL DATE

REGISTERED PROFESSIONAL ENGINEER Marwan N. Nader No. C 054426 Exp. 12/31/11 CIVIL STATE OF CALIFORNIA

The State of California or its officers or agents shall not be responsible for the accuracy or completeness of electronic copies of this plan sheet.

T.Y. LIN / MOFFATT & NICHOL
825 BATTERY STREET
SAN FRANCISCO, CA 94111

Caltrans now has a web site! To get to the web site, go to: http://www.dot.ca.gov

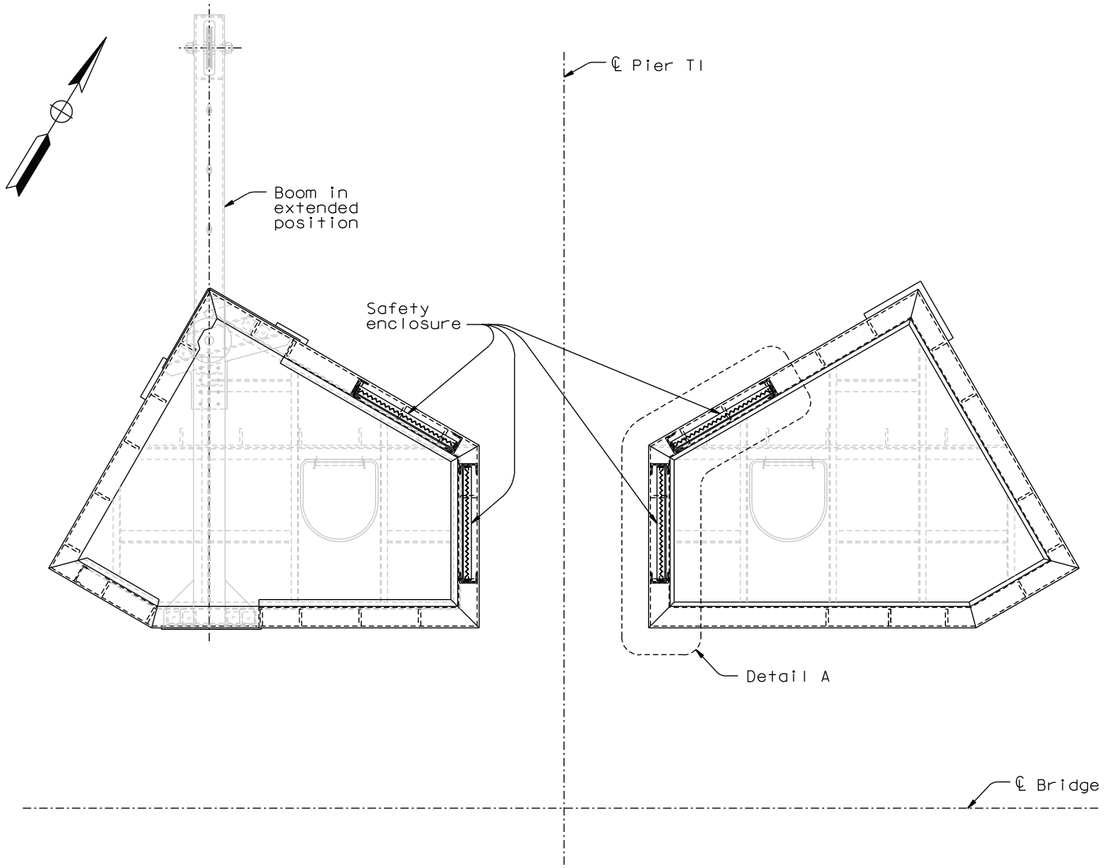

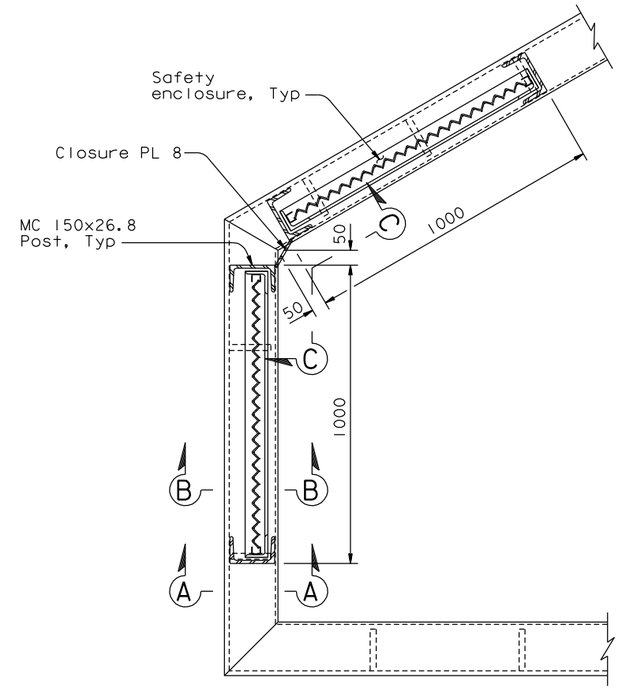

DETAIL A
1:10

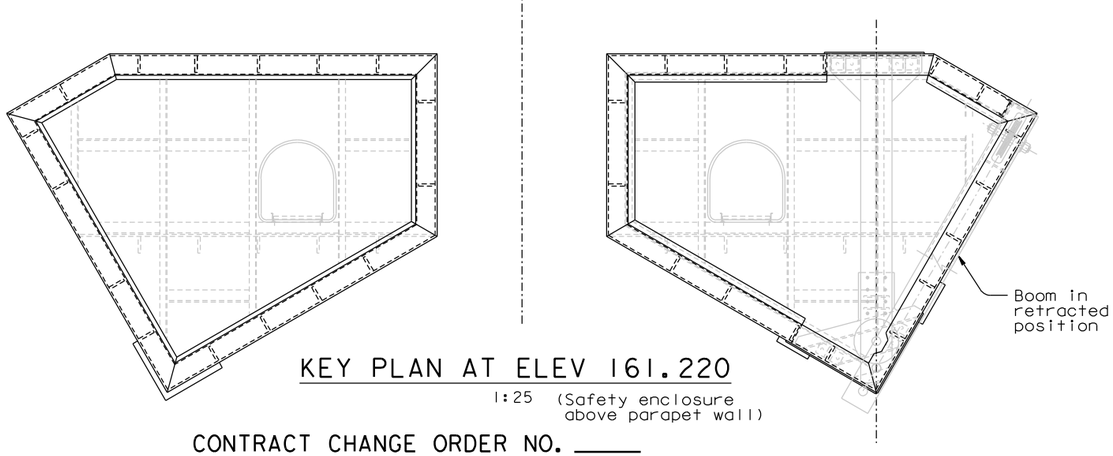

KEY PLAN AT ELEV 161.220
1:25 (Safety enclosure above parapet wall)

NOTES:

1. For Sections A-A, B-B and View C-C, see "Tower Elevator Enclosure Details No.7" sheet.

CONTRACT CHANGE ORDER NO. _____
SHEET ____ OF ____

REQUESTS FOR INFORMATION NOT ADDRESSED IN THIS CCO REMAIN IN FORCE

ALL DIMENSIONS ARE IN MILLIMETERS UNLESS OTHERWISE SHOWN

R. Valizadeh/V. Toan/Y.L./W.L./F.C.
DESIGN OVERSIGHT
SIGN OFF DATE 11/04/11

MARK	DATE	DESCRIPTIONS	BY	CH'D	CCO#
0	11/04/11	TOWER ELEVATOR SAFETY ENCLOSURE	NV	MN	203S2

REVISIONS

	BY	CHECKED
DESIGN	N. Vo	M. Nader
DETAILS	N. Vo	A. Baumberger
QUANTITIES	N. Vo	J. Duxbury

PREPARED FOR THE STATE OF CALIFORNIA DEPARTMENT OF TRANSPORTATION

R. Manzanarez
PROJECT ENGINEER

BRIDGE NO. 34-0006L/R
KILOMETER POST 13.2/13.9

SAN FRANCISCO OAKLAND BAY BRIDGE
EAST SPAN SEISMIC SAFETY PROJECT
SELF-ANCHORED SUSPENSION BRIDGE
(SUPERSTRUCTURE & TOWER)

TOWER ELEVATOR ENCLOSURE DETAILS NO.6

Rev. Date: 5-18-98

ORIGINAL SCALE IN MILLIMETERS FOR REDUCED PLANS 0 10 20 30 40 50 60 70 80 90 100

CU 04
EA 0120F1

DISREGARD PRINTS BEARING EARLIER REVISION DATES 11/04/11

REVISION DATES (PRELIMINARY STAGE ONLY)

SHEET 523S4B OF

FILE => I:\bb\04-012001\sas\contract plans and cco\cco\cco#203s2\1-original 11-04-11\dgn\akelel2.dgn

100 % PS&E

USERNAME => orlivera DATE PLOTTED => 04 NOV 2011 TIME PLOTTED => 08:38:20

DIST.	COUNTY	ROUTE	KILOMETER POST TOTAL PROJECT	SHEET NO.	TOTAL SHEETS
04	SF	80	13.2/13.9	940S4C	1204

REGISTERED ENGINEER - CIVIL

11-04-11
PLANS APPROVAL DATE

The State of California or its officers or agents shall not be responsible for the accuracy or completeness of electronic copies of this plan sheet.

REGISTERED PROFESSIONAL ENGINEER Marwan N. Nader No. C 054426 Exp. 12/31/11 CIVIL STATE OF CALIFORNIA

T.Y. LIN / MOFFATT & NICHOL
825 BATTERY STREET
SAN FRANCISCO, CA 94111

Caltrans now has a web site! To get to the web site, go to: http://www.dot.ca.gov

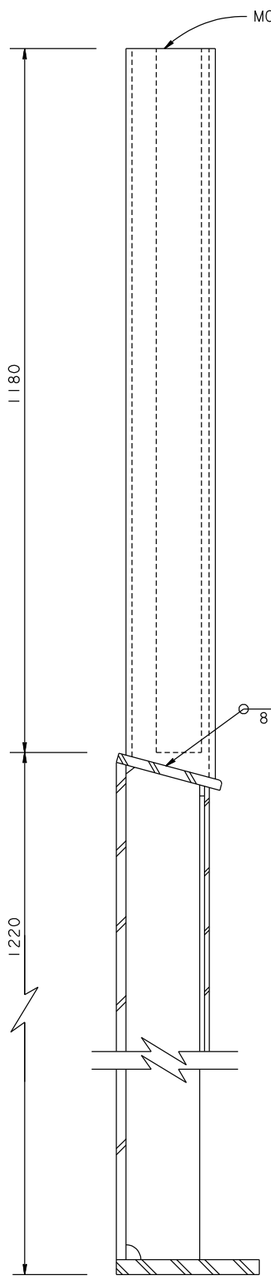

SECTION A-A
1:5

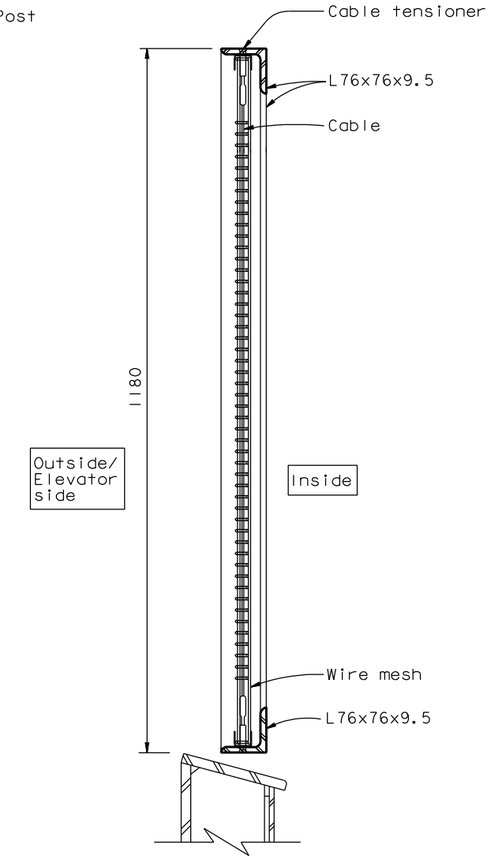

SECTION B-B (See Note 1)
1:5

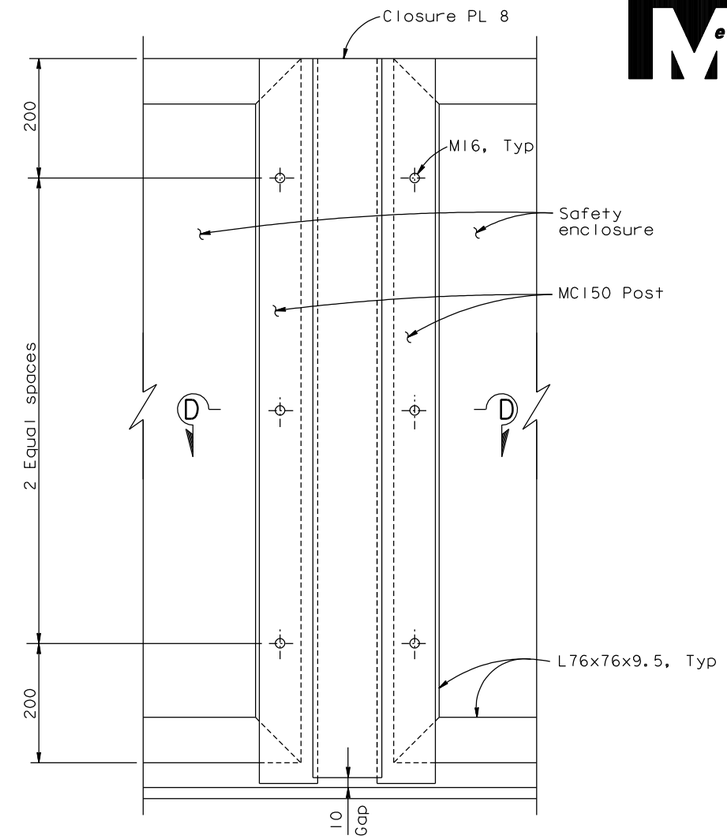

VIEW C-C (Developed)
1:5

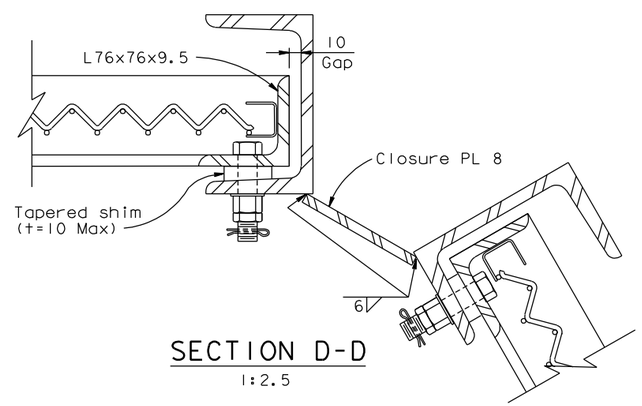

SECTION D-D
1:2.5

NOTES:

1. For enclosure details not shown, see "Tower Elevator Enclosure Details No.2" sheet.

CONTRACT CHANGE ORDER NO. ____
SHEET ____ OF ____

REQUESTS FOR INFORMATION NOT ADDRESSED IN THIS CCO REMAIN IN FORCE

ALL DIMENSIONS ARE IN MILLIMETERS UNLESS OTHERWISE SHOWN

R. Valizadeh/V. Toan/Y.L./W.L./F.C.
DESIGN OVERSIGHT
Roya Valizadeh / Vong Toan / Y. Liu
SIGN OFF DATE 11/04/11

MARK	DATE	DESCRIPTIONS	BY	CH'D	CCO#
0	11/04/11	TOWER ELEVATOR EXTENSION	NV	MN	203S2

REVISIONS

	BY	CHECKED
DESIGN	N. Vo	M. Nader
DETAILS	N. Vo	A. Baumberger
QUANTITIES	N. Vo	J. Duxbury

PREPARED FOR THE STATE OF CALIFORNIA DEPARTMENT OF TRANSPORTATION

R. Manzanarez
PROJECT ENGINEER

BRIDGE NO. 34-0006L/R
KILOMETER POST 13.2/13.9

SAN FRANCISCO OAKLAND BAY BRIDGE
EAST SPAN SEISMIC SAFETY PROJECT
SELF-ANCHORED SUSPENSION BRIDGE
(SUPERSTRUCTURE & TOWER)

TOWER ELEVATOR ENCLOSURE DETAILS NO. 7

Rev. Date: 5-18-98

ORIGINAL SCALE IN MILLIMETERS FOR REDUCED PLANS 0 10 20 30 40 50 60 70 80 90 100

CU 04
EA 0120F1

DISREGARD PRINTS BEARING EARLIER REVISION DATES 11/04/11

REVISION DATES (PRELIMINARY STAGE ONLY)

SHEET 523S4C OF

FILE => I:\bb\04-012001\sas\contract plans and cco\cco\cco#203s2\1-original 11-04-11\dgn\akele13.dgn

100 % PS&E

USERNAME => orivera DATE PLOTTED => 04 NOV 2011 TIME PLOTTED => 08:38:51

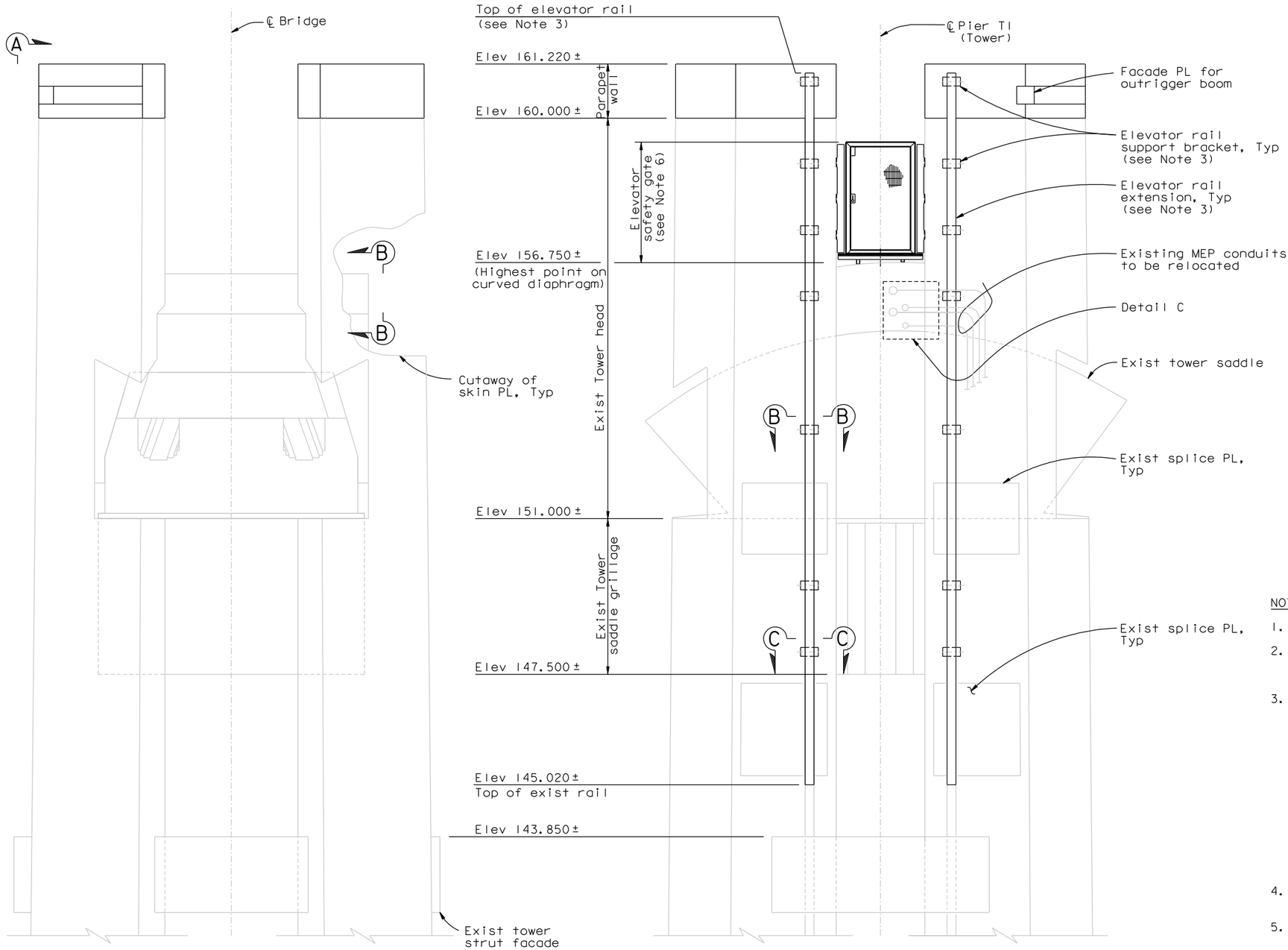

A ELEVATION LOOKING EAST
1:50

VIEW A-A
1:50

TOWER TOP

CONTRACT CHANGE ORDER NO. ____
SHEET ___ OF ___

REQUESTS FOR INFORMATION NOT ADDRESSED IN THIS CCO REMAIN IN FORCE

NOTES:

1. All steel shall be ASTM A709M Grade 345 UNO.
2. High strength bolts shall be ASTM A325M. At the Contractor's option, equivalent imperial A325 may be used.
3. The following shall be determined by the elevator manufacturer and submitted for review and approval of the Engineer:
   - Details and locations of elevator rail support brackets and connection to supporting structure. Spacing of support brackets shall not exceed 3048 mm.
   - Top of elevator rail elevation and stopper details. Top of elevator rail shall not extend above top of parapet wall. (1)
   - Details of elevator rail (mast and rack) and connections to support brackets.
4. For Sections B-B and C-C, see "Tower Elevator Extension Details No. 3" sheet.
5. For Detail C, see "Tower Elevator Extension Detail No. 4" sheet.
6. For safety gate details, see "Tower Elevator Enclosure Details" sheets.
7. For View B-B, see "Tower Elevator Extension Details No. 4" sheet.

DIST.	COUNTY	ROUTE	KILOMETER POST TOTAL PROJECT	SHEET NO.	TOTAL SHEETS
04	SF	80	13.2/13.9	940S6R1	1204

REGISTERED ENGINEER - CIVIL
09-16-11
PLANS APPROVAL DATE

REGISTERED PROFESSIONAL ENGINEER Marwan N. Nader No. C 054426 Exp. 12/31/11 CIVIL STATE OF CALIFORNIA

The State of California or its officers or agents shall not be responsible for the accuracy or completeness of electronic copies of this plan sheet.

T.Y. LIN / MOFFATT & NICHOL
825 BATTERY STREET
SAN FRANCISCO, CA 94111

Caltrans now has a web site! To get to the web site, go to: http://www.dot.ca.gov

Caltrans Metric

R. Valizadeh/V. Toan/Y.L./W.L./F.C.
DESIGN OVERSIGHT
SIGN OFF DATE 11/11/11

MARK	DATE	DESCRIPTIONS	BY	CH'D	CCO#
1	11/11/11	TOWER ELEVATOR EXTENSION	NV	MN	203S2
0	09/16/11	TOWER SUSPENDER CABLE & ELEVATOR	NV	MN	203S1

REVISIONS

	BY	CHECKED
DESIGN	N. Vo	M. Nader
DETAILS	N. Vo	M. Nader
QUANTITIES	N. Vo	M. Nader

PREPARED FOR THE STATE OF CALIFORNIA DEPARTMENT OF TRANSPORTATION

R. Manzanarez
PROJECT ENGINEER

ALL DIMENSIONS ARE IN MILLIMETERS UNLESS OTHERWISE SHOWN

BRIDGE NO. 34-0006L/R
KILOMETER POST 13.2/13.9

SAN FRANCISCO OAKLAND BAY BRIDGE
EAST SPAN SEISMIC SAFETY PROJECT
SELF-ANCHORED SUSPENSION BRIDGE
(SUPERSTRUCTURE & TOWER)

TOWER ELEVATOR EXTENSION DETAILS NO. 2

Rev. Date: 5-18-98

ORIGINAL SCALE IN MILLIMETERS FOR REDUCED PLANS 0 10 20 30 40 50 60 70 80 90 100

CU 04
EA 0120F1

DISREGARD PRINTS BEARING EARLIER REVISION DATES 09/16/11

REVISION DATES (PRELIMINARY STAGE ONLY)

SHEET 523S6R1 OF

FILE => $REQUEST

100% PS&E

DATE PLOTTED => $DATE TIME PLOTTED => $TIME USERNAME => $USER