DIST.	COUNTY	ROUTE	KILOMETER POST TOTAL PROJECT	SHEET NO.	TOTAL SHEETS
04	SF	80	13.2/13.9	940S4C	1204

REGISTERED ENGINEER - CIVIL

11-04-11
PLANS APPROVAL DATE

The State of California or its officers or agents shall not be responsible for the accuracy or completeness of electronic copies of this plan sheet.

REGISTERED PROFESSIONAL ENGINEER Marwan N. Nader No. C 054426 Exp. 12/31/11 CIVIL STATE OF CALIFORNIA

T.Y. LIN / MOFFATT & NICHOL
825 BATTERY STREET
SAN FRANCISCO, CA 94111

Caltrans now has a web site! To get to the web site, go to: http://www.dot.ca.gov

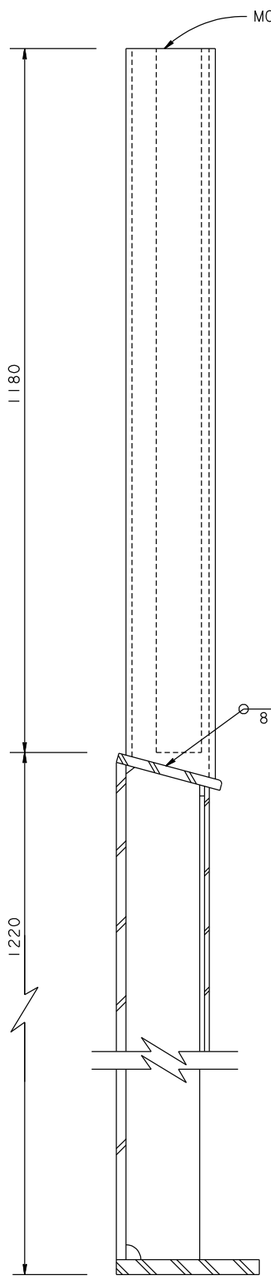

SECTION A-A
1:5

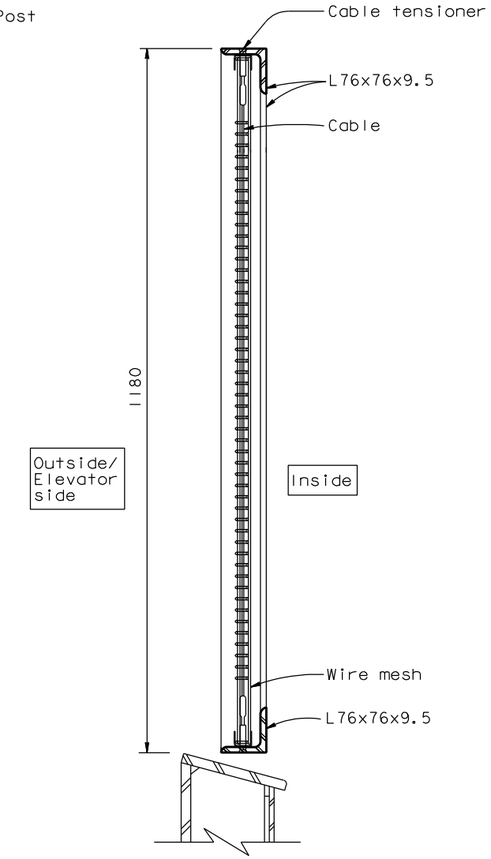

SECTION B-B (See Note 1)
1:5

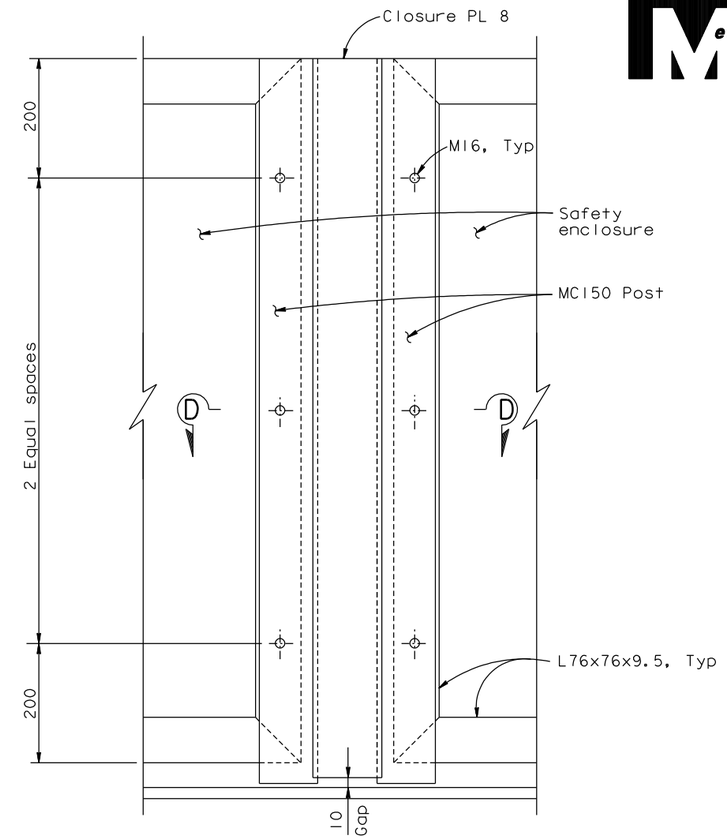

VIEW C-C (Developed)
1:5

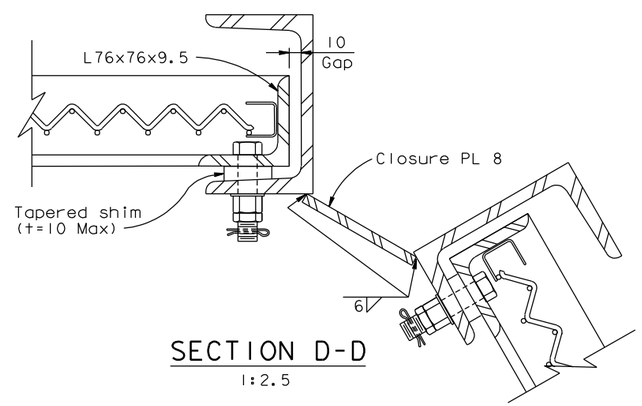

SECTION D-D
1:2.5

NOTES:

1. For enclosure details not shown, see "Tower Elevator Enclosure Details No.2" sheet.

CONTRACT CHANGE ORDER NO. ____
SHEET ____ OF ____

REQUESTS FOR INFORMATION NOT ADDRESSED IN THIS CCO REMAIN IN FORCE

ALL DIMENSIONS ARE IN MILLIMETERS UNLESS OTHERWISE SHOWN

R. Valizadeh/V. Toan/Y.L./W.L./F.C.
DESIGN OVERSIGHT
Roya Valizadeh / Vong Toan / Y. Liu
SIGN OFF DATE 11/04/11

MARK	DATE	DESCRIPTIONS	BY	CH'D	CCO#
0	11/04/11	TOWER ELEVATOR EXTENSION	NV	MN	203S2

REVISIONS

	BY	CHECKED
DESIGN	N. Vo	M. Nader
DETAILS	N. Vo	A. Baumberger
QUANTITIES	N. Vo	J. Duxbury

PREPARED FOR THE STATE OF CALIFORNIA DEPARTMENT OF TRANSPORTATION

R. Manzanarez
PROJECT ENGINEER

BRIDGE NO. 34-0006L/R
KILOMETER POST 13.2/13.9

SAN FRANCISCO OAKLAND BAY BRIDGE
EAST SPAN SEISMIC SAFETY PROJECT
SELF-ANCHORED SUSPENSION BRIDGE
(SUPERSTRUCTURE & TOWER)

TOWER ELEVATOR ENCLOSURE DETAILS NO. 7

Rev. Date: 5-18-98

ORIGINAL SCALE IN MILLIMETERS FOR REDUCED PLANS 0 10 20 30 40 50 60 70 80 90 100

CU 04
EA 0120F1

DISREGARD PRINTS BEARING EARLIER REVISION DATES 11/04/11

REVISION DATES (PRELIMINARY STAGE ONLY)

SHEET 523S4C OF

FILE => I:\bb\04-012001\sas\contract plans and cco\cco\cco#203s2\1-original 11-04-11\dgn\akele13.dgn

100 % PS&E

USERNAME => orivera DATE PLOTTED => 04 NOV 2011 TIME PLOTTED => 08:38:51