DIST.	COUNTY	ROUTE	KILOMETER POST TOTAL PROJECT	SHEET NO.	TOTAL SHEETS
04	SF	80	13.2/13.9	940S4CR1	1204

REGISTERED ENGINEER - CIVIL

11-04-11
PLANS APPROVAL DATE

REGISTERED PROFESSIONAL ENGINEER Marwan N. Nader No. C 054426 Exp. 12/31/13 CIVIL STATE OF CALIFORNIA

The State of California or its officers or agents shall not be responsible for the accuracy or completeness of electronic copies of this plan sheet.

T.Y. LIN / MOFFATT & NICHOL
825 BATTERY STREET
SAN FRANCISCO, CA 94111

Caltrans now has a web site! To get to the web site, go to: http://www.dot.ca.gov

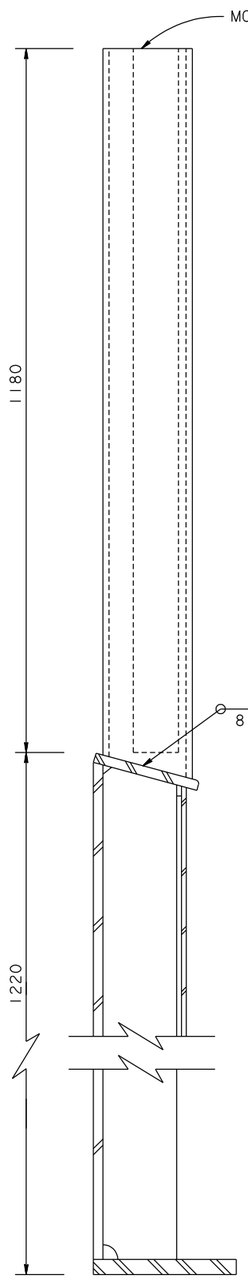

SECTION A-A
1:5

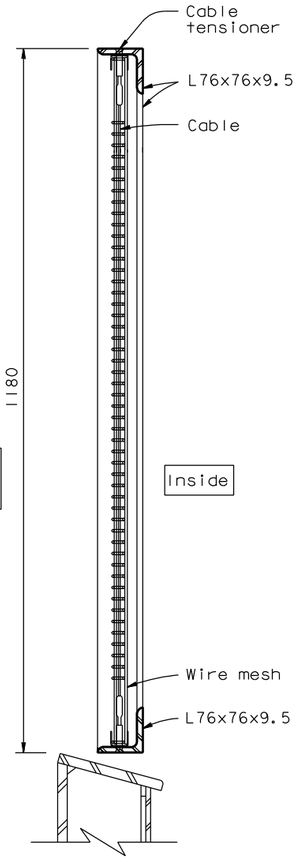

SECTION B-B (See Note 1)
1:5

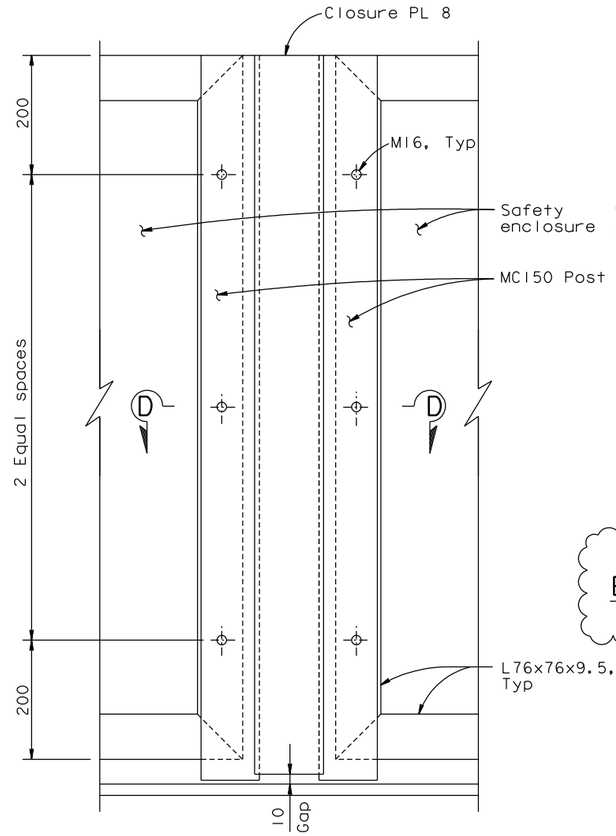

VIEW C-C (Developed)
1:5

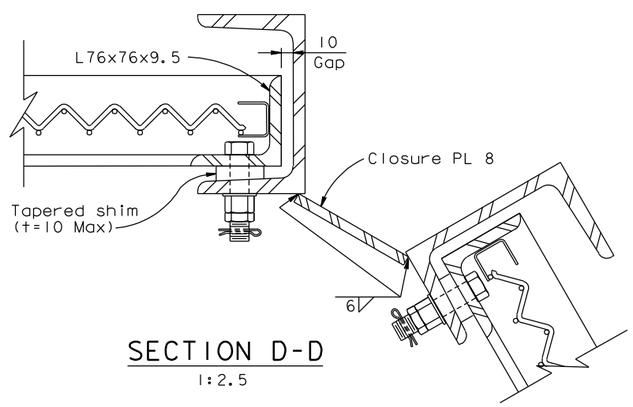

SECTION D-D
1:2.5

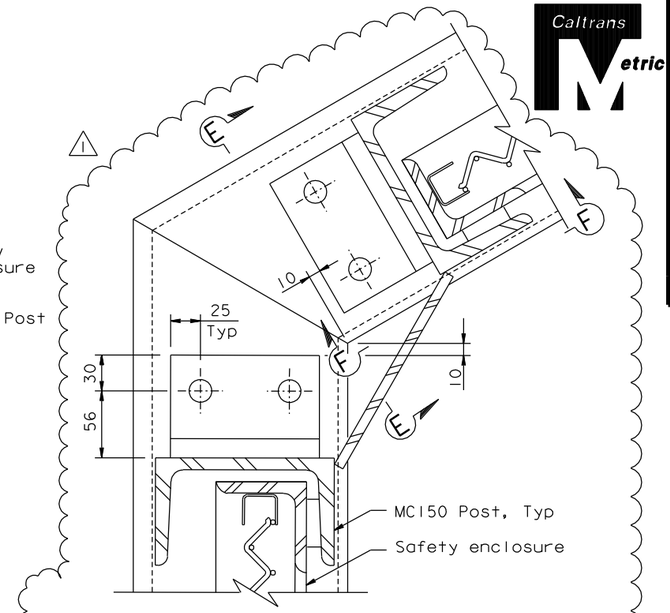

ENCLOSURE SCREEN BOLTED
ALTERNATE DETAIL
1:2.5

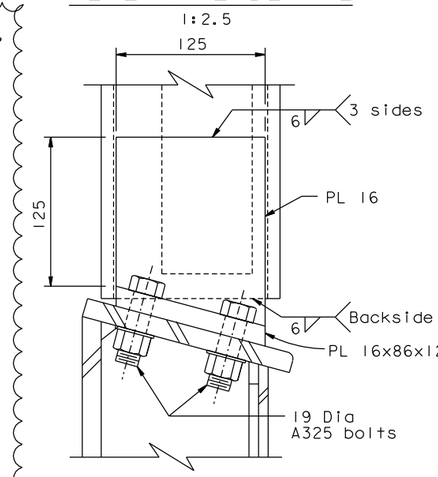

SECTION E-E
1:2.5

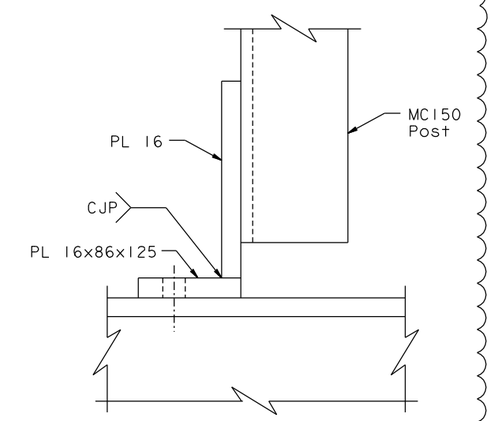

SECTION F-F
1:2.5

NOTES:

1. For enclosure details not shown, see "Tower Elevator Enclosure Details No.2" sheet.
2. At the Contractor's option, Enclosure Screen Bolted Alternate Detail may be used in lieu of fillet weld.

CONTRACT CHANGE ORDER NO. _____
SHEET ___ OF ___

REQUESTS FOR INFORMATION NOT ADDRESSED IN THIS CCO REMAIN IN FORCE

ALL DIMENSIONS ARE IN MILLIMETERS UNLESS OTHERWISE SHOWN

R. Valizadeh/V. Toan/Y.L./W.L./F.C.
DESIGN OVERSIGHT
Reza Valizadeh / Vong Toan / Y. Liu
SIGN OFF DATE 05/18/12

MARK	DATE	DESCRIPTIONS	BY	CH'D	CCO#
1	05/16/12	TOWER ELEVATOR EXTENSION	NV	MN	203S2
0	11/04/11	TOWER ELEVATOR EXTENSION	NV	MN	203S2

REVISIONS

DESIGN	BY N. Vo	CHECKED M. Nader	
DETAILS	BY N. Vo	CHECKED A. Baumberger	
QUANTITIES	BY N. Vo	CHECKED J. Duxbury	

PREPARED FOR THE STATE OF CALIFORNIA DEPARTMENT OF TRANSPORTATION

R. Manzanarez
PROJECT ENGINEER

BRIDGE NO. 34-0006L/R
KILOMETER POST 13.2/13.9

SAN FRANCISCO OAKLAND BAY BRIDGE
EAST SPAN SEISMIC SAFETY PROJECT
SELF-ANCHORED SUSPENSION BRIDGE
(SUPERSTRUCTURE & TOWER)

TOWER ELEVATOR ENCLOSURE DETAILS NO. 7

Rev. Date: 5-18-98

ORIGINAL SCALE IN MILLIMETERS FOR REDUCED PLANS 0 10 20 30 40 50 60 70 80 90 100

CU 04
EA 0120F1

DISREGARD PRINTS BEARING EARLIER REVISION DATES

REVISION DATES (PRELIMINARY STAGE ONLY) 11/04/11

SHEET 523S4CR1 OF

FILE => I:\bb\04-012001\sas\contract plans and cco\cco\cco*203s2\3-revision 05-16-12\dgn\akelel3.dgn

100% PS&E

USERNAME => arivera DATE PLOTTED => 16 MAY 2012 TIME PLOTTED => 09:31:25