DIST.	COUNTY	ROUTE	KILOMETER POST TOTAL PROJECT	SHEET NO.	TOTAL SHEETS
04	SF	80	13.2/13.9	940S1R3	1204

Caltrans Metric

REGISTERED ENGINEER - CIVIL

08-26-11
PLANS APPROVAL DATE

REGISTERED PROFESSIONAL ENGINEER Tien Hung Ho No. C 43990 Exp. 06/30/13 CIVIL STATE OF CALIFORNIA

The State of California or its officers or agents shall not be responsible for the accuracy or completeness of electronic copies of this plan sheet.

T.Y. LIN / MOFFATT & NICHOL
825 BATTERY STREET
SAN FRANCISCO, CA 94111

Caltrans now has a web site! To get to the web site, go to: http://www.dot.ca.gov

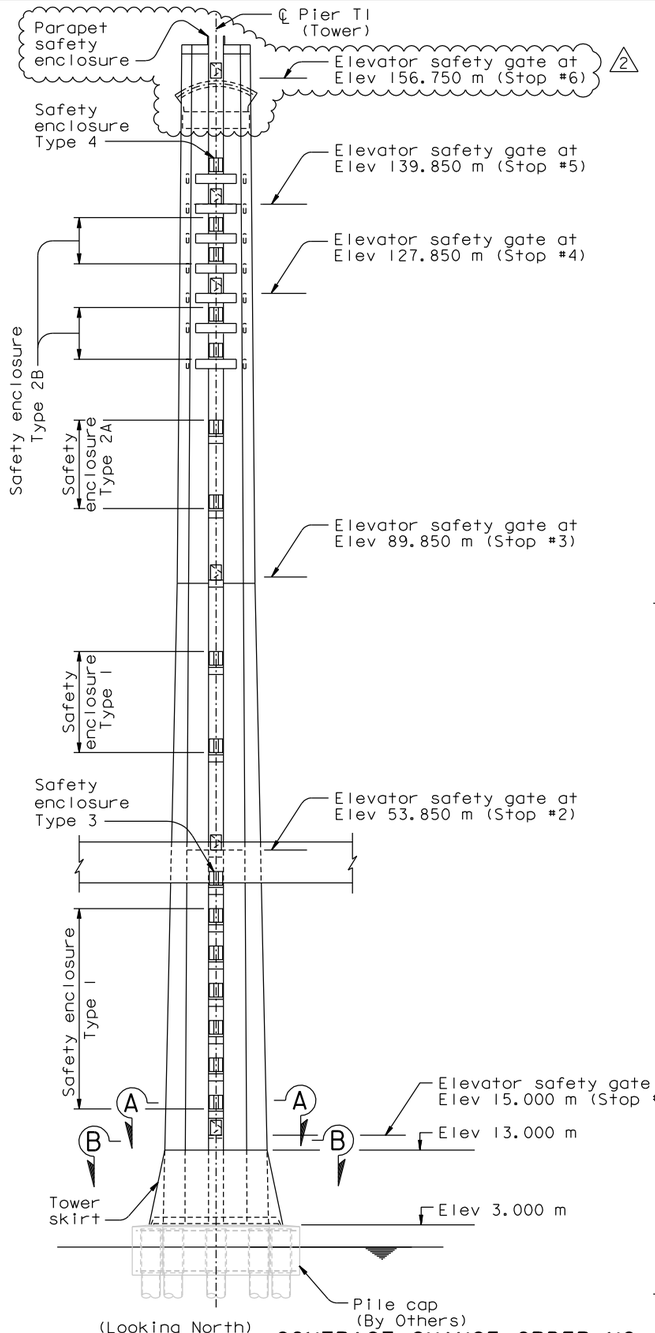

(Looking North)
ELEVATION
1:400

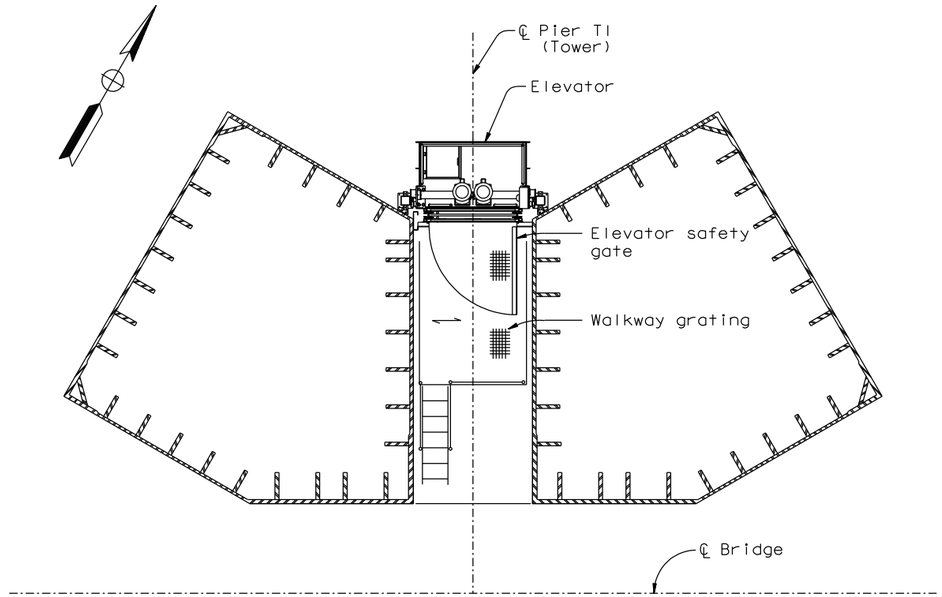

PARTIAL PLAN AT 15.000 M
SECTION A-A
1:50

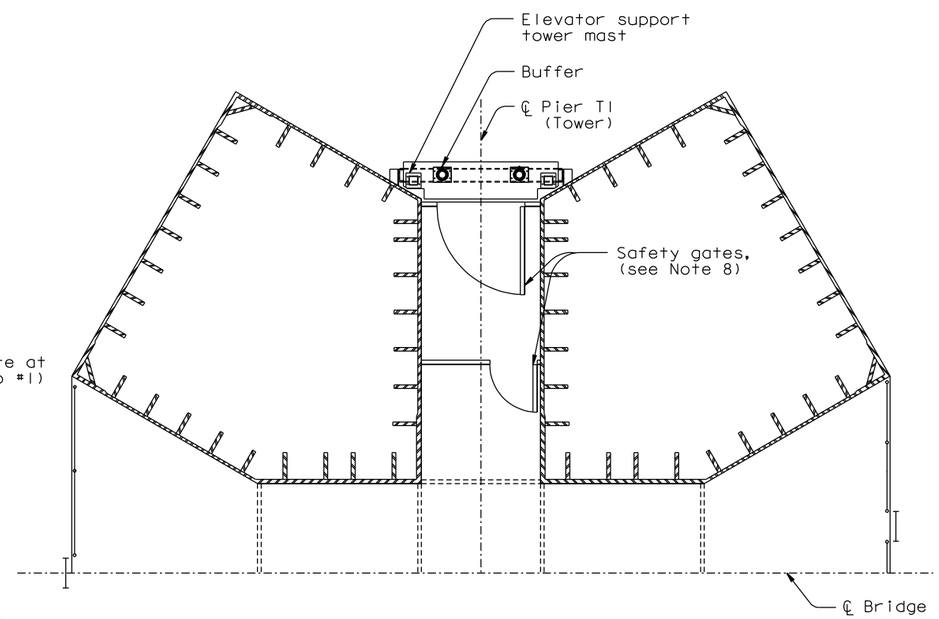

PARTIAL PLAN AT 13.000 M
SECTION B-B
1:50

NOTES:

1. For elevator safety gate details (at Elevator Stops #1, 2, 3, 4, and 5,) see "Tower Elevator Enclosure Details No. 2" sheet. 2 2
2. For elevator safety enclosure (Types 1, 2A, 2B, 3 and 4) details, see "Tower Elevator Enclosure Details No.3" sheet. 2 2
3. All C, L, WT sections and plates shall be (galvanized) structural steel A709M Grade 345. All components for elevator safety gates and elevator safety enclosures shall be powder coated black. 3
4. Welded wire mesh shall be of 4 mm (5/32 inch) Dia galvanized steel wires complete with (1"x1"x16 gauge) U-band frames, powder coated black, by Flynn Enslow or equivalent.
5. Cables shall be 3.2 mm (1/8 inch) diameter 1x19 wire ropes galvanized steel, powder coated black, by Cable Moore or equivalent. Cables shall be tensioned to 350 pound force maximum at both ends with Tuner Turnbuckle tensioners by Cable Moore or equivalent.
6. Gate hinges shall be 120 mm weld-on fixed hinge pin stainless steel #SSWM048FP, powder coated black, by H.A.Guden or equivalent.
7. Cable/wire mesh connections shall be galvanized steel "Separator clamps", powder coated black, by Cable Moore or equivalent.
8. For safety gates at Elev 13.000 m, see "Road Plans".
9. The Contractor shall field verify the clear distance between tower shafts at all gates and enclosures elevations prior to fabrication.
10. For elevator safety gate details at Elevator Stop #6, see "Tower Elevator Enclosure Details No.5" sheet. 2
11. For parapet safety enclosure details, see "Tower Elevator Enclosure Details No.6" sheet.

100 % PS&E

TIME PLOTTED => 10:07:25
DATE PLOTTED => 13 JUN 2012
USERNAME => DWinrow

CONTRACT CHANGE ORDER NO.
SHEET ___ OF ___ ___

REQUESTS FOR INFORMATION NOT ADDRESSED IN THIS CCO REMAIN IN FORCE

MARK	DATE	DESCRIPTIONS	BY	CH'D	CCO#
3	06/13/12	TOWER ELEVATOR EXTENSION	AB	TH	203S2
2	11/04/11	TOWER ELEVATOR EXTENSION	AB	TH	203S2
1	11/02/11	ELEVATOR DETAILS	GM	TH	85
0	08/26/11	ELEVATOR DETAILS	GM	TH	85

REVISIONS

R. Valizadeh/V. Toan/Y.L./W.L./F.C.
DESIGN OVERSIGHT
Roya Valizadeh / Vong Toan / Y. Liu
SIGN OFF DATE 06/13/12

Rev. Date: 5-18-98

	BY	CHECKED
DESIGN	G. Mok	T. Ho
DETAILS	G. Mok	T. Ho
QUANTITIES	G. Mok	T. Ho

PREPARED FOR THE STATE OF CALIFORNIA DEPARTMENT OF TRANSPORTATION

ALL DIMENSIONS ARE IN MILLIMETERS UNLESS OTHERWISE SHOWN

R. Manzanarez
PROJECT ENGINEER

BRIDGE NO. 34-0006L/R
KILOMETER POST 13.2/13.9

SAN FRANCISCO OAKLAND BAY BRIDGE
EAST SPAN SEISMIC SAFETY PROJECT
SELF-ANCHORED SUSPENSION BRIDGE
(SUPERSTRUCTURE & TOWER)

TOWER ELEVATOR ENCLOSURE DETAILS NO. 1

ORIGINAL SCALE IN MILLIMETERS FOR REDUCED PLANS 0 10 20 30 40 50 60 70 80 90 100

CU 04
EA 0120F1

DISREGARD PRINTS BEARING EARLIER REVISION DATES 08/26/11

REVISION DATES (PRELIMINARY STAGE ONLY)

SHEET 523S1R3 OF

FILE => L:\BB\04-012001\SAS\Contract Plans and CCO\CCO\CCO#203S2\4-Revision 06-13-12\DGN\akele03.dgn