DIST.	COUNTY	ROUTE	KILOMETER POST TOTAL PROJECT	SHEET NO.	TOTAL SHEETS
04	SF	80	13.2/13.9	938S9	1204

REGISTERED ENGINEER - CIVIL

09-16-11

PLANS APPROVAL DATE

REGISTERED PROFESSIONAL ENGINEER Marwan N. Nader No. C 054426 Exp. 12/31/11 CIVIL STATE OF CALIFORNIA

The State of California or its officers or agents shall not be responsible for the accuracy or completeness of electronic copies of this plan sheet.

T.Y. LIN / MOFFATT & NICHOL
825 BATTERY STREET
SAN FRANCISCO, CA 94111

Caltrans now has a web site! To get to the web site, go to: http://www.dot.ca.gov

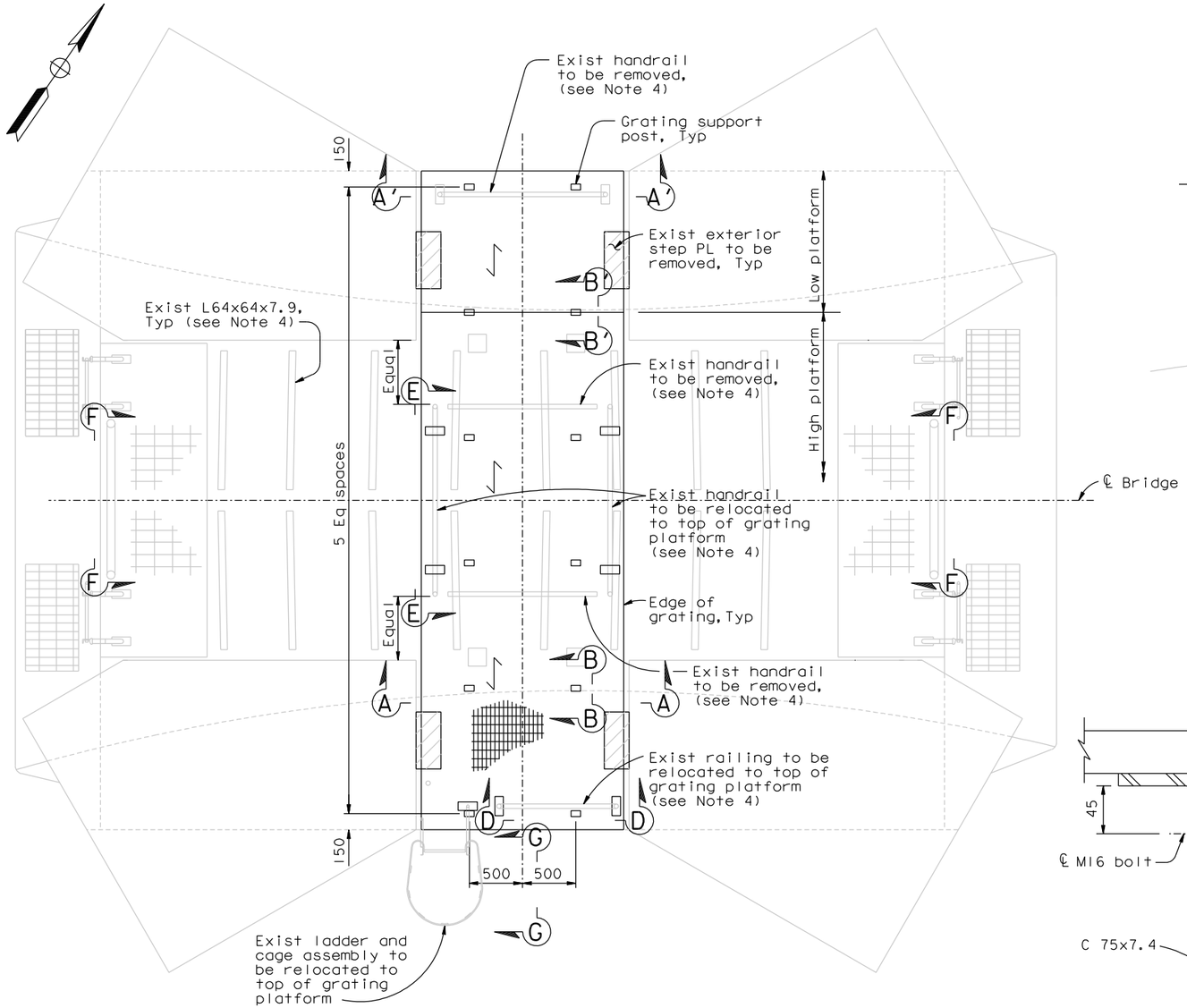

PLAN AT ELEV 156.750
1:25
(Top of tower head diaphragm PL)

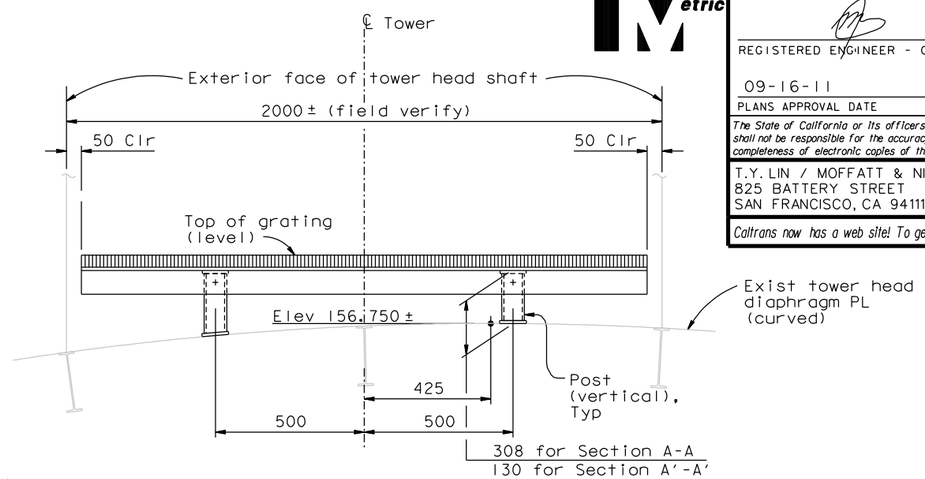

SECTION A-A (Section A'-A', similar)
1:10

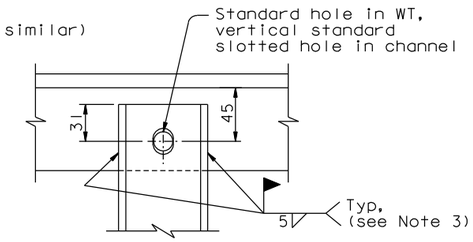

SECTION C-C
1:2.5

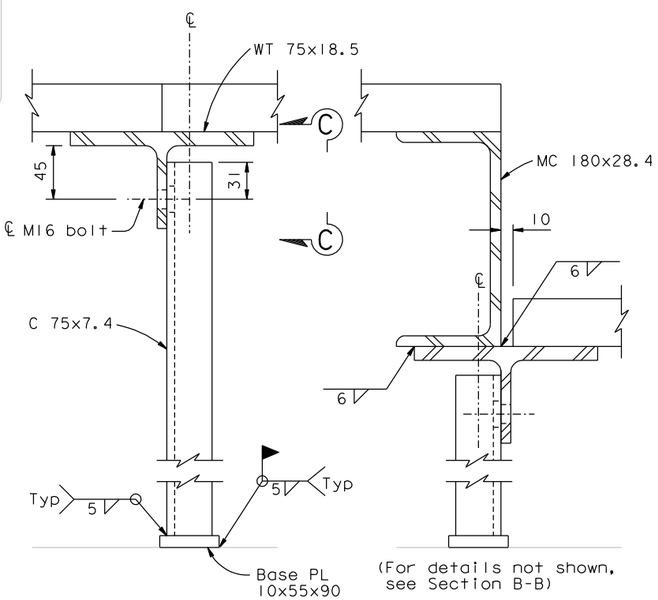

SECTION B-B
1:2.5

SECTION B'-B'
1:2.5

LEGEND:

Direction of bearing bars

NOTES:

1. The Contractor shall provide steel grating with fasteners. The grating shall be rated to support 5 kN/m2 loading with deflection not greater than 1 mm. Grating shall be secured with clamps to support beams.
2. The top of the grating shall be level.
3. Welding of channel to WT shall be performed after top of WT is level.
4. After railing removal, all bolt holes in the existing tower head diaphragm plate shall be plugged using M16 HS bolts (or imperial equivalent at the Contractor's option) with washer underneath the nut and bolt head. Bolt head shall be on the outside.
5. For View D-D, E-E and F-F, see "Tower Access Details No.32" sheet.
6. For View G-G, see "Tower Access Details No.33" sheet.
7. Any angle or portion of angle in conflict with MEP conduits shall be removed.

CONTRACT CHANGE ORDER NO. ____
SHEET ___ OF ___

REQUESTS FOR INFORMATION NOT ADDRESSED IN THIS CCO REMAIN IN FORCE

ALL DIMENSIONS ARE IN MILLIMETERS UNLESS OTHERWISE SHOWN

R. Valizadeh/V. Toan/Y.L./W.L./F.C.
DESIGN OVERSIGHT
SIGN OFF DATE 09/16/11

MARK	DATE	DESCRIPTIONS	BY	CH'D	CCO#
0	09/16/11	TOWER SUSPENDER CABLE & ELEVATOR	NV	MN	203S1

REVISIONS

DESIGN	BY N. Vo	CHECKED M. Nader	
DETAILS	BY N. Vo	CHECKED M. Nader	
QUANTITIES	BY N. Vo	CHECKED M. Nader	

PREPARED FOR THE STATE OF CALIFORNIA DEPARTMENT OF TRANSPORTATION

R. Manzanarez
PROJECT ENGINEER

BRIDGE NO. 34-0006L/R
KILOMETER POST 13.2/13.9

SAN FRANCISCO OAKLAND BAY BRIDGE
EAST SPAN SEISMIC SAFETY PROJECT
SELF-ANCHORED SUSPENSION BRIDGE
(SUPERSTRUCTURE & TOWER)

TOWER ACCESS DETAILS NO.31

Rev. Date: 5-18-98

ORIGINAL SCALE IN MILLIMETERS FOR REDUCED PLANS 0 10 20 30 40 50 60 70 80 90 100

CU 04
EA 0120F1

DISREGARD PRINTS BEARING EARLIER REVISION DATES → 09/16/11

REVISION DATES (PRELIMINARY STAGE ONLY)

SHEET 521S9 OF

FILE => I:\bb\04-012001\sas\contract plans and cco\cco\cco#203s1\1-original 09-16-11\dgn\akacc22j.dgn

100% PS&E

USERNAME => DWinrow DATE PLOTTED => 16 SEP 2011 TIME PLOTTED => 11:25:20