DIST.	COUNTY	ROUTE	KILOMETER POST TOTAL PROJECT	SHEET NO.	TOTAL SHEETS
04	SF	80	13.2/13.9	932S4R2	1204

Caltrans Metric

REGISTERED ENGINEER - CIVIL

10-30-09
PLANS APPROVAL DATE

REGISTERED PROFESSIONAL ENGINEER Marwan N. Nader No. C 054426 Exp. 12/31/11 CIVIL STATE OF CALIFORNIA

The State of California or its officers or agents shall not be responsible for the accuracy or completeness of electronic copies of this plan sheet.

T.Y. LIN / MOFFATT & NICHOL
825 BATTERY STREET
SAN FRANCISCO, CA 94111

Caltrans now has a web site! To get to the web site, go to: http://www.dot.ca.gov

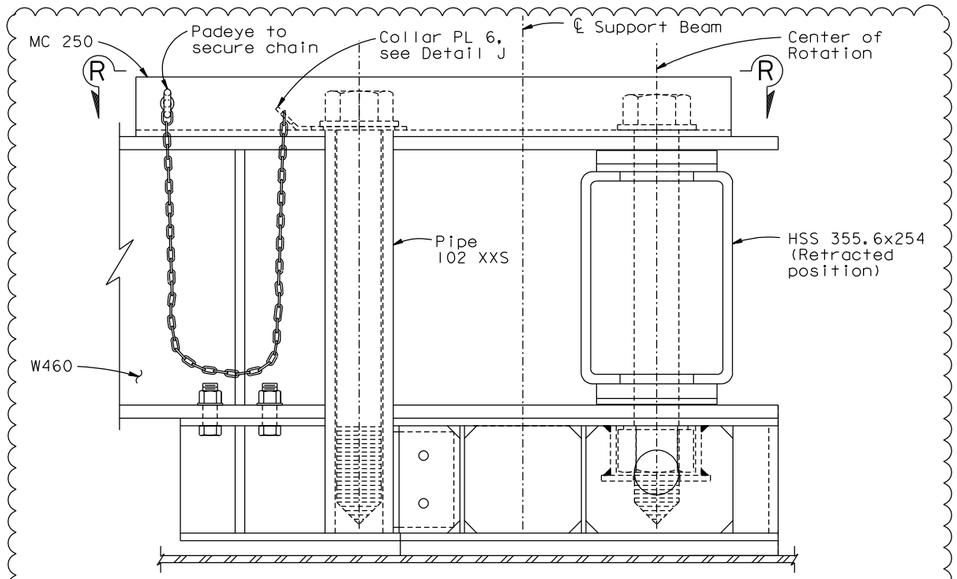

DETAIL G
1:5

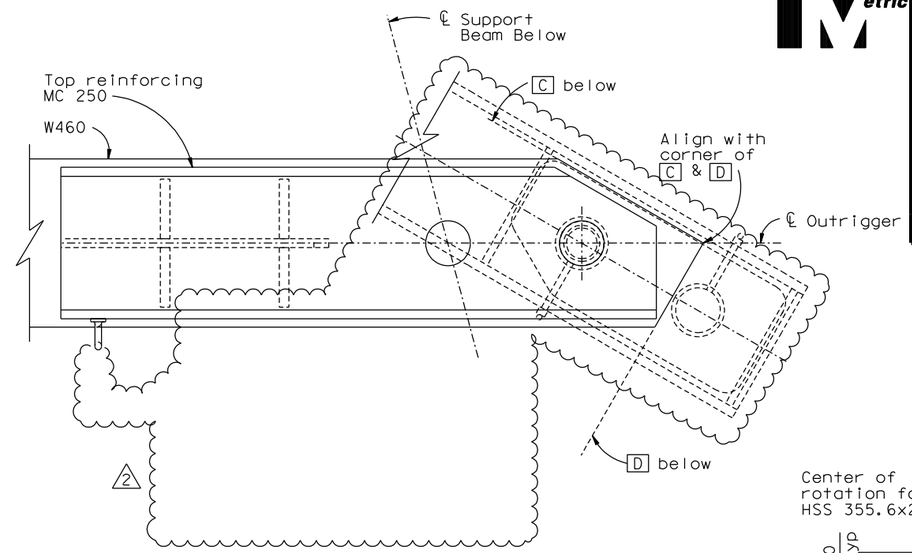

SECTION R-R
1:5

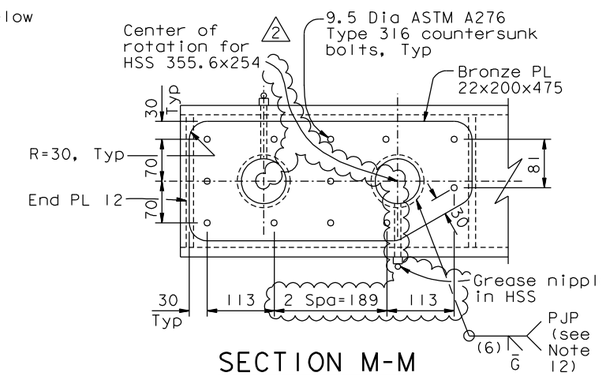

SECTION M-M
1:5
(Bottom Bronze PL shown, top Bronze PL similar)

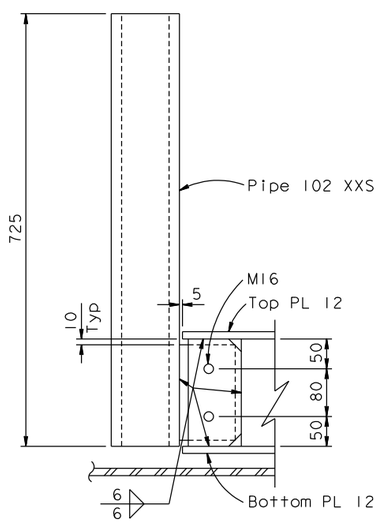

SECTION P-P
1:5

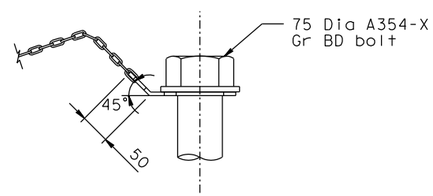

SECTION Q-Q
1:5

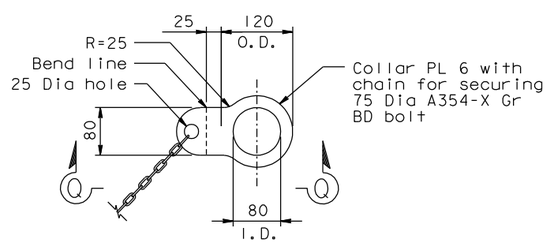

DETAIL J
1:5

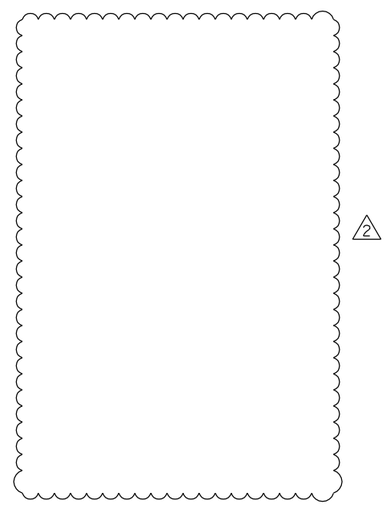

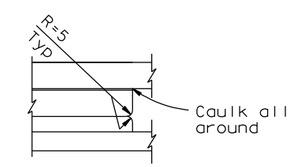

DETAIL K
1:2.5

NOTES:

1. The exterior pipe sleeve shall be placed to bear on the flanges of W460. Adjust thickness of neoprene strips as needed.

CONTRACT CHANGE ORDER NO. _____
SHEET ____ OF ____

REQUESTS FOR INFORMATION NOT ADDRESSED IN THIS CCO REMAIN IN FORCE

MARK	DATE	DESCRIPTIONS	BY	CH'D	CCO#
2	09/16/11	TOWER SUSPENDER CABLE & ELEVATOR	NV	MN	203S1
1	06/14/11	TOWER BOOM BEARINGS	CC	MN	128S1
0	10/30/09	TOWER MAINTENANCE ENHANCEMENTS	JC	MN	128

REVISIONS

R. Valizadeh/V. Toan/Y.L./W.L./F.C.
DESIGN OVERSIGHT
Reza Valizadeh / Vang P. Toan / Y. Liu
SIGN OFF DATE 09/16/11

Rev. Date: 5-18-98

	BY	CHECKED
DESIGN	J. Chan	M. Nader
DETAILS	G. Mok	C. Choi
QUANTITIES	M. Neal	R. Boundouki

PREPARED FOR THE STATE OF CALIFORNIA DEPARTMENT OF TRANSPORTATION

ALL DIMENSIONS ARE IN MILLIMETERS UNLESS OTHERWISE SHOWN

ORIGINAL SCALE IN MILLIMETERS FOR REDUCED PLANS 0 10 20 30 40 50 60 70 80 90 100

R. Manzanarez
PROJECT ENGINEER

BRIDGE NO. 34-0006L/R
KILOMETER POST 13.2/13.9

CU 04
EA 0120F1

DISREGARD PRINTS BEARING EARLIER REVISION DATES 10/30/09

SAN FRANCISCO OAKLAND BAY BRIDGE
EAST SPAN SEISMIC SAFETY PROJECT
SELF-ANCHORED SUSPENSION BRIDGE
(SUPERSTRUCTURE & TOWER)

TOWER ACCESS DETAILS NO. 16D

REVISION DATES (PRELIMINARY STAGE ONLY) 10/30/09

SHEET 515S4R2 OF

FILE => I:\bb\04-012001\sas\contract plans and cco\cco\cco#203s1\1-original 09-16-11\dgn\akacc16s4.dgn

100% PS&E

USERNAME => DWinrow DATE PLOTTED => 16 SEP 2011 TIME PLOTTED => 11:24:34