DIST.	COUNTY	ROUTE	KILOMETER POST TOTAL PROJECT	SHEET NO.	TOTAL SHEETS
04	SF	80	13.2/13.9	932S3R1	1204

REGISTERED ENGINEER - CIVIL

10-30-09
PLANS APPROVAL DATE

REGISTERED PROFESSIONAL ENGINEER Marwan N. Nader No. C 054426 Exp. 12/31/11 CIVIL STATE OF CALIFORNIA

The State of California or its officers or agents shall not be responsible for the accuracy or completeness of electronic copies of this plan sheet.

T.Y. LIN / MOFFATT & NICHOL
825 BATTERY STREET
SAN FRANCISCO, CA 94111

Caltrans now has a web site! To get to the web site, go to: http://www.dot.ca.gov

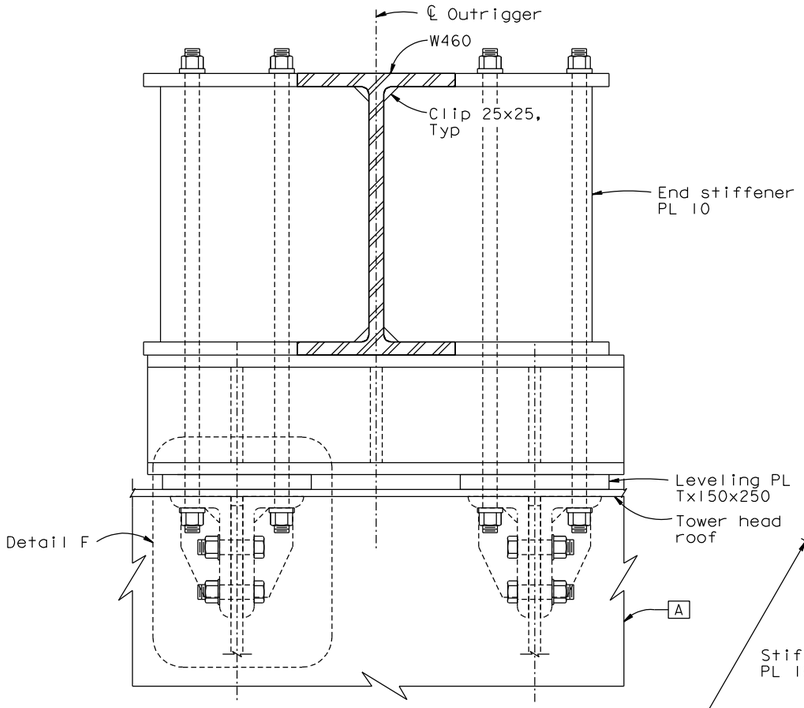

SECTION J-J
1:5

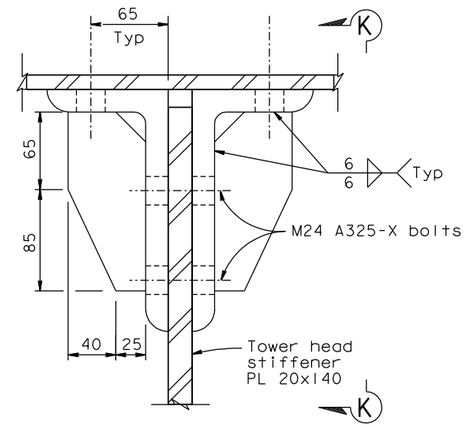

DETAIL F
1:2.5

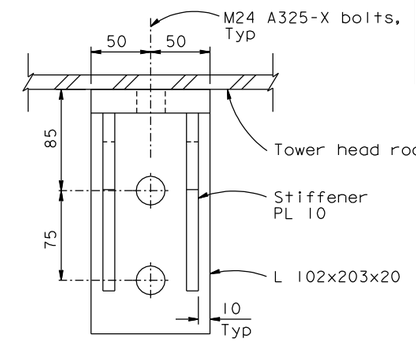

SECTION K-K
1:2.5

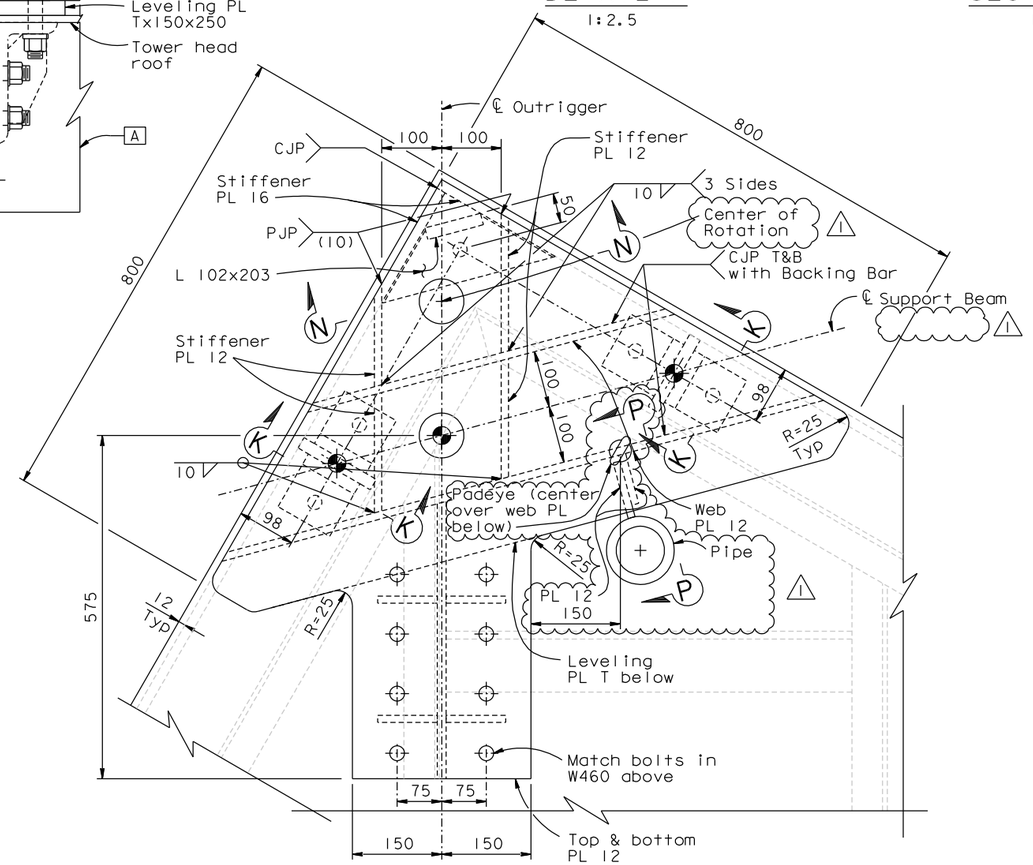

DETAIL E
1:5

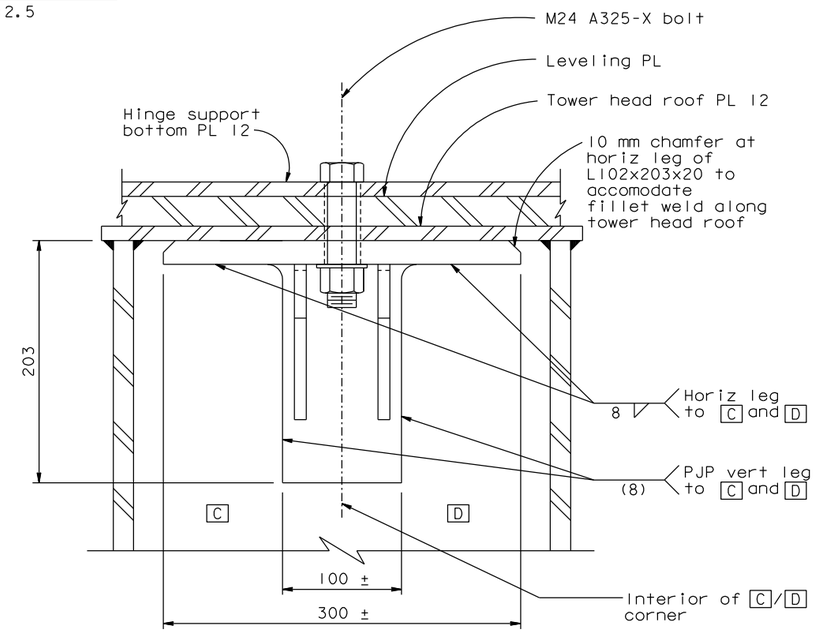

SECTION N-N
1:2.5

NOTES:

1. For Section P-P, see "Tower Access Details No. 16D" sheet.

CONTRACT CHANGE ORDER NO. _____
SHEET ___ OF ___

REQUESTS FOR INFORMATION NOT ADDRESSED IN THIS CCO REMAIN IN FORCE

ALL DIMENSIONS ARE IN MILLIMETERS UNLESS OTHERWISE SHOWN

R. Valizadeh/V. Toan/Y.L./W.L./F.C.
DESIGN OVERSIGHT
SIGN OFF DATE 09/16/11

MARK	DATE	DESCRIPTIONS	BY	CH'D	CCO#
1	09/16/11	TOWER SUSPENDER CABLE & ELEVATOR	NV	MN	203S1
0	10/30/09	TOWER MAINTENANCE ENHANCEMENTS	JC	MN	128

REVISIONS

DESIGN	BY J. Chan	CHECKED M. Nader	
DETAILS	BY G. Mok	CHECKED C. Choi	
QUANTITIES	BY M. Neal	CHECKED R. Boundouki	

PREPARED FOR THE STATE OF CALIFORNIA DEPARTMENT OF TRANSPORTATION

R. Manzanarez
PROJECT ENGINEER

BRIDGE NO. 34-0006L/R
KILOMETER POST 13.2/13.9

SAN FRANCISCO OAKLAND BAY BRIDGE
EAST SPAN SEISMIC SAFETY PROJECT
SELF-ANCHORED SUSPENSION BRIDGE
(SUPERSTRUCTURE & TOWER)

TOWER ACCESS DETAILS NO. 16C

Rev. Date: 5-18-98

ORIGINAL SCALE IN MILLIMETERS FOR REDUCED PLANS 0 10 20 30 40 50 60 70 80 90 100

CU 04
EA 0120F1

DISREGARD PRINTS BEARING EARLIER REVISION DATES 10/30/09

REVISION DATES (PRELIMINARY STAGE ONLY)

SHEET 515S3R1 OF

FILE => I:\bb\04-012001\sas\contract plans and cco\cco\cco#203s1\1-original 09-16-11\dgn\akacc16s3.dgn

100% PS&E

USERNAME => DWinrow DATE PLOTTED => 16 SEP 2011 TIME PLOTTED => 11:23:41