DIST.	COUNTY	ROUTE	KILOMETER POST TOTAL PROJECT	SHEET NO.	TOTAL SHEETS
04	SF	80	13.2/13.9	932SIRI	1204

Caltrans Metric

REGISTERED ENGINEER - CIVIL

10-30-09
PLANS APPROVAL DATE

REGISTERED PROFESSIONAL ENGINEER Marwan N. Nader No. C 054426 Exp. 12/31/11 CIVIL STATE OF CALIFORNIA

The State of California or its officers or agents shall not be responsible for the accuracy or completeness of electronic copies of this plan sheet.

T.Y. LIN / MOFFATT & NICHOL
825 BATTERY STREET
SAN FRANCISCO, CA 94111

Caltrans now has a web site! To get to the web site, go to: http://www.dot.ca.gov

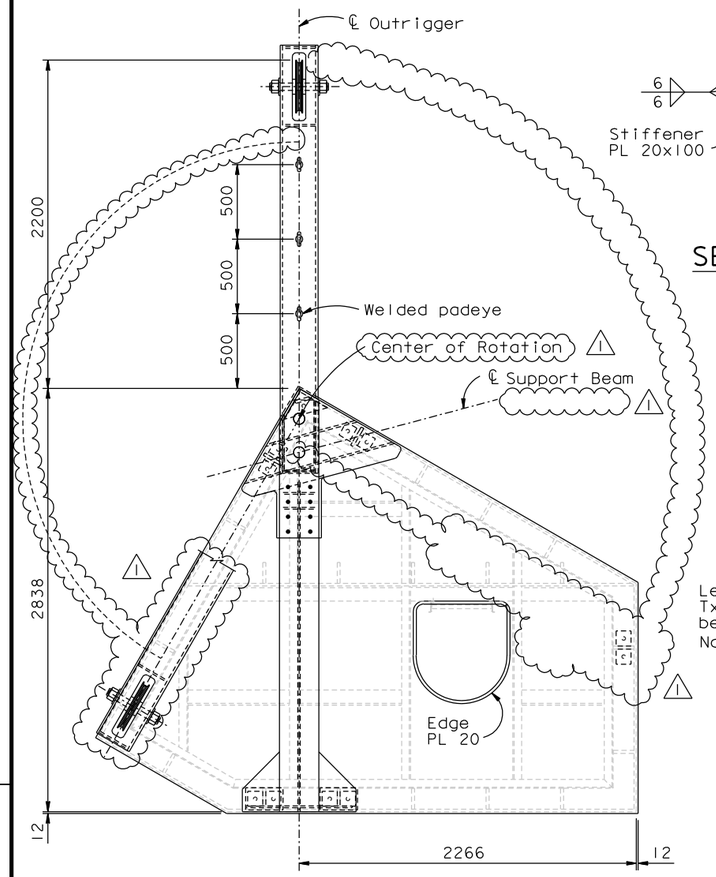

DETAIL A
OUTRIGGER LAYOUT
1:20

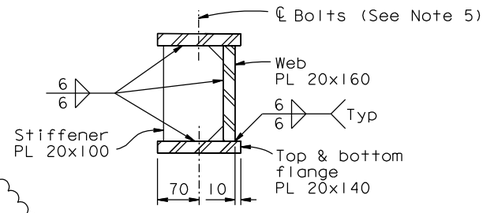

SECTION A-A
1:5

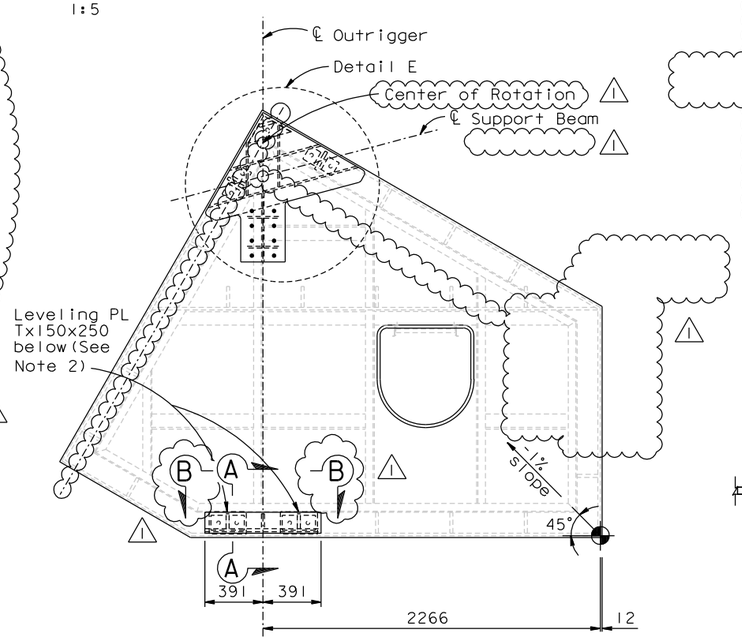

SUPPORT BEAMS LAYOUT
1:20

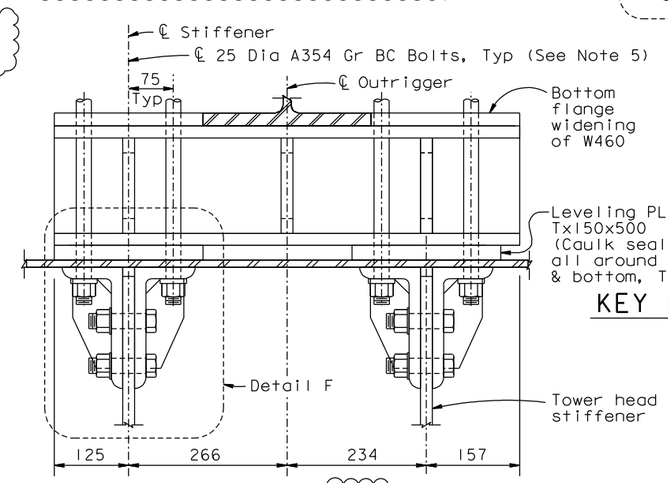

SECTION B-B
1:5

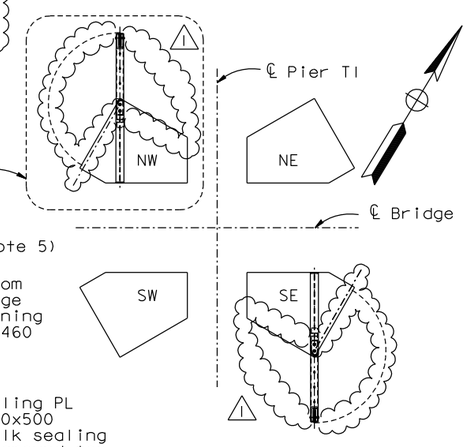

KEY PLAN @ ELEV 160.00 M
1:125

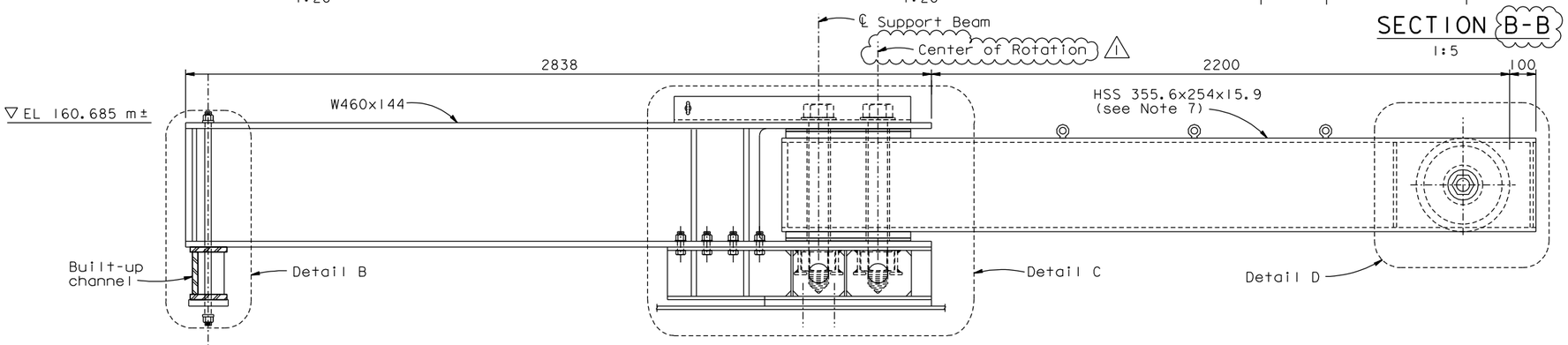

ELEVATION
1:10

NOTES:

1. The outrigger beams shall be installed in a leveled position.
2. Thickness "T" of leveling plates varies due to the drainage slope shown.
3. For Details B, C and D, see "Tower Access Details No. 16B" sheet.
4. For Details E and F, see "Tower Access Details No. 16C" sheet.
5. All exposed gaps between bolt and bolt hole shall be caulked.
6. The neoprene strip shall conform with Section 51-1.145, "Strip Waterstops", of the Standard Specifications.
7. At the Contractor's option, the "Alternate built-up box shape" may be used in lieu of HSS 355.6, see "Tower Access Details No. 16B" sheet.

CONTRACT CHANGE ORDER NO. ____
SHEET ___ OF ___

REQUESTS FOR INFORMATION NOT ADDRESSED IN THIS CCO REMAIN IN FORCE

ALL DIMENSIONS ARE IN MILLIMETERS UNLESS OTHERWISE SHOWN

R. Valizadeh/V. Toan/Y.L./W.L./F.C.
DESIGN OVERSIGHT
Y. Liu
SIGN OFF DATE 09/16/11

MARK	DATE	DESCRIPTIONS	BY	CH'D	CCO#
1	09/16/11	TOWER SUSPENDER CABLE & ELEVATOR	NV	MN	203S1
0	10/30/09	TOWER MAINTENANCE ENHANCEMENTS	JC	MN	128

REVISIONS

	BY	CHECKED
DESIGN	J. Chan	M. Nader
DETAILS	G. Mok	C. Choi
QUANTITIES	M. Neal	R. Boundouki

PREPARED FOR THE STATE OF CALIFORNIA DEPARTMENT OF TRANSPORTATION

R. Manzanarez
PROJECT ENGINEER

BRIDGE NO. 34-0006L/R
KILOMETER POST 13.2/13.9

SAN FRANCISCO OAKLAND BAY BRIDGE
EAST SPAN SEISMIC SAFETY PROJECT
SELF-ANCHORED SUSPENSION BRIDGE
(SUPERSTRUCTURE & TOWER)

TOWER ACCESS DETAILS NO. 16A

Rev. Date: 5-18-98

ORIGINAL SCALE IN MILLIMETERS FOR REDUCED PLANS 0 10 20 30 40 50 60 70 80 90 100

CU 04
EA 0120F1

DISREGARD PRINTS BEARING EARLIER REVISION DATES 10/30/09

REVISION DATES (PRELIMINARY STAGE ONLY)

SHEET 515SIRI OF

FILE => I:\bb\04-012001\sas\contract plans and cco\cco\cco*203s1\1-original 09-16-11\dgn\akacc16s1.dgn

USERNAME => DWinrow DATE PLOTTED => 16 SEP 2011 TIME PLOTTED => 11:21:56

100% PS&E