DIST.	COUNTY	ROUTE	KILOMETER POST TOTAL PROJECT	SHEET NO.	TOTAL SHEETS
04	SF	80	13.2/13.9	800S9R1	1204

Caltrans Metric

REGISTERED ENGINEER - CIVIL

05-11-11
PLANS APPROVAL DATE

The State of California or its officers or agents shall not be responsible for the accuracy or completeness of electronic copies of this plan sheet.

REGISTERED PROFESSIONAL ENGINEER Marwan N. Nader No. C 054426 Exp. 12/31/11 CIVIL STATE OF CALIFORNIA

T.Y. LIN / MOFFATT & NICHOL
825 BATTERY STREET
SAN FRANCISCO, CA 94111

Caltrans now has a web site! To get to the web site, go to: http://www.dot.ca.gov

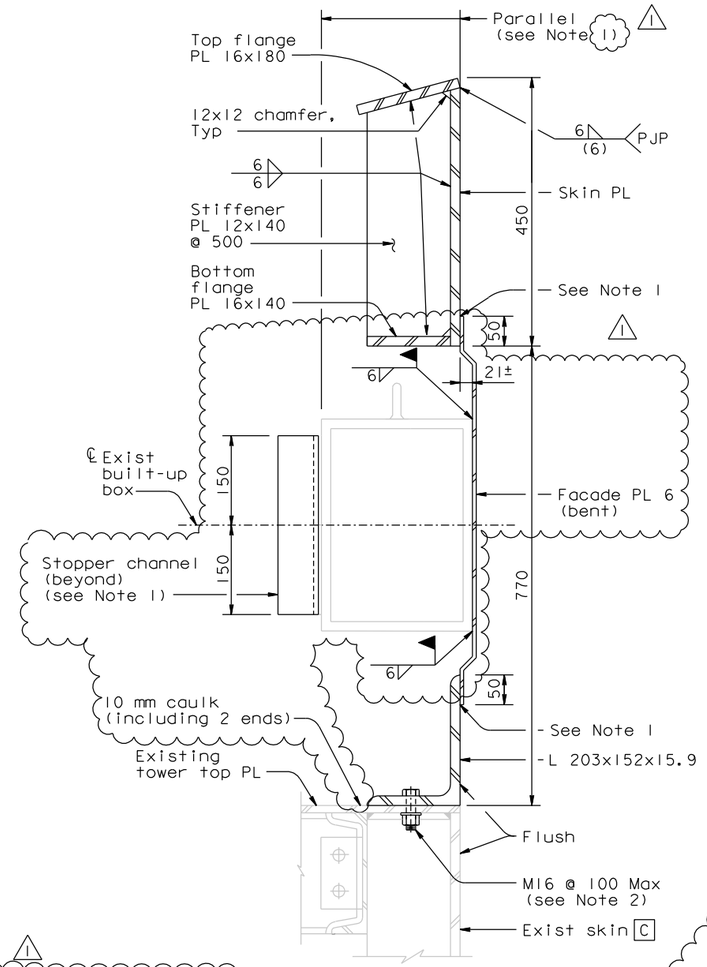

SECTION A-A
1:5

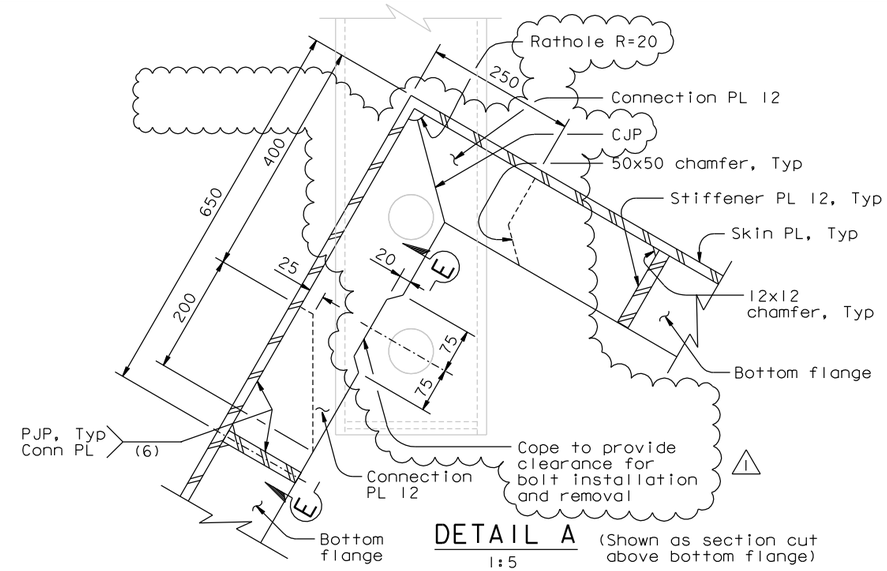

DETAIL A
1:5
(Shown as section cut above bottom flange)

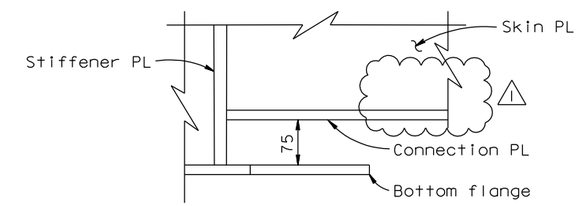

SECTION E-E
1:5

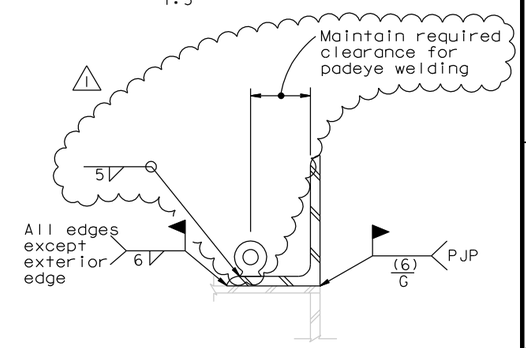

WELDED ANGLE DETAIL
1:5

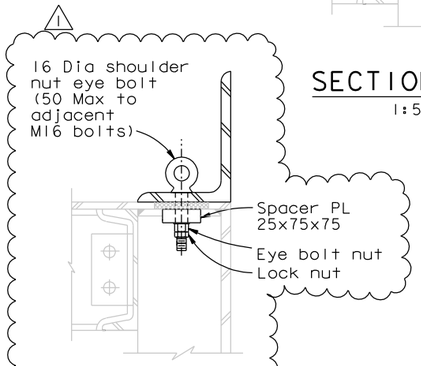

SECTION A'-A'
1:5

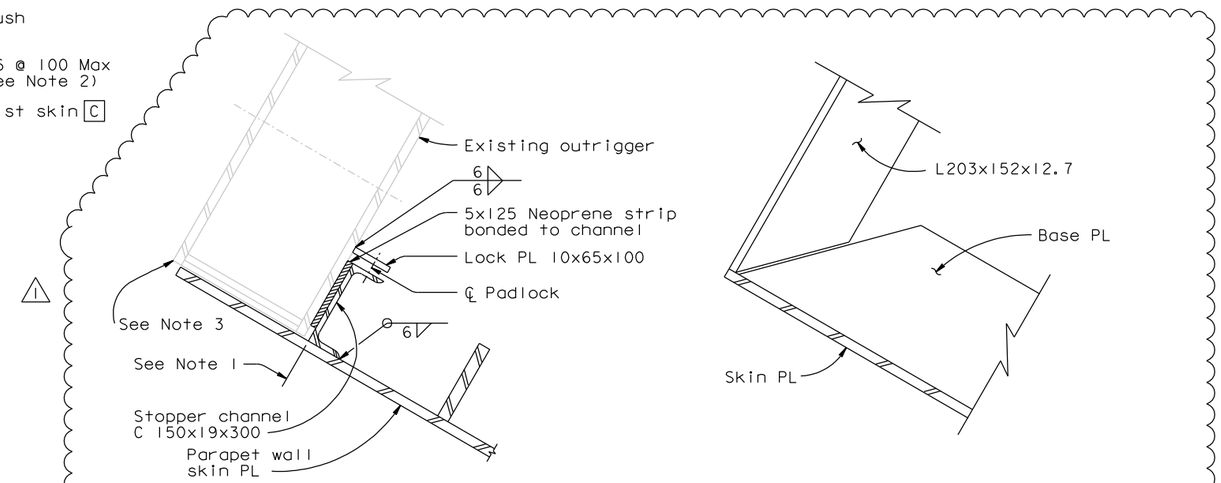

SHOWN AS SECTION CUT THRU CL OUTRIGGER

SHOWN AS SECTION CUT ABOVE BASE PLATE

DETAIL E
1:5
(Not all details shown for clarity)

NOTES:

1. Position stopper to achieve tight fit of facade plate in retracted postion. Outrigger beam shall be parallel to skin plate.
2. At the Contractor's option, angle may be welded in lieu of bolting. See "Welded Angle Detail". Caulking is not required for welding option.
3. Outrigger end may be trimmed up to 5 mm if necessary for clearance with parapet wall skin PL.

CONTRACT CHANGE ORDER NO.
SHEET ____ OF ____

REQUESTS FOR INFORMATION NOT ADDRESSED IN THIS CCO REMAIN IN FORCE

ALL DIMENSIONS ARE IN MILLIMETERS UNLESS OTHERWISE SHOWN

R. Valizadeh/V. Toan/Y.L./W.L./F.C.
DESIGN OVERSIGHT
Roya Valizadeh / Vong Toan / Y. Liu
SIGN OFF DATE 09/16/11

MARK	DATE	DESCRIPTIONS	BY	CH'D	CCO#
1	09/16/11	TOWER SUSPENDER CABLE & ELEVATOR	NV	MN	203S1
0	05/11/11	PARAPET WALL AT TOWER HEAD	NV	MN	196

REVISIONS

	BY	CHECKED
DESIGN	N. Vo	M. Nader
DETAILS	N. Vo	A. Baumberger
QUANTITIES	N. Vo	J. Duxbury

PREPARED FOR THE STATE OF CALIFORNIA DEPARTMENT OF TRANSPORTATION

R. Manzanarez
PROJECT ENGINEER

BRIDGE NO. 34-0006L/R
KILOMETER POST 13.2/13.9

SAN FRANCISCO OAKLAND BAY BRIDGE
EAST SPAN SEISMIC SAFETY PROJECT
SELF-ANCHORED SUSPENSION BRIDGE
(SUPERSTRUCTURE & TOWER)

PARAPET WALL AT TOWER HEAD DETAILS NO. 5

Rev. Date: 5-18-98

ORIGINAL SCALE IN MILLIMETERS FOR REDUCED PLANS 0 10 20 30 40 50 60 70 80 90 100

CU 04
EA 0120F1

DISREGARD PRINTS BEARING EARLIER REVISION DATES 05/11/11

REVISION DATES (PRELIMINARY STAGE ONLY)

SHEET 383S9R2 OF

FILE => I:\bb\04-01200I\sas\contract plans and cco\cco\cco*203s1\1-original 09-16-11\dgn\agtdd05.dgn

100% PS&E

USERNAME => DWinrow DATE PLOTTED => 16 SEP 2011 TIME PLOTTED => 11:20:33