DIST.	COUNTY	ROUTE	KILOMETER POST TOTAL PROJECT	SHEET NO.	TOTAL SHEETS
04	SF	80	13.2/13.9	800S7R1	1204

REGISTERED ENGINEER - CIVIL

05-11-11
PLANS APPROVAL DATE

REGISTERED PROFESSIONAL ENGINEER Marwan N. Nader No. C 054426 Exp. 12/31/11 CIVIL STATE OF CALIFORNIA

The State of California or its officers or agents shall not be responsible for the accuracy or completeness of electronic copies of this plan sheet.

T.Y. LIN / MOFFATT & NICHOL
825 BATTERY STREET
SAN FRANCISCO, CA 94111

Caltrans now has a web site! To get to the web site, go to: http://www.dot.ca.gov

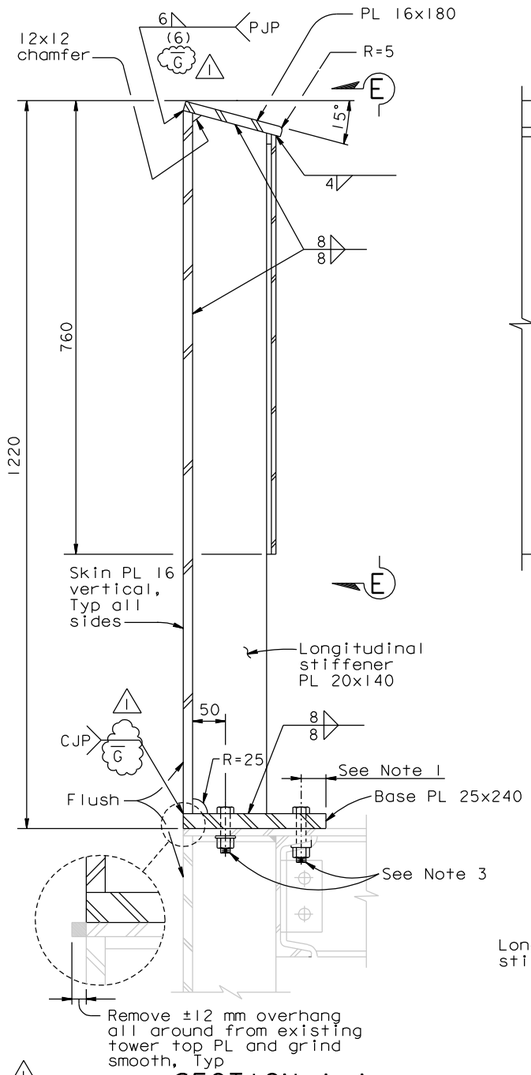

SECTION A-A
1:5

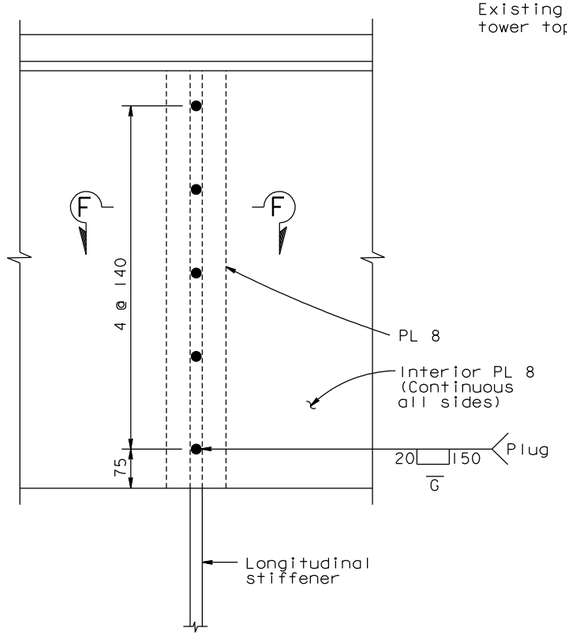

VIEW E-E
1:5

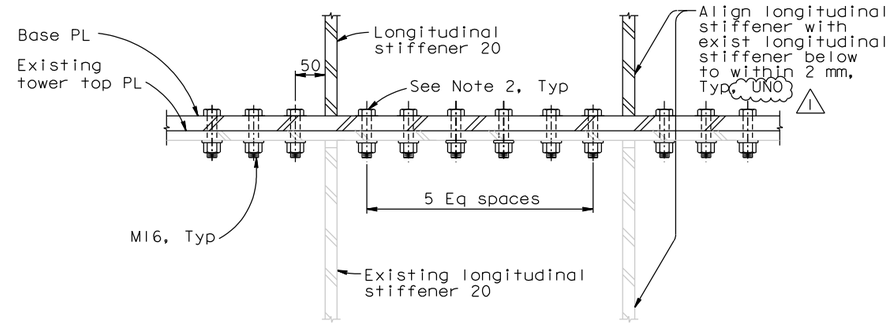

SECTION B-B (Typical at existing longitudinal stiffeners)
1:5

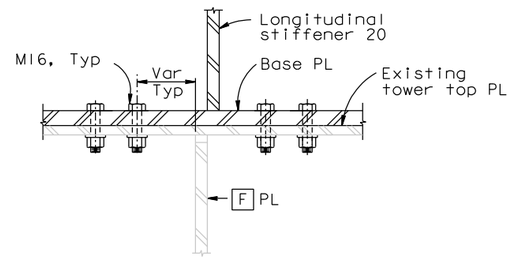

SECTION C-C (Typical at existing F PL)
1:5

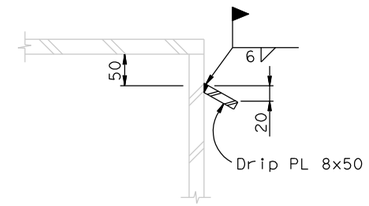

SECTION G-G
1:5

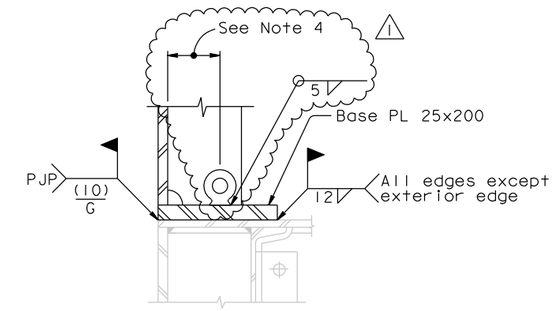

WELDED BASE PLATE DETAIL
1:5

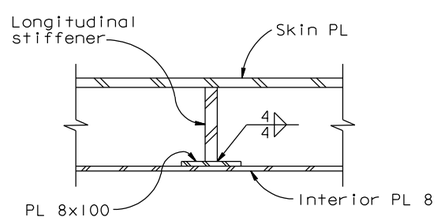

SECTION F-F
1:5

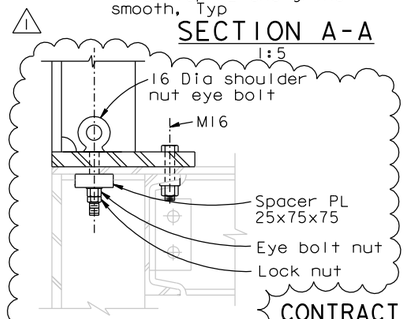

SECTION A'-A'
1:5

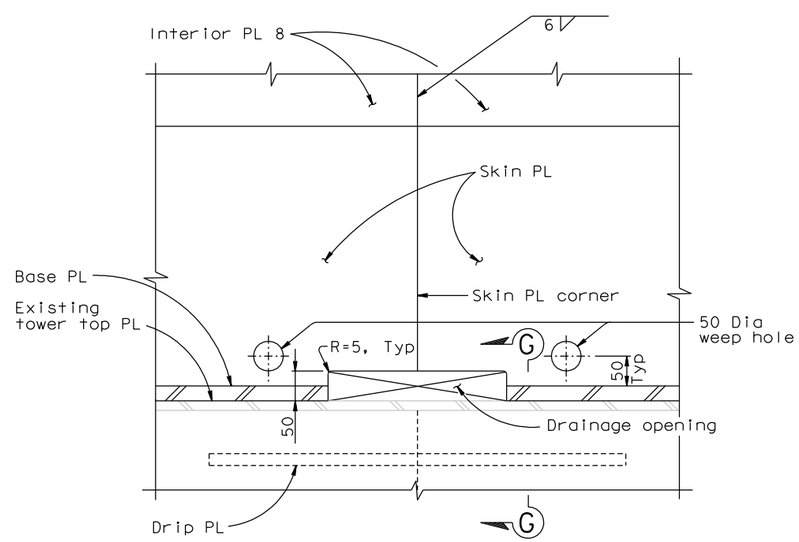

SECTION D-D
1:5

NOTES:

1. Field verify location of channel top flange. Holes to be match-drilled through base PL, existing tower top PL and existing channel top flange.
2. Bolts shall be oriented with bolt head at the top for base PL.
3. At the Contractor's option, base PL may be welded in lieu of bolting. See "Welded Base Plate Detail". 10 mm caulk is not required for welded option.
4. (1) Maintain required clearance between skin plate and adjacent stiffener for all-around welding of padeye to base plate.

CONTRACT CHANGE ORDER NO. _____
SHEET ___ OF ___

REQUESTS FOR INFORMATION NOT ADDRESSED IN THIS CCO REMAIN IN FORCE

ALL DIMENSIONS ARE IN MILLIMETERS UNLESS OTHERWISE SHOWN

R. Valizadeh/V. Toan/Y.L./W.L./F.C.
DESIGN OVERSIGHT
Ryan Valizadeh / Vong Toan / Y. Liu
SIGN OFF DATE 09/16/11

MARK	DATE	DESCRIPTIONS	BY	CH'D	CCO#
1	09/16/11	TOWER SUSPENDER CABLE & ELEVATOR	NV	MN	203S1
0	05/11/11	PARAPET WALL AT TOWER HEAD	NV	MN	196

REVISIONS

	BY	CHECKED	
DESIGN	N. Vo	M. Nader	
DETAILS	N. Vo	A. Baumberger	
QUANTITIES	N. Vo	J. Duxbury	

PREPARED FOR THE STATE OF CALIFORNIA DEPARTMENT OF TRANSPORTATION

R. Manzanarez
PROJECT ENGINEER

BRIDGE NO. 34-0006L/R
KILOMETER POST 13.2/13.9

SAN FRANCISCO OAKLAND BAY BRIDGE
EAST SPAN SEISMIC SAFETY PROJECT
SELF-ANCHORED SUSPENSION BRIDGE
(SUPERSTRUCTURE & TOWER)

PARAPET WALL AT TOWER HEAD DETAILS NO. 3

Rev. Date: 5-18-98

ORIGINAL SCALE IN MILLIMETERS FOR REDUCED PLANS 0 10 20 30 40 50 60 70 80 90 100

CU 04
EA 0120F1

DISREGARD PRINTS BEARING EARLIER REVISION DATES 05/11/11

REVISION DATES (PRELIMINARY STAGE ONLY)

SHEET 383S7R1 OF

FILE => I:\bb\04-012001\sas\contract plans and cco\cco\cco#203s1\1-original 09-16-11\dgn\agtdd03.dgn

USERNAME => DWinrow DATE PLOTTED => 16 SEP 2011 TIME PLOTTED => 11:18:59

100 % PS&E