DIST.	COUNTY	ROUTE	KILOMETER POST TOTAL PROJECT	SHEET NO.	TOTAL SHEETS
04	SF	80	13.2/13.9	800S6R1	1204

REGISTERED ENGINEER - CIVIL

05-11-11

PLANS APPROVAL DATE

REGISTERED PROFESSIONAL ENGINEER Marwan N. Nader No. C 054426 Exp. 12/31/11 CIVIL STATE OF CALIFORNIA

The State of California or its officers or agents shall not be responsible for the accuracy or completeness of electronic copies of this plan sheet.

T.Y. LIN / MOFFATT & NICHOL
825 BATTERY STREET
SAN FRANCISCO, CA 94111

Caltrans now has a web site! To get to the web site, go to: http://www.dot.ca.gov

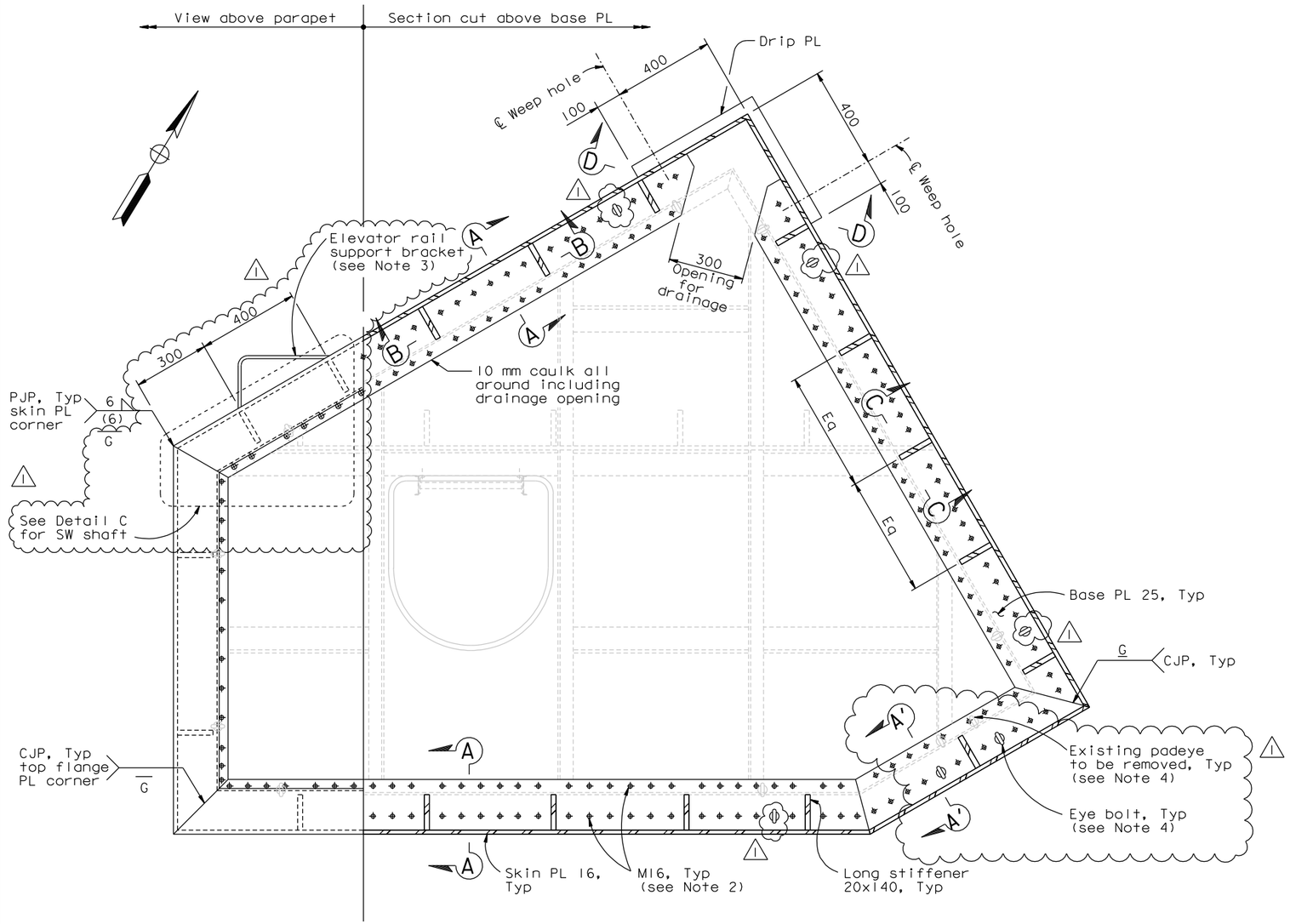

DETAIL A
1:10

(NE shaft shown; SW shaft similar except as noted in Detail C)

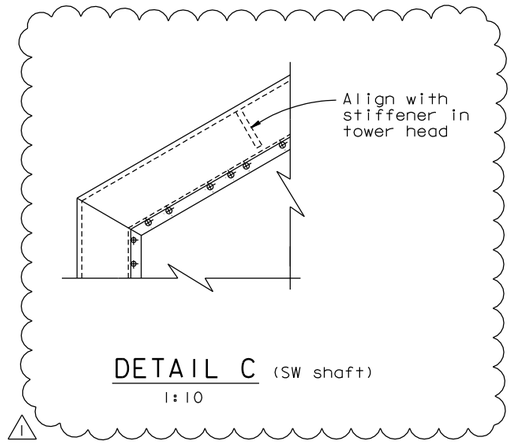

DETAIL C (SW shaft)
1:10

NOTES:

1. For Sections A-A, A'-A', B-B, C-C and D-D, see "Parapet Wall At Tower Head Details No. 3" sheet.
2. At the Contractor's option, 5/8 inch Dia A325 HS bolts may be used in lieu of M16 A325M bolts.
3. For details of elevator rail support bracket, see "Tower Elevator Extension Details" sheets.
4. Replace each existing padeye to be removed as follows:

   Bolted option:

   Install 16 mm Dia x 100 mm long Crosby forged shoulder eye bolt or equivalent at location shown in the base plate (must be between 2 HS bolts and not adjacent to stiffener). Spacer plate shall be provided to ensure full thread engagement of the nut. Nut shall be installed snug-tight. Jam nut or lock nut shall be used to prevent bolt nut from backing off. See Section A'-A'.

   Welded option:

   Install Crosby No. 4 padeye or equivalent as close to skin plate and adjacent stiffener as possible with the required clearance for all-around welding of padeye to base plate.

CONTRACT CHANGE ORDER NO. _____
SHEET ____ OF ____

REQUESTS FOR INFORMATION NOT ADDRESSED IN THIS CCO REMAIN IN FORCE

ALL DIMENSIONS ARE IN MILLIMETERS UNLESS OTHERWISE SHOWN

MARK	DATE	DESCRIPTIONS	BY	CH'D	CCO#
1	09/16/11	TOWER SUSPENDER CABLE & ELEVATOR	NV	MN	203S1
0	05/11/11	PARAPET WALL AT TOWER HEAD	NV	MN	196

REVISIONS

R. Valizadeh/V. Toan/Y.L./W.L./F.C.
DESIGN OVERSIGHT
Roya Valizadeh / Vong Toan / Y. Liu
SIGN OFF DATE 09/16/11

	BY	CHECKED
DESIGN	N. Vo	M. Nader
DETAILS	N. Vo	A. Baumberger
QUANTITIES	N. Vo	J. Duxbury

PREPARED FOR THE STATE OF CALIFORNIA DEPARTMENT OF TRANSPORTATION

R. Manzanarez
PROJECT ENGINEER

BRIDGE NO. 34-0006L/R
KILOMETER POST 13.2/13.9

SAN FRANCISCO OAKLAND BAY BRIDGE
EAST SPAN SEISMIC SAFETY PROJECT
SELF-ANCHORED SUSPENSION BRIDGE
(SUPERSTRUCTURE & TOWER)

PARAPET WALL AT TOWER HEAD DETAILS NO. 2

Rev. Date: 5-18-98

ORIGINAL SCALE IN MILLIMETERS FOR REDUCED PLANS 0 10 20 30 40 50 60 70 80 90 100

CU 04
EA 0120F1

DISREGARD PRINTS BEARING EARLIER REVISION DATES 05/11/11

SHEET 383S6R1 OF

FILE => I:\bb\04-012001\sas\contract plans and cco\cco\cco#203s1\1-original 09-16-11\dgn\agtdd02.dgn

USERNAME => DWinrow DATE PLOTTED => 16 SEP 2011 TIME PLOTTED => 11:18:18

100% PS&E