DIST	COUNTY	ROUTE	KILOMETER POST TOTAL PROJECT	SHEET No.	TOTAL SHEETS
04	SF	80	13.2/13.9	165 S1R1	1204

REGISTERED ELECTRICAL ENGINEER — 8/11/08 DATE

PLANS APPROVAL DATE

REGISTERED PROFESSIONAL ENGINEER — FADI WALIEDDINE No. 11465 Exp. 12/31/2009 ELECTRICAL — STATE OF CALIFORNIA

PB AMERICAS, Inc.
A Parsons Brinckerhoff Company
303 Second St., Suite 700N
San Francisco, CA 94107-1317

The State of California or its officers or agents shall not be responsible for the accuracy or completeness of electronic copies of this plan sheet.

Caltrans now has a web site! To get to the web site, go to http://www.dot.ca.gov

Caltrans Metric

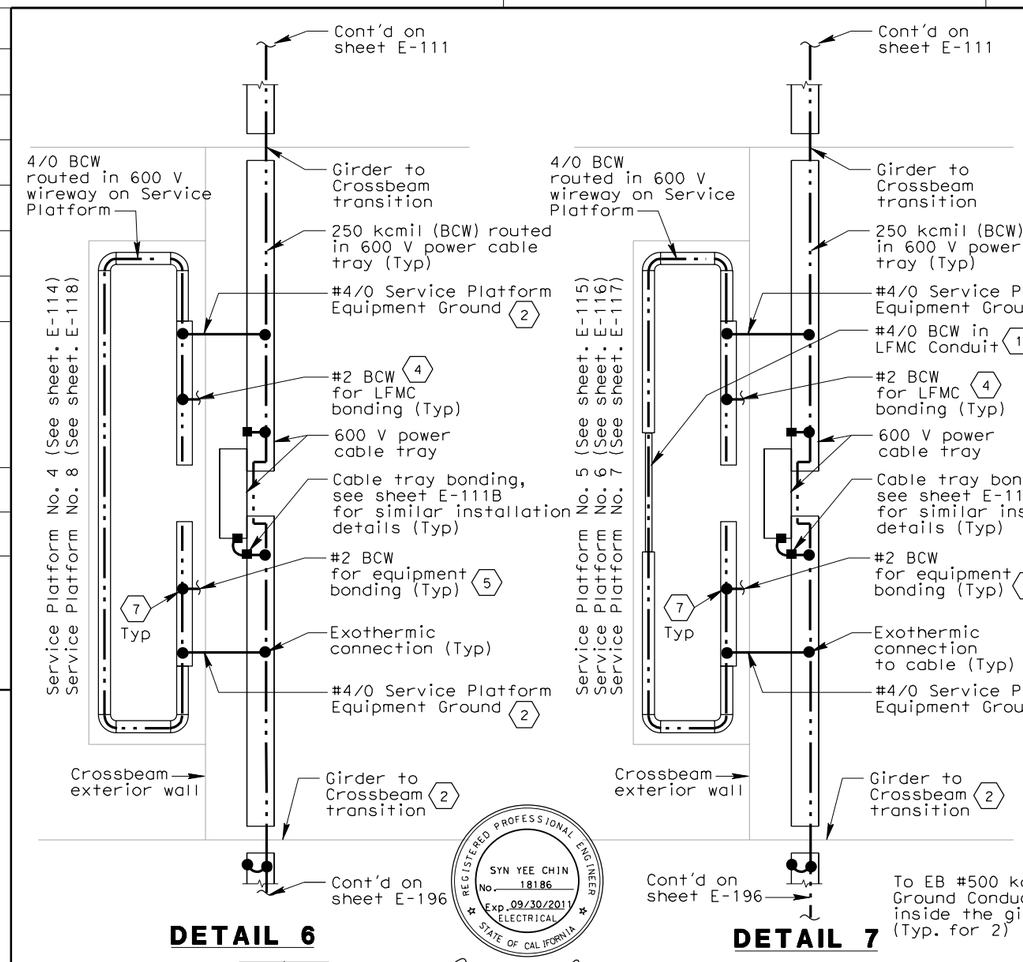

DETAIL 6

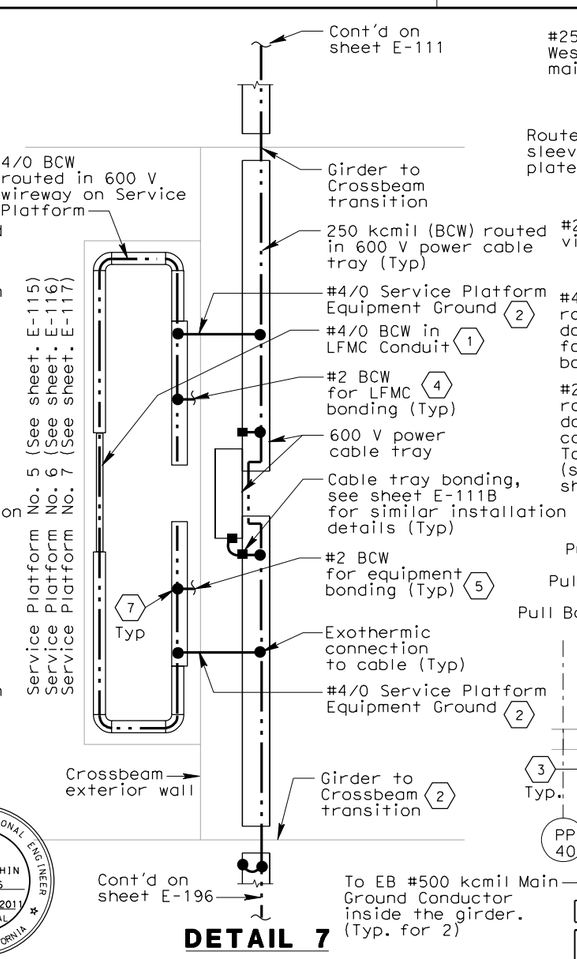

DETAIL 7

REGISTERED PROFESSIONAL ENGINEER — SYN YEE CHIN No. 18186 Exp. 09/30/2011 ELECTRICAL — STATE OF CALIFORNIA

Syn Yee Chin
FOR REVISION ONLY (1)

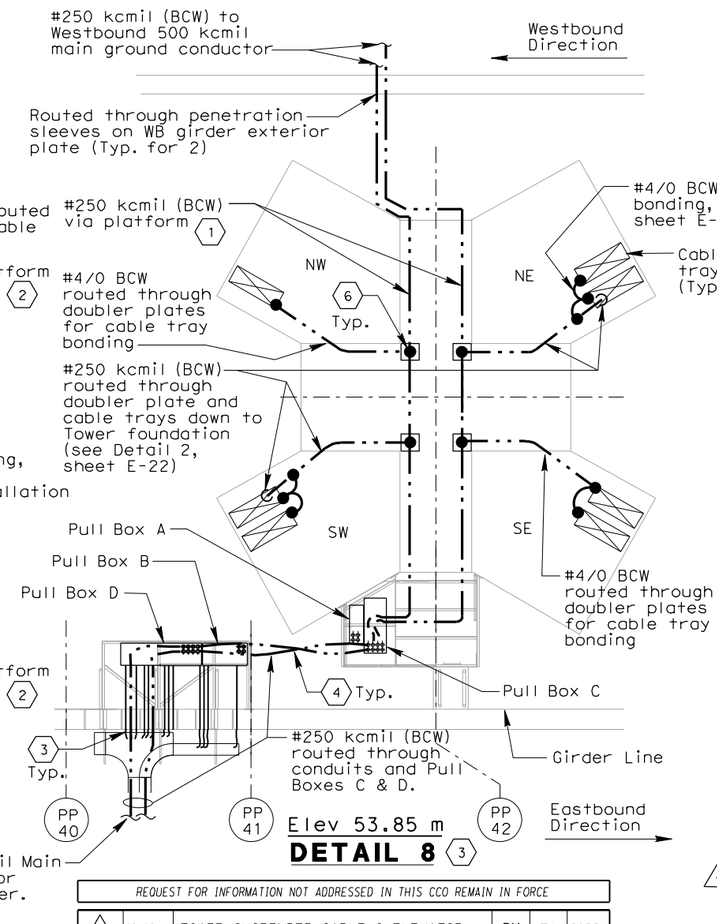

DETAIL 8 (3)

SHEET NOTES:

(1) Ground conductor shall be protected from damage when exposed outside the structures. Route ground cable in liquidtight flexible metal conduit (LFMC) for protection, unless routed in cable tray or wireway unless noted otherwise.

(2) Route #4/0 BCW through crossbeam exterior wall in liquidtight flexible metal conduit via conduit sleeves, see sheets E-114, E-115, E-116, E-117 and E-118.

(3) Install #2 BCW grounding conductors to grounding bushing for bonding conduits to cable tray.

(4) Install #2 BCW inside each liquidtight flex metal conduit and connect between the grounding wire and the conduit grounding bushing, see Detail 7 on sheet E-111B for similar installation.

(5) Ground conductor for equipment bonding shall be routed in the same conduit connected to equipment, see sheets E-71A, E-72A, E-73A, E-74A, E-75A, E-114, E-115, E-116, E-117 and E-118 for equipment arrangement.

(6) Grounding wire splices exposed outside the structures shall be enclosed with NEMA 4X pull box for protection. Where required, mechanical connection using Burndy Versitap Type QPX clamps or equal may be used for splices inside the box in lieu of exothermic weld. Pull box shall be 457 x 305 x 152D or size as required.

(7) Where exothermic weld connection is not feasible inside the wireway, compression type connectors may be used.

NOTES:

1. See sheet E-111 for additional notes and sheet notes.
2. (1) The contractor shall install pull box/JB(s) along conduit runs to limit bends to be three (3) 90 degrees or fewer.

REQUEST FOR INFORMATION NOT ADDRESSED IN THIS CCO REMAIN IN FORCE

MARK	DATE	DESCRIPTIONS	BY	CH'D	CCO#
(1)	09/02/11	TOWER SUSPENDER CABLE & ELEVATOR	RM	TW	203S1
(0)	11/20/09	ELECTRICAL GROUNDING	AG RR	RG	75

REVISIONS

CONTRACT CHANGE ORDER NO. _____
SHEET _____ OF _____

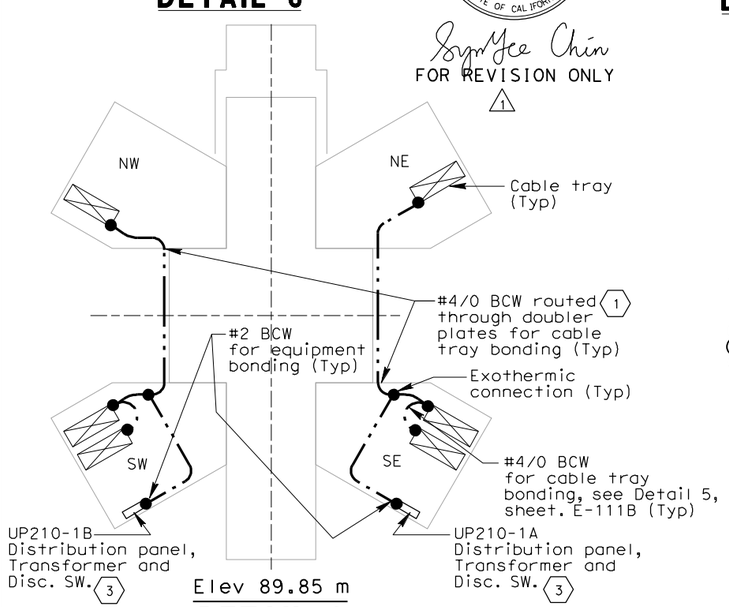

DETAIL 9

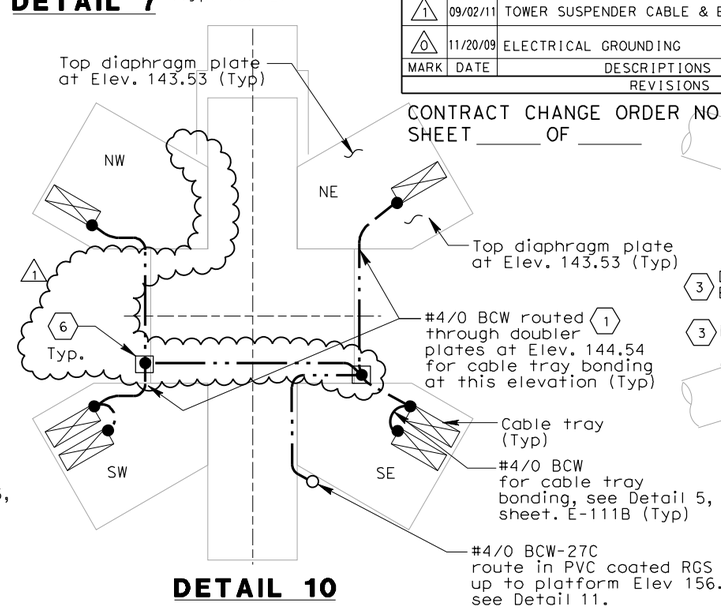

DETAIL 10

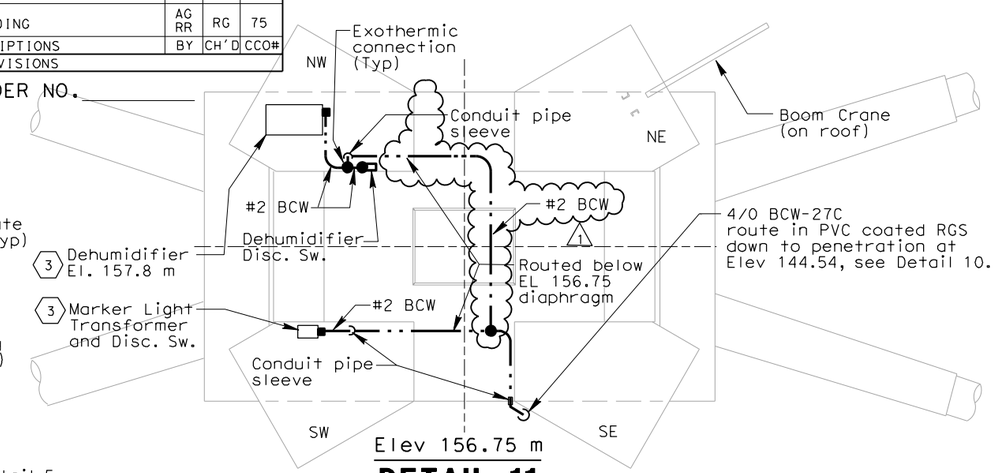

DETAIL 11

DETAILS
SAS SUPERSTRUCTURE GIRDER WESTBOUND GROUNDING DETAILS
NO SCALE

E-111A

THIS PLAN IS ACCURATE FOR ELECTRICAL WORK ONLY.

ALL DIMENSIONS ARE IN MILLIMETERS UNLESS OTHERWISE SHOWN.

FOR REDUCED PLANS ORIGINAL SCALE IS IN MILLIMETERS 0 20 40 60 80

DGN FILE =>04-0120f1_0165S01r01.dgn
USERNAME =>fusco

CU 04251 | EA 0120F1

CALCULATED/ DESIGNED BY	AWG	DATE 08/08	REVISED BY
CHECKED BY	RG	08/08	DATE REVISED

DESIGN OVERSIGHT — BEHZAD GOLEMOHAMMADI

STATE OF CALIFORNIA - DEPARTMENT OF TRANSPORTATION — Caltrans

LAST REVISION 00-00-00 — DATE PLOTTED => 8/31/2011 TIME PLOTTED => 3:44:42 PM

DIST	COUNTY	ROUTE	KILOMETER POST TOTAL PROJECT	SHEET No	TOTAL SHEETS
04	SF	80	13.2/13.9	261 S4R2	1204

REGISTERED ELECTRICAL ENGINEER 03/05/08 DATE

PLANS APPROVAL DATE

REGISTERED PROFESSIONAL ENGINEER S. A. ESTOQUE, JR. No. E-10151 Exp. 12/31/2008 ELECTRICAL STATE OF CALIFORNIA

PB AMERICAS, Inc.
A Parsons Brinckerhoff Company
303 Second St., Suite 700N
San Francisco, CA 94107-1317

The State of California or its officers or agents shall not be responsible for the accuracy or completeness of electronic copies of this plan sheet.

Caltrans now has a web site! To get to the web site, go to http://www.dot.ca.gov

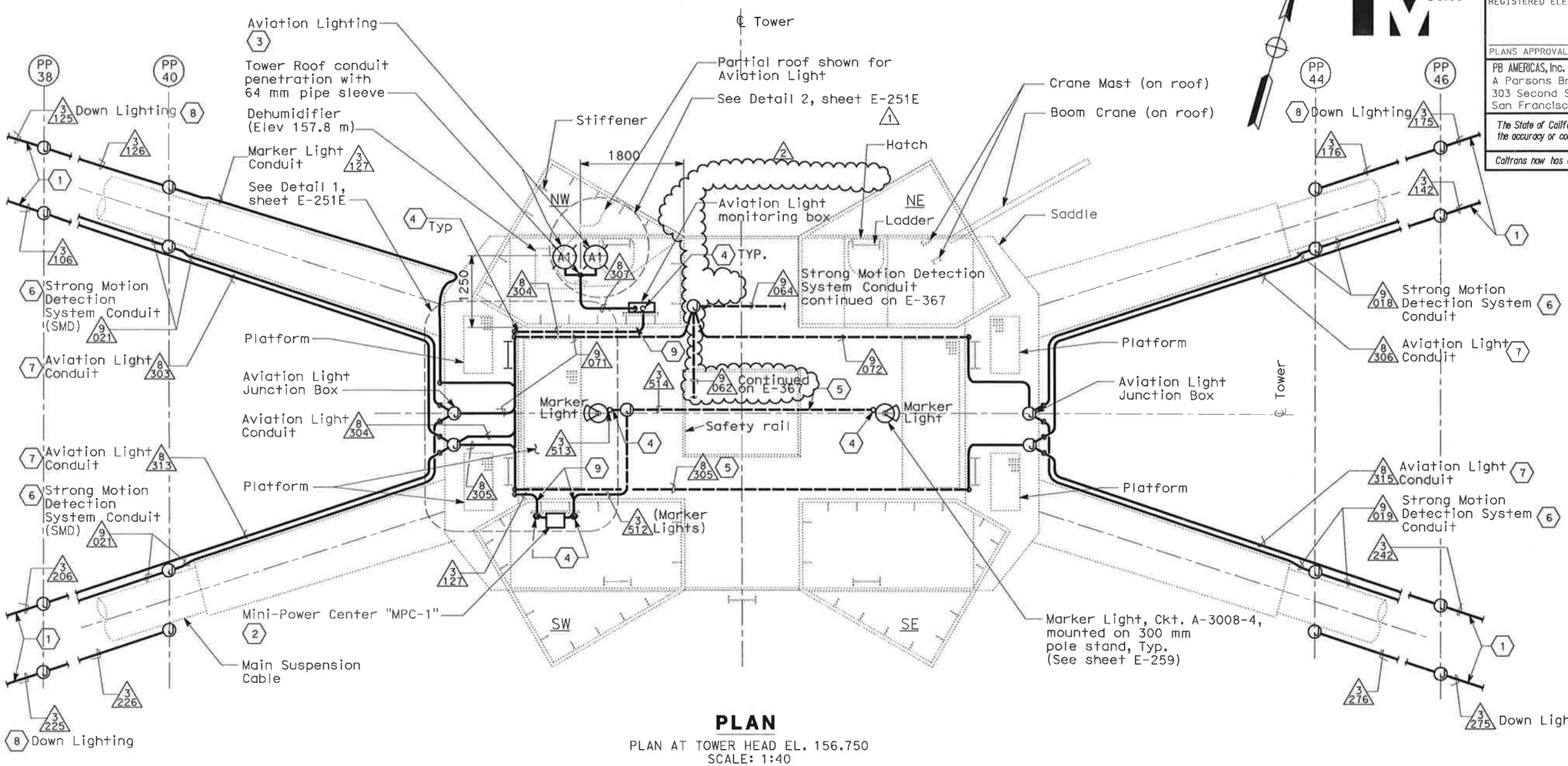

PLAN

PLAN AT TOWER HEAD EL. 156.750
SCALE: 1:40

REGISTERED PROFESSIONAL ENGINEER SYN YEE CHIN No. 18186 Exp. 09/30/2011 ELECTRICAL STATE OF CALIFORNIA

Syn Yee Chin

FOR REVISION ONLY 1 2

SHEET NOTES:

1. The Liquidtight Flexible Metal Conduit shall be clamped to the Main Cable messenger cables at 610 mm intervals. Do not exceed four 90 degree bends between conduit pull boxes.
2. Mini-Power Center "MPC-1", 3kVA, 480-120/240V, 1-ph with main breaker, type EP transformer and secondary distribution panel mounted on structural strut in SW Tower and bolted to stiffeners (See Details 1 & 4, sheet E-251E)
3. Aviation Lighting on top: Red Flashing Beacon Type AV-1, CKT. S-3056-7, mounted on 762 mm pole stand anchored to the steel surface with stud bolts and neoprene gaskets. (See Details 2, 3, 6 thru 9, sheet E-251E)
4. Tower Head Diaphragm conduit penetration.
5. Conduit located under Tower Head Diaphragm Plate and supported from structural strut bolted to Diaphragm stiffeners, Typ (See Detail 5, sheet E-251E)
6. For continuation of strong motion detection conduits along main suspension cable, see sheet E-365
7. For continuation of navigation and aviation systems conduits along main suspension cable, see sheets E-226 thru E-229 and E-291.
8. For continuation of down lighting conduits along main suspension cable, see sheets E-226 thru E-229.
9. Tower skin plate "A" conduit penetrations.

NOTES:

1. For conduit and cable information, see sheets E-422 through E-426, E-446 and E-446A.

REQUEST FOR INFORMATION NOT ADDRESSED IN THIS CCO REMAIN IN FORCE

MARK	DATE	DESCRIPTIONS	BY	CH'D	CCO#
2	09/02/11	TOWER SUSPENDER CABLE & ELEVATOR	RM	TW	203S1
1	01/07/11	CABLE ELECTRICAL-LED AVIATION LIGHTS	RR	RG	72S1
0	09/24/08	CABLE ELECTRICAL	RR AG	RG SE	72

REVISIONS

CONTRACT CHANGE ORDER NO. _____
SHEET _____ OF _____

DETAIL
TOWER AND SUSPENSION CABLE TOWER HEAD CABLE LIGHTING

SCALE AS SHOWN

E-251D

THIS PLAN ACCURATE FOR ELECTRICAL WORK ONLY.

ALL DIMENSIONS ARE IN MILLIMETERS UNLESS OTHERWISE SHOWN

FOR REDUCED PLANS ORIGINAL 0 20 40 60 80

DGN FILE =>T:\13103\MS\pse\SAS Struc\CCO\SAS CCO203S1\04-0120f1 0261S04R02.dgn

DATE PLOTTED => 9/1/2011

LAST REVISION

STATE OF CALIFORNIA - DEPARTMENT OF TRANSPORTATION

Caltrans

DESIGN OVERSIGHT BEHZAD GOLEMOHAMMADI

CALCULATED/DESIGNED BY CHECKED BY

DATE REVISED BY DATE REVISED

DIST	COUNTY	ROUTE	KILOMETER POST TOTAL PROJECT	SHEET No	TOTAL SHEETS
04	SF	80	13.2/13.9	289 R3	1204

REGISTERED ELECTRICAL ENGINEER 12/19/02 DATE

12-6-04
PLANS APPROVAL DATE

REGISTERED PROFESSIONAL ENGINEER JENS ERLINGSSON No. 8249 Exp. 9/30/06 ELECTRICAL STATE OF CALIFORNIA

PB POWER, Inc.
A Parsons Brinckerhoff Company
303 Second St., Suite 700N
San Francisco, CA 94107-1317

The State of California or its officers or agents shall not be responsible for the accuracy or completeness of electronic copies of this plan sheet.

Caltrans now has a web site! To get to the web site, go to http://www.dot.ca.gov

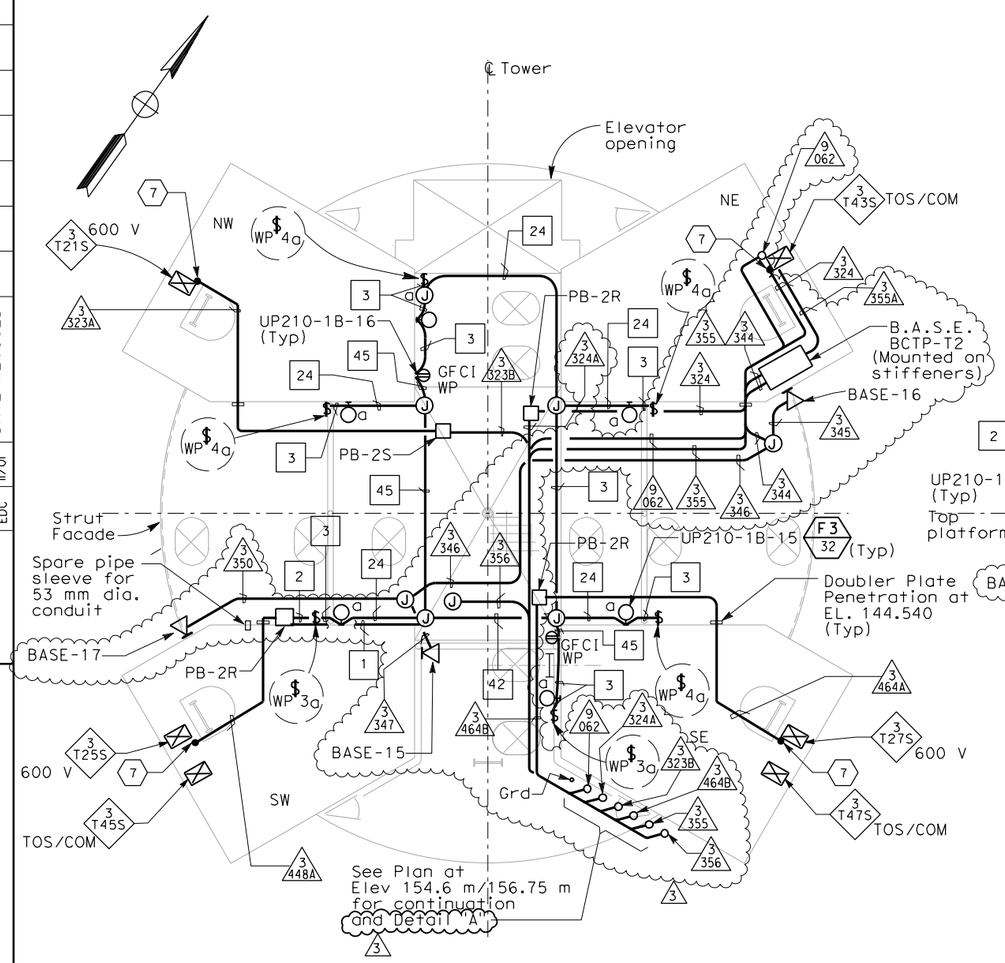

PLAN AT ELEVATION 139.85 m

SCALE: 1:40

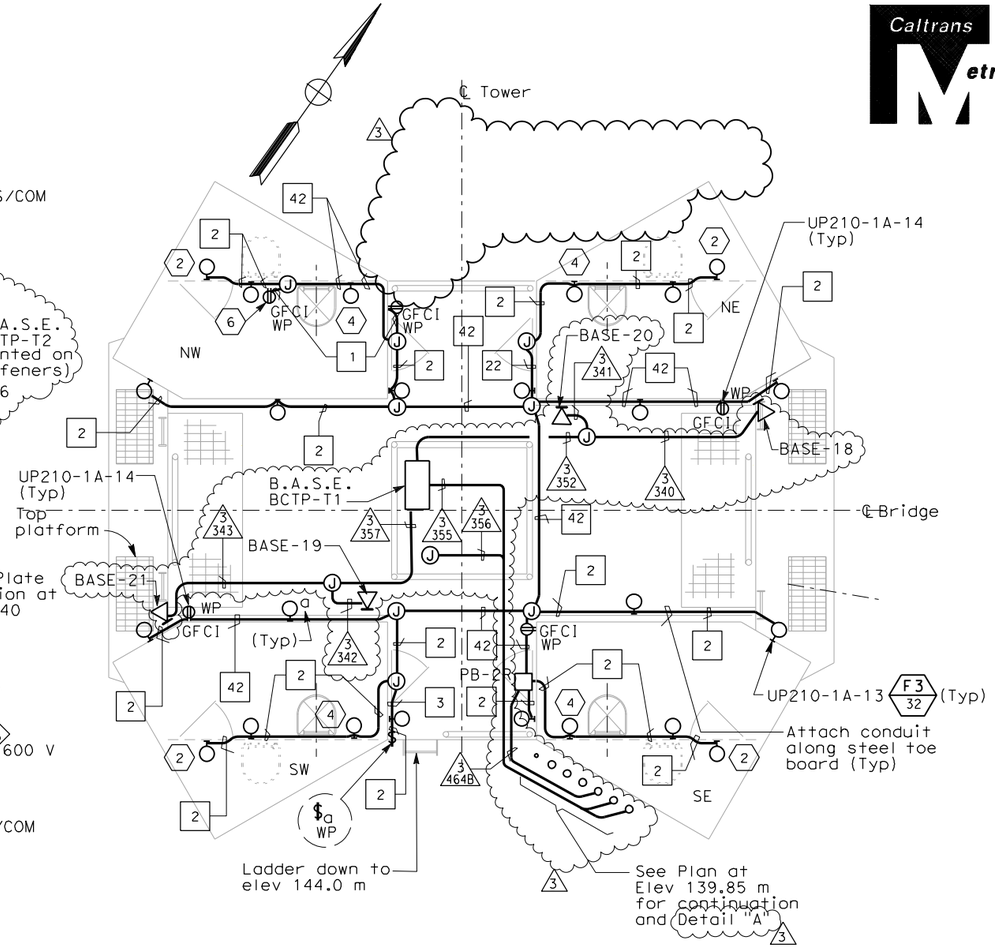

PLAN AT ELEVATIONS 154.6 m TO 156.75 m

SCALE: 1:40

SHEET NOTES:

1. Deleted.
2. Fixture mounting height elevation shall be 158.5 m.
3. Deleted.
4. Fixture mounting height elevation shall be 159.25 m.
5. Deleted
6. Receptacle mounting height elevation shall be 158.450 m.
7. Conduit down to cable tray located below EL. 143.00 diaphragm.

NOTES:

1. References:
   - For utility panels UP210-1A and UP210-1B, panel schedules see sheets E-279 and E-280.
   - For types of pull boxes, splice boxes and enclosures, see sheets E-83 and E-169.
   - For conduit and cable tray schedules, see sheets starting at E-401.
   - For lighting installation details, see sheet E-267.
   - For lighting fixture schedule, see sheet E-263.
   - Deleted.
   - For typical conduit installation details, see sheet E-268.
2. All conduits and fittings routed exposed at grating shall be rigid galvanized steel, PVC coated.
3. Fixture mounting height shall be 2.125 m above floor/platform elevation UNO.
4. Electrical conduits shall enter the tower shafts between stiffeners A3 and A4 only. For conduit entry details, see Structural Utility drawings.
5. For other related work not shown on this sheet, see Electrical Special Provisions.
6. The contractor shall install pull box/JB(s) along conduit runs to limit bends to be three (3) 90 degrees or fewer.

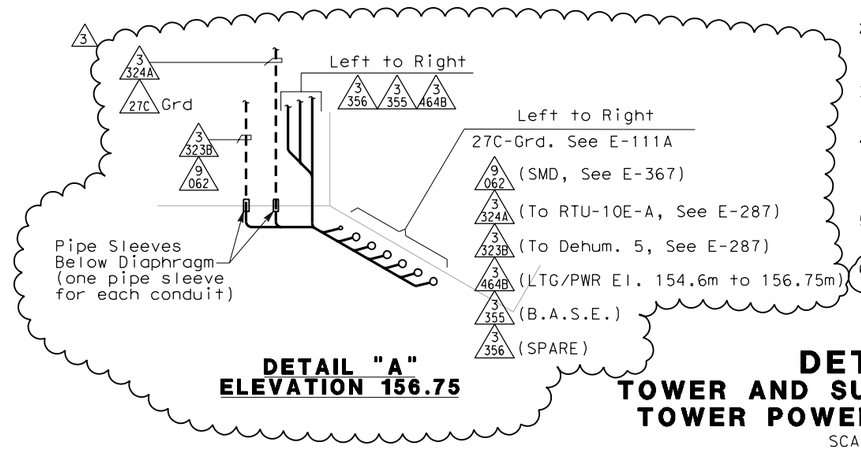

DETAIL "A" ELEVATION 156.75

DETAILS
TOWER AND SUSPENSION CABLE
TOWER POWER AND LIGHTING

SCALE 1:50

REGISTERED PROFESSIONAL ENGINEER SYN YEE CHIN No. 18186 Exp. 09/30/2011 ELECTRICAL STATE OF CALIFORNIA

FOR REVISION ONLY 3

REGISTERED PROFESSIONAL ENGINEER MAXWELL FUMIO TAKAKI No. E 8651 Exp. 9/30/2008 ELECTRICAL STATE OF CALIFORNIA

FOR REVISION ONLY 1

REGISTERED PROFESSIONAL ENGINEER FADI WALIEDDINE No. 11465 Exp. 12/31/2009 ELECTRICAL STATE OF CALIFORNIA

FOR REVISION ONLY 2

REQUEST FOR INFORMATION NOT ADDRESSED IN THIS CCO REMAIN IN FORCE

MARK	DATE	DESCRIPTIONS	BY	CH'D	CCO#
3	09/02/11	TOWER SUSPENDER CABLE & ELEVATOR	RM	TW	203S1
2	12/11/09	TOWER UTILITY PANELS	SYC RG	FW	70
1	02/19/08	ELECTRICAL MODIFICATIONS	MP EL	RR	42

REVISIONS

CONTRACT CHANGE ORDER NO._____
SHEET _____ OF _____

THIS PLAN ACCURATE FOR ELECTRICAL WORK ONLY.

ALL DIMENSIONS ARE IN MILLIMETERS UNLESS OTHERWISE SHOWN

DATE	REVISED BY	DATE	REVISED BY
10/01	FK	11/01	EDC

CALCULATED/DESIGNED BY — CHECKED BY

DESIGN OVERSIGHT — BEHZAD GOLEMOHAMMADI

STATE OF CALIFORNIA - DEPARTMENT OF TRANSPORTATION — Caltrans

LAST REVISION 00-00-00 — DATE PLOTTED => 9/2/2011 — TIME PLOTTED => 7:04:14 AM

E-286

FOR REDUCED PLANS ORIGINAL SCALE IS IN MILLIMETERS 0 20 40 60 80

DGN FILE =>04-0120f1_0289R03.dgn
USERNAME =>refuerzo

CU 04251 — EA 0120F1

DIST	COUNTY	ROUTE	KILOMETER POST TOTAL PROJECT	SHEET No	TOTAL SHEETS
04	SF	80	13.2/13.9	290R4	1204

Caltrans Metric

REGISTERED ELECTRICAL ENGINEER 12/19/02 DATE

12-6-04
PLANS APPROVAL DATE

PB POWER, Inc.
A Parsons Brinckerhoff Company
303 Second St., Suite 700N
San Francisco, CA 94107-1317

REGISTERED PROFESSIONAL ENGINEER JENS ERLINGSSON No. 8249 Exp. 9/30/06 ELECTRICAL STATE OF CALIFORNIA

The State of California or its officers or agents shall not be responsible for the accuracy or completeness of electronic copies of this plan sheet.

Caltrans now has a web site! To get to the web site, go to http://www.dot.ca.gov

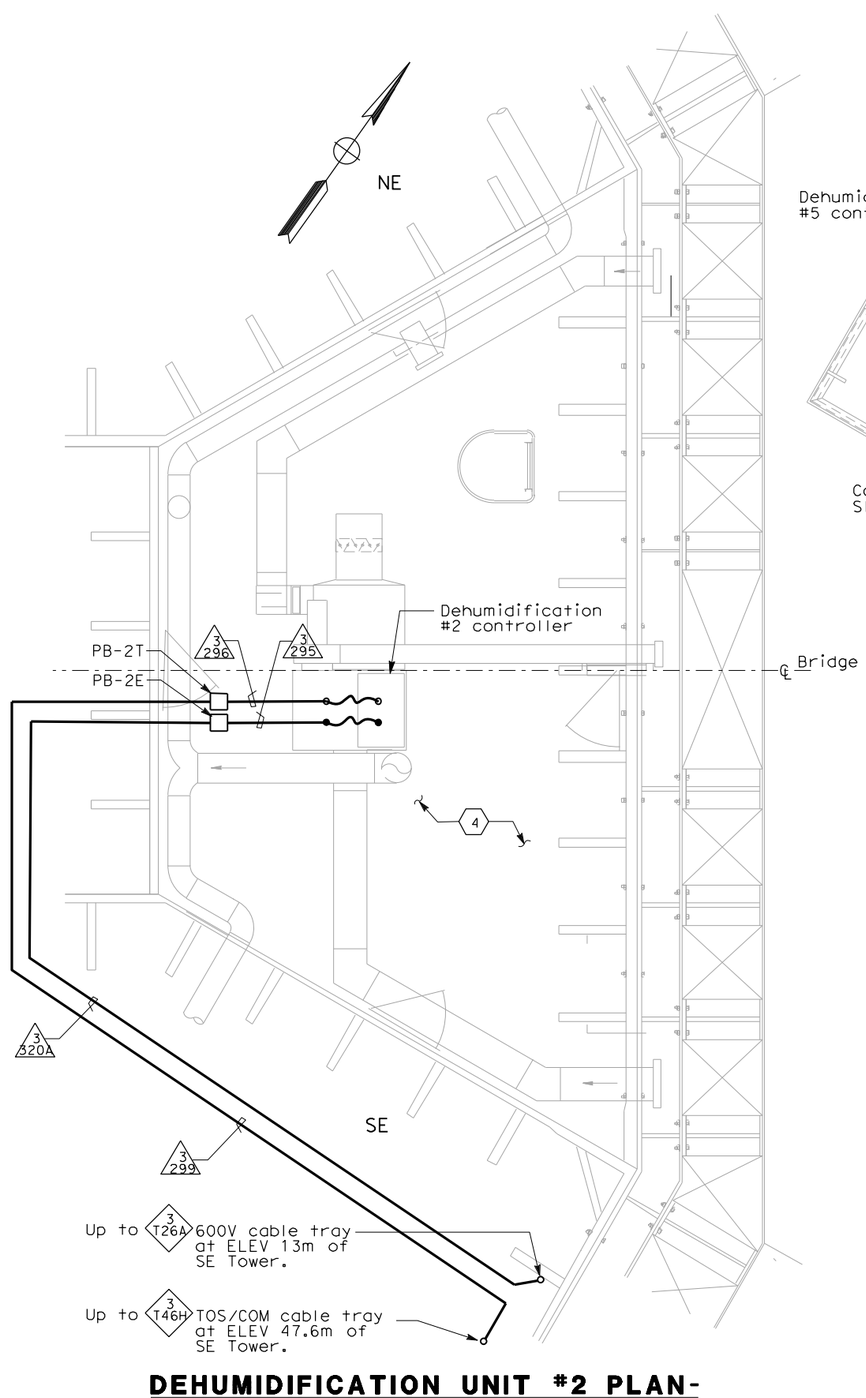

DEHUMIDIFICATION UNIT #2 PLAN- AT ELEV. 9.0 m

NO SCALE

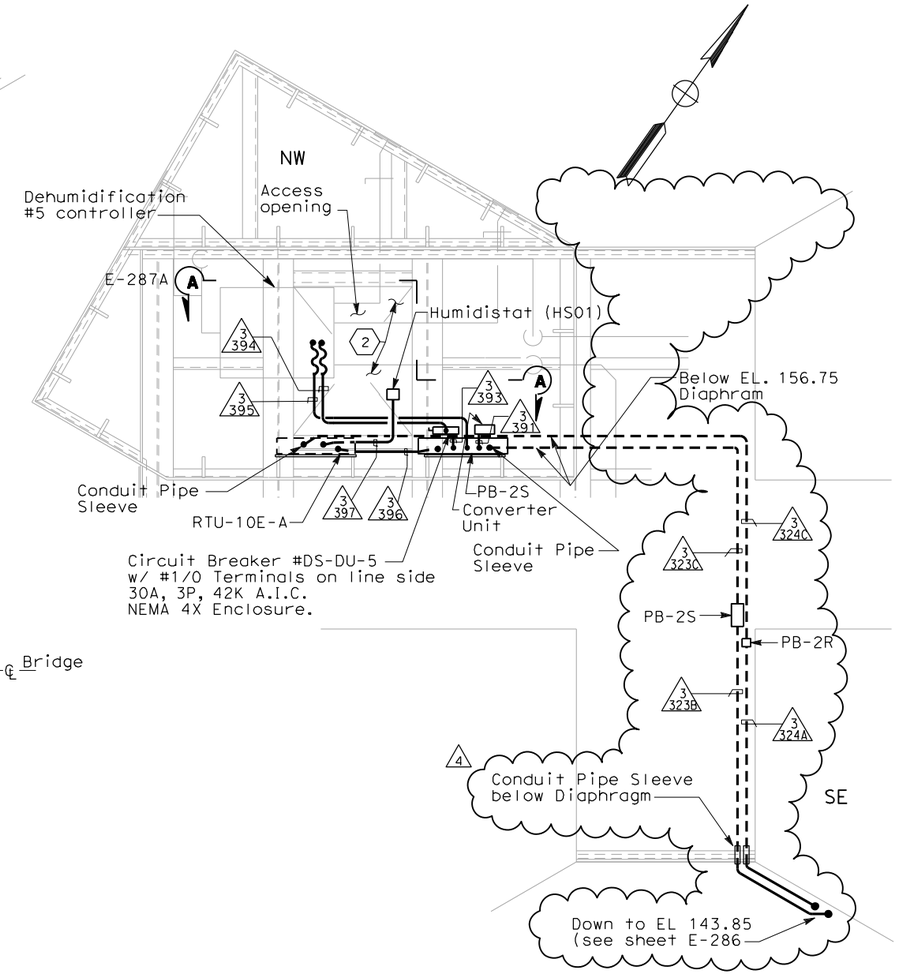

DEHUMIDIFICATION UNIT #5 PLAN AT ELEV. 158.0 m

SCALE: 1:20

SHEET NOTES:

1. Deleted.
2. For lighting and receptacles in this area, see plan at elevations 154.6 m to 156.75 m on sheet E-268.
3. Deleted.
4. For lighting and receptacles in this area, see sheet E-266.

NOTES:

1. References:
   - For types of pull boxes, splice boxes and enclosures, see sheets E-83 and E-169.
   - For conduit and cable tray schedules, see sheets starting at E-401.
   - For typical conduit installation details, see sheet E-268.
2. For other related work not shown on this sheet, see Electrical Special Provisions.
3. 4 The contractor shall install pull box/JB(s) along conduit runs to limit bends to be three (3) 90 degrees or fewer.

REGISTERED PROFESSIONAL ENGINEER MAXWELL FUMIO TAKAKI No. E 8651 Exp. 9/30/2008 ELECTRICAL STATE OF CALIFORNIA

FOR REVISION ONLY 1

REGISTERED PROFESSIONAL ENGINEER FADI WALIEDDINE No. 11465 Exp. 12/31/2009 ELECTRICAL STATE OF CALIFORNIA

FOR REVISION ONLY 2

REGISTERED PROFESSIONAL ENGINEER SYN YEE CHIN No. 18186 Exp. 09/30/2011 ELECTRICAL STATE OF CALIFORNIA

FOR REVISION ONLY 3 4

REQUEST FOR INFORMATION NOT ADDRESSED IN THIS CCO REMAIN IN FORCE

MARK	DATE	DESCRIPTIONS	BY	CH'D	CCO#
4	09/02/11	TOWER SUSPENDER CABLE & ELEVATOR	RM	TW	203S1
3	03/26/10	DEHUMIDIFIER SCADA INTERFACE	RR RG	RG FW	130
2	09/18/09	TOWER UTILITY PANELS	SYC RG	FW	70
1	02/19/08	ELECTRICAL MODIFICATIONS	MP EL	RR	42

REVISIONS

CONTRACT CHANGE ORDER NO._____
SHEET _____ OF _____

DETAILS
TOWER AND SUSPENSION CABLE TOWER POWER AND LIGHTING

SCALE: AS NOTED

E-287

THIS PLAN ACCURATE FOR ELECTRICAL WORK ONLY.

ALL DIMENSIONS ARE IN MILLIMETERS UNLESS OTHERWISE SHOWN

STATE OF CALIFORNIA - DEPARTMENT OF TRANSPORTATION
Caltrans

DESIGN OVERSIGHT: BEHZAD GOLEMOHAMMADI
CALCULATED/DESIGNED BY: FK | DATE: 10/01 | REVISED BY
CHECKED BY: EDC | 11/01 | DATE REVISED

FOR REDUCED PLANS ORIGINAL SCALE IS IN MILLIMETERS 0 20 40 60 80

DGN FILE =>04-0120f1_0290R04.dgn
USERNAME =>fusco

CU 04251 | EA 0120F1

LAST REVISION 00-00-00
DATE PLOTTED => 8/31/2011
TIME PLOTTED => 3:45:55 PM

DIST	COUNTY	ROUTE	KILOMETER POST TOTAL PROJECT	SHEET No	TOTAL SHEETS
04	SF	80	13.2/13.9	335 R3	1204

REGISTERED ELECTRICAL ENGINEER 12/19/02 DATE

12-6-04
PLANS APPROVAL DATE

PB POWER, Inc.
A Parsons Brinckerhoff Company
303 Second St., Suite 700N
San Francisco, CA 94107-1317

REGISTERED PROFESSIONAL ENGINEER JENS ERLINGSSON No. 8249 Exp. 9/30/06 ELECTRICAL STATE OF CALIFORNIA

The State of California or its officers or agents shall not be responsible for the accuracy or completeness of electronic copies of this plan sheet.

Caltrans now has a web site! To get to the web site, go to: http://www.dot.ca.gov

REGISTERED PROFESSIONAL ENGINEER SYN YEE CHIN No. 18186 Exp. 09/30/2011 ELECTRICAL STATE OF CALIFORNIA
FOR REVISION ONLY 3

REGISTERED PROFESSIONAL ENGINEER FADI WALIEDDINE No. 11465 Exp. 12/31/2009 ELECTRICAL STATE OF CALIFORNIA
FOR REVISION ONLY 2

Caltrans Metric

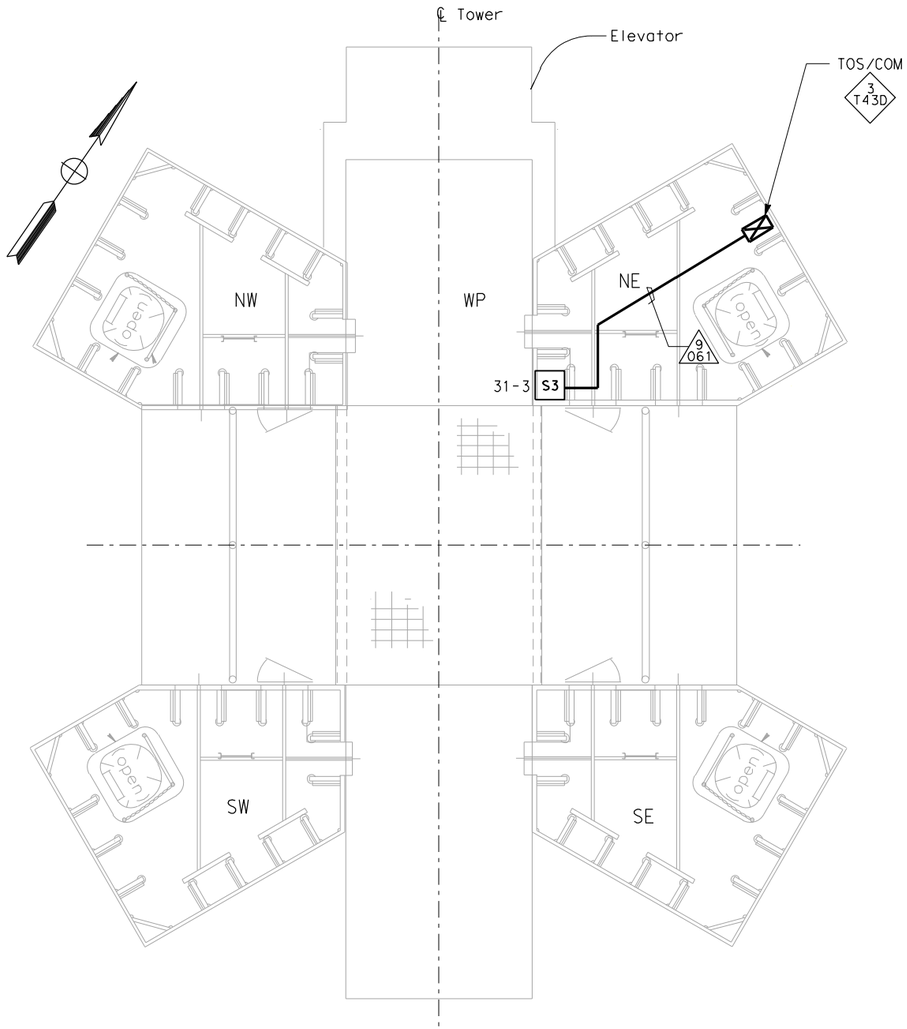

TOWER PLATFORM CONDUIT AND SENSOR LAYOUT
ELEV 93.350 m
SCALE 1:40

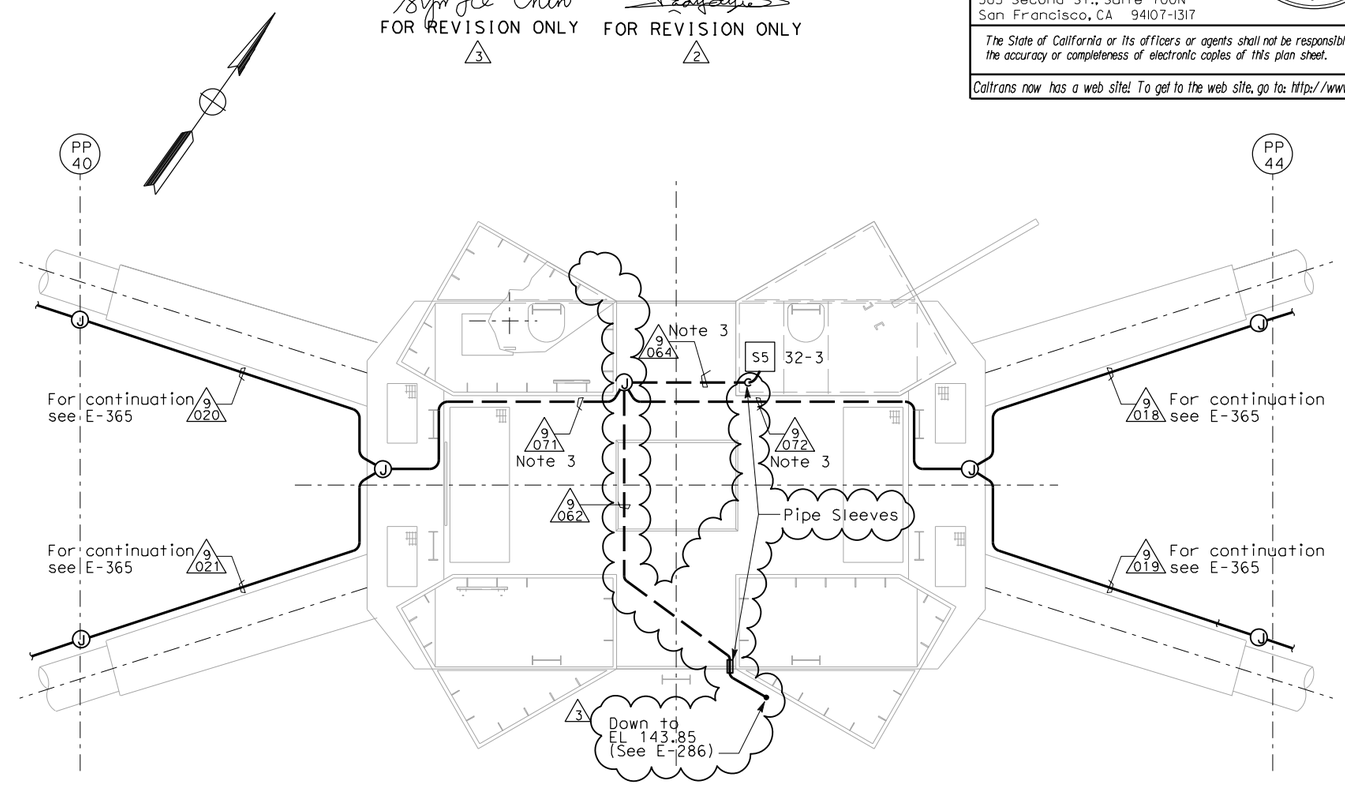

DETAIL 1
TOWER PLATFORM CONDUIT AND SENSOR LAYOUT
ELEV 156.75 M
SCALE 1:50

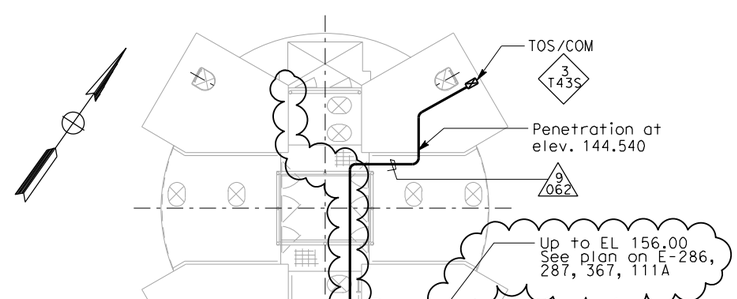

TOWER PLATFORM CONDUIT AND SENSOR LAYOUT
ELEV 143.85 M
NO SCALE

NOTES:

1. For other related work not shown on this drawing, see Electrical Special Provisions.
2. References:
   - For nameplates, sensor enclosures and recorder schedules, see sheets E-379, E-380 and E-381.
   - For cable block diagram, see sheets E-382, E-383 and E-384.
   - For general notes of the strong motion detection system, see sheet E-361.
   - For circuit and conduit/cable tray schedules, see sheets starting at E-401.
3. Conduits located under tower head diaphragm plate and supported from structural strut bolted to diaphragm stiffeners.
4. For additional detail at tower head see E-251D.
5. The contractor shall install pull box/JB(s) along conduit runs to limit bends to be three (3) 90 degrees. (3)

STRONG MOTION DETECTION SYSTEM
SAS SUPERSTRUCTURE
TOWER PLATFORM CONDUIT AND SENSOR LOCATION
SCALE AS NOTED

REQUEST FOR INFORMATION NOT ADDRESSED IN THIS CCO REMAIN IN FORCE

MARK	DATE	DESCRIPTIONS	BY	CH'D	CCO#
3	09/02/11	TOWER SUSPENDER CABLE & ELEVATOR	RM	TW	203S1
2	10/03/08	STRONG MOTION SYSTEM	RG	FW	74
1	02/19/08	ELECTRICAL MODIFICATIONS	MP EL	RR	42

REVISIONS

CONTRACT CHANGE ORDER NO._____
SHEET _____ OF _____

THIS PLAN ACCURATE FOR ELECTRICAL WORK ONLY.

ALL DIMENSIONS ARE IN MILLIMETERS UNLESS OTHERWISE SHOWN.

E-367

STATE OF CALIFORNIA - DEPARTMENT OF TRANSPORTATION
Caltrans

DESIGN OVERSIGHT
BEHZAD GOLEMOHAMMADI

	DATE	REVISED BY	DATE REVISED
CALCULATED/DESIGNED BY	FK	10/01	
CHECKED BY	EDC	11/01	

LAST REVISION 00-00-00
DATE PLOTTED => 8/31/2011
TIME PLOTTED => 3:46:15 PM

FOR REDUCED PLANS ORIGINAL SCALE IS IN MILLIMETERS 0 20 40 60 80

DGN FILE =>04-0120f1_0335R03.dgn
USERNAME =>fusco

CU 04251 EA 0120F1

DIST	COUNTY	ROUTE	KILOMETER POST TOTAL PROJECT	SHEET No	TOTAL SHEETS
04	SF	80	13.2/13.9	383 R5	1204

Jens Erlingsson 12/19/02
REGISTERED ELECTRICAL ENGINEER DATE

12-6-04
PLANS APPROVAL DATE

REGISTERED PROFESSIONAL ENGINEER JENS ERLINGSSON No. 8249 Exp. 9/30/06 ELECTRICAL STATE OF CALIFORNIA

PB POWER, Inc.
A Parsons Brinckerhoff Company
303 Second St., Suite 700N
San Francisco, CA 94107-1317

The State of California or its officers or agents shall not be responsible for the accuracy or completeness of electronic copies of this plan sheet.

Caltrans now has a web site! To get to the web site, go to http://www.dot.ca.gov

Caltrans Metric

REQUEST FOR INFORMATION NOT ADDRESSED IN THIS CCO REMAIN IN FORCE

MARK	DATE	DESCRIPTIONS	BY	CH'D	CCO#
5	09/02/11	TOWER SUSPENDER CABLE & ELEVATOR	TW	RM	203S1
4	07/01/11	TOS MODIFICATIONS	RR	RG	81
3	03/26/10	DEHUMIDIFIER SCADA INTERFACE	TW	RG SYC	130
2	09/18/09	TOWER UTILITY PANELS	JS TW	RG FW	70
1	02/19/08	ELECTRICAL MODIFICATIONS	MP EL	RR	42

REVISIONS

CONTRACT CHANGE ORDER NO._____
SHEET_____ OF_____

REGISTERED PROFESSIONAL ENGINEER SYN YEE CHIN No. 18186 Exp. 09/30/2011 ELECTRICAL STATE OF CALIFORNIA
Syn Yee Chin
FOR REVISION ONLY 3 4 5

REGISTERED PROFESSIONAL ENGINEER FADI WALIEDDINE No. 11465 Exp. 12/31/2009 ELECTRICAL STATE OF CALIFORNIA
FOR REVISION ONLY 2

REGISTERED PROFESSIONAL ENGINEER MANNELL FUMIO TAKAKI No. E 8651 Exp. 9/30/2008 ELECTRICAL STATE OF CALIFORNIA
FOR REVISION ONLY 1

CONDUIT DATA

Conduit No.	Reference	Size	Type	Total Fill (mm2)	Allowable Fill (mm2)	Included Cable No.	Conductor Type
3339	E-264, E-264A	53	RGS-PVC coated conduit	754.18	879.42	2125	1-3/C +gnd #1/0, 600 V,EPR insulation
3340	E-286	27	RGS-PVC coated conduit		229.03	Pull rope	Soft-Fiber Polyester
3341	E-286	27	RGS-PVC coated conduit		229.03	Pull rope	Soft-Fiber Polyester
3342	E-286	27	RGS-PVC coated conduit		229.03	Pull rope	Soft-Fiber Polyester
3343	E-286	27	RGS-PVC coated conduit		229.03	Pull rope	Soft-Fiber Polyester
3344	E-286	41	RGS-PVC coated conduit		534.55	Pull rope	Soft-Fiber Polyester
3345	E-286	27	RGS-PVC coated conduit		229.03	Pull rope	Soft-Fiber Polyester
3346	E-286	27	RGS-PVC coated conduit		229.03	Pull rope	Soft-Fiber Polyester
3347	E-286	27	RGS-PVC coated conduit		229.03	Pull rope	Soft-Fiber Polyester
3348	E-264A, E-281	41	RGS-PVC coated conduit	300.88	534.55	MVDSE02A	MVDS DLC
						MVDSW03A	MVDS DLC
3348C	E-345, E-281	27	RGS-PVC coated conduit	150.44	229.03	MVDSE02A	MVDS DLC
3348D	E-345, E-281	27	RGS-PVC coated conduit	150.44	229.03	MVDSW03A	MVDS DLC
3349	E-264A, E-281	41	RGS-PVC coated conduit	176.6	534.55	CCTVE01B	HCC
						2120-1	1-2PR #18 Twisted Shielded w/ overall shield
3349C	E-281	41	RGS-PVC coated conduit	78.5	534.55	CCTVE01B	HCC
3350	E-286	27	RGS-PVC coated conduit		229.03	Pull rope	Soft-Fiber Polyester
3351A	E-264	53	RGS-PVC coated conduit	527.18	879.42	Pull rope	Soft-Fiber Polyester
						2123-3	1-3C#2 + gnd, 600 V, EPR insulation
3352	E-286	27	RGS-PVC coated conduit		229.03	Pull rope	Soft-Fiber Polyester
3353	E285B	53	RGS-PVC coated conduit	306.56	879.42	Pull Rope	Soft-Fiber Polyester
						UP210-1B-13 & 14	4-#10+gnd, 600V, RHH/RHW insulation
						UP210-1B-5	1-2C#12 + gnd, 600V, EPR insulation
						UP210-1A-5	1-2C#12 + gnd, 600V, EPR insulation
3354	E285B	53	RGS conduit	491.22	879.42	Pull Rope	Soft-Fiber Polyester
						UP210-1B-5	1-2C#12 + gnd, 600V, EPR insulation
						UP210-1A-5	1-2C#12 + gnd, 600V, EPR insulation
						UP210-1B-1 & 6	1-4C#8 + gnd, 600V, EPR insulation

CONDUIT DATA

Conduit No.	Reference	Size	Type	Total Fill (mm2)	Allowable Fill (mm2)	Included Cable No.	Conductor Type
3355	E-286	41	RGS-PVC coated conduit	0.00	534.55	Pull Rope	Soft-Fiber Polyester
3355A	E-286	53	RGS-PVC coated conduit	0.00	879.42	Pull Rope	Soft-Fiber Polyester
3356	E-286	53	RGS-PVC coated conduit	0.00	879.42	Pull Rope	Soft-Fiber Polyester
3357	E-286	27	RGS-PVC coated conduit	0.00	229.03	Pull rope	Soft-Fiber Polyester
3358	E-286	27	RGS-PVC coated conduit	0.00	229.03	Pull rope	
3359	E-264A,E-281	41	RGS-PVC coated conduit	78.5	534.55	CCTVE01A	HCC
3359C	E-281	41	RGS-PVC coated conduit	78.5	534.55	CCTVE01A	HCC
3364	E-285B	53	RGS-PVC coated conduit	205.22	879.42	Pull Rope	Soft-Fiber Polyester
						UP210-1A-5	1-2C#12 + gnd, 600V, EPR insulation
						UP210-1B-5	1-2C#12 + gnd, 600V, EPR insulation

For continuation, see next sheet.

CONDUIT AND TRAY SCHEDULE

E-428

DATE	REVISED BY	DATE	REVISED
PBP	AB	8/02	8/02

CALCULATED/DESIGNED BY — CHECKED BY

DESIGN OVERSIGHT — BEHZAD GOLEMOHAMMADI

STATE OF CALIFORNIA - DEPARTMENT OF TRANSPORTATION
Caltrans

LAST REVISION 00-00-00 — DATE PLOTTED => 9/2/2011 TIME PLOTTED => 10:01:32 AM

0 20 40 60 80

DGN FILE =>04-0120f1_0383R05.dgn
USERNAME =>refuerzo

CU 04251 | EA 0120F1