DIST.	COUNTY	ROUTE	KILOMETER POST TOTAL PROJECT	SHEET NO.	TOTAL SHEETS
04	SF	80	13.2/13.9	940S8	1204

REGISTERED ENGINEER - CIVIL

09-21-11
PLANS APPROVAL DATE

REGISTERED PROFESSIONAL ENGINEER Marwan N. Nader No. C 054426 Exp. 12/31/11 CIVIL STATE OF CALIFORNIA

The State of California or its officers or agents shall not be responsible for the accuracy or completeness of electronic copies of this plan sheet.

T.Y. LIN / MOFFATT & NICHOL
825 BATTERY STREET
SAN FRANCISCO, CA 94111

Caltrans now has a web site! To get to the web site, go to: http://www.dot.ca.gov

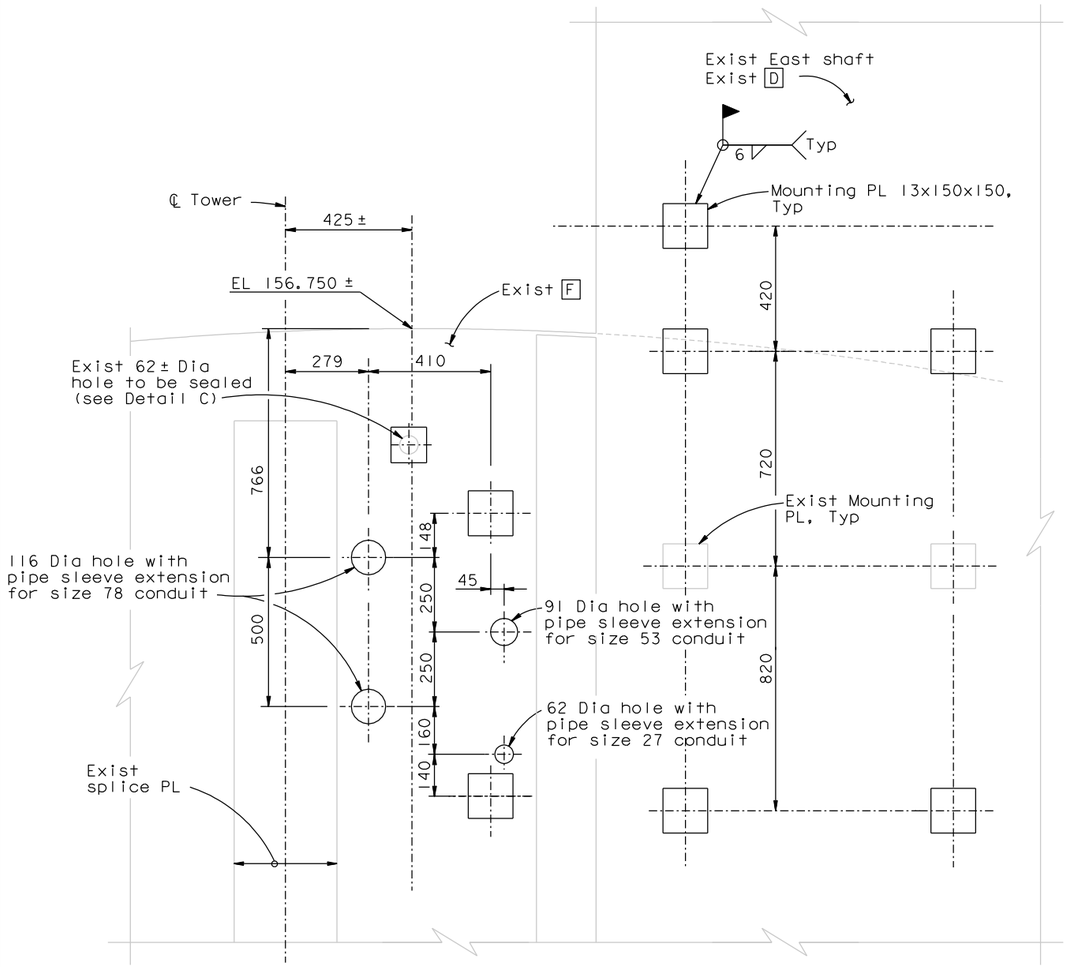

VIEW B-B (Not all details shown for clarity)
1:10

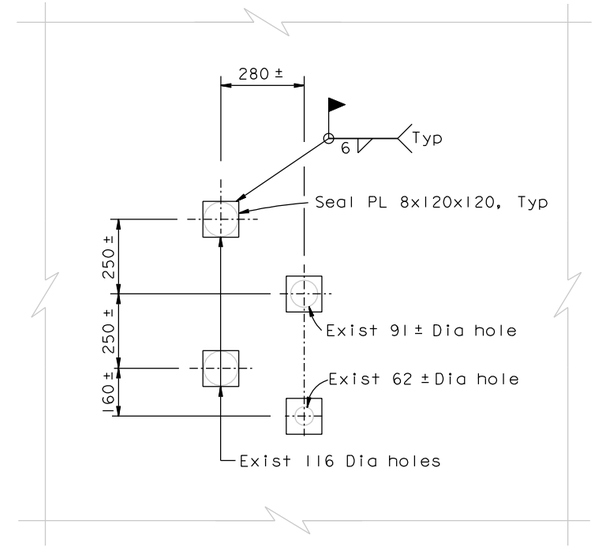

DETAIL C
1:10

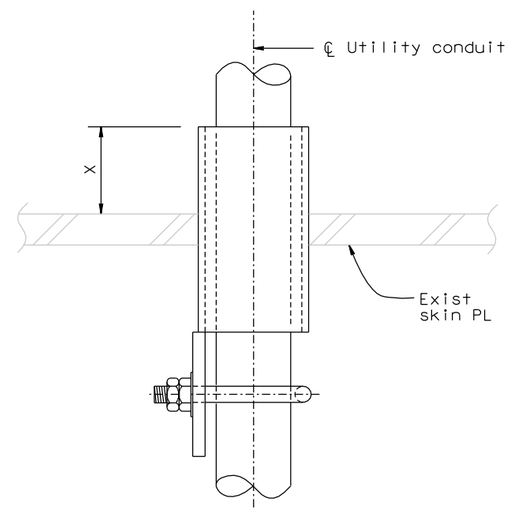

PIPE SLEEVE EXTENSION (See Note 1)
1:2.5

PIPE SLEEVE EXTENSION	
Conduit Nominal size	Dimension "X", mm
27	64
53	55
78	48

NOTES:

1. For pipe sleeve details not shown, see "Utility Details No.1" sheet.

CONTRACT CHANGE ORDER NO. ____
SHEET ____ OF ____

REQUESTS FOR INFORMATION NOT ADDRESSED IN THIS CCO REMAIN IN FORCE

ALL DIMENSIONS ARE IN MILLIMETERS UNLESS OTHERWISE SHOWN

R. Valizadeh/V. Toan/Y.L./W.L./F.C.
DESIGN OVERSIGHT
Reza Valizadeh / Vong P. Toan / Y. Liu
SIGN OFF DATE 09/21/11

MARK	DATE	DESCRIPTIONS	BY	CH'D	CCO#
0	09/21/11	TOWER SUSPENDER CABLE & ELEVATOR	NV	MN	203S1

REVISIONS

DESIGN	BY N. Vo	CHECKED M. Nader	
DETAILS	BY N. Vo	CHECKED M. Nader	
QUANTITIES	BY N. Vo	CHECKED M. Nader	

PREPARED FOR THE STATE OF CALIFORNIA DEPARTMENT OF TRANSPORTATION

R. Manzanarez
PROJECT ENGINEER

BRIDGE NO. 34-0006L/R
KILOMETER POST 13.2/13.9

SAN FRANCISCO OAKLAND BAY BRIDGE
EAST SPAN SEISMIC SAFETY PROJECT
SELF-ANCHORED SUSPENSION BRIDGE
(SUPERSTRUCTURE & TOWER)

TOWER ELEVATOR EXTENSION DETAILS NO. 4

Rev. Date: 5-18-98

ORIGINAL SCALE IN MILLIMETERS FOR REDUCED PLANS 0 10 20 30 40 50 60 70 80 90 100

CU 04
EA 0120F1

DISREGARD PRINTS BEARING EARLIER REVISION DATES 09/21/11

REVISION DATES (PRELIMINARY STAGE ONLY)

SHEET 523S8 OF

FILE => I:\bb\04-01200\sas\contract plans and cco\cco\cco#203s1\2-update 09-21-11\dgn\akelell.dgn

100 % PS&E

USERNAME => DWinrow DATE PLOTTED => 21 SEP 2011 TIME PLOTTED => 12:24:21