DIST	COUNTY	ROUTE	KILOMETER POST TOTAL PROJECT	SHEET No.	TOTAL SHEETS
04	SF	80	13.2/13.9	165 S1R1	1204

REGISTERED ELECTRICAL ENGINEER — 8/11/08 DATE

PLANS APPROVAL DATE

REGISTERED PROFESSIONAL ENGINEER — FADI WALIEDDINE No. 11465 Exp. 12/31/2009 ELECTRICAL — STATE OF CALIFORNIA

PB AMERICAS, Inc.
A Parsons Brinckerhoff Company
303 Second St., Suite 700N
San Francisco, CA 94107-1317

The State of California or its officers or agents shall not be responsible for the accuracy or completeness of electronic copies of this plan sheet.

Caltrans now has a web site! To get to the web site, go to http://www.dot.ca.gov

Caltrans Metric

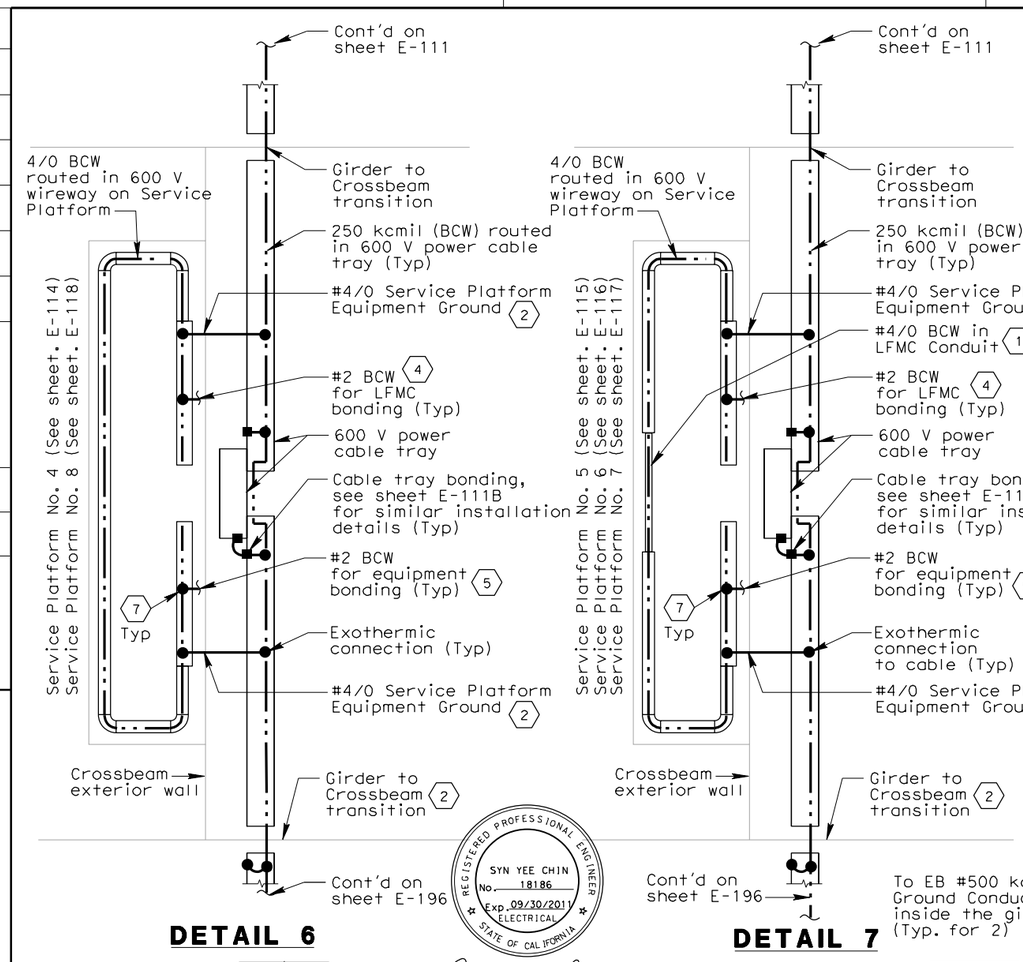

DETAIL 6

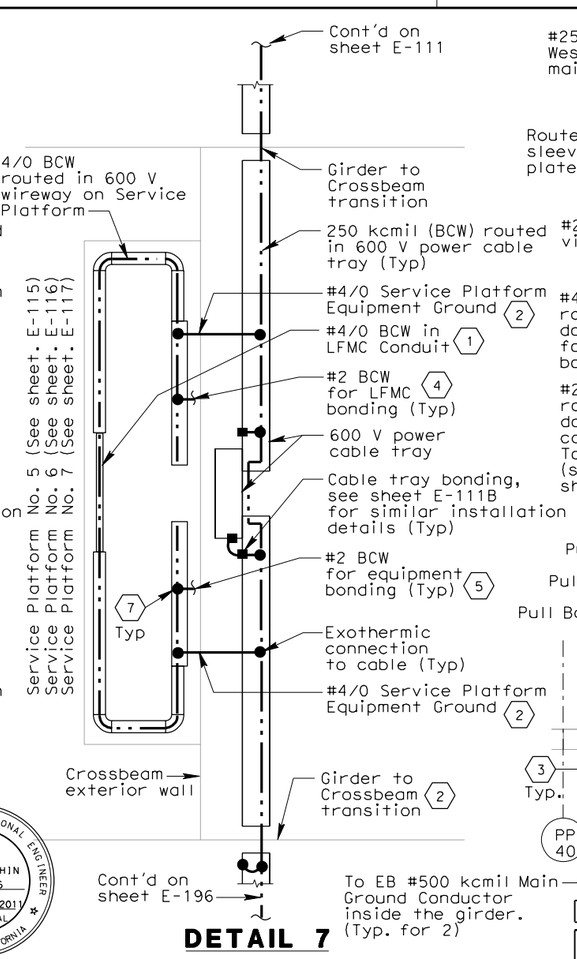

DETAIL 7

REGISTERED PROFESSIONAL ENGINEER — SYN YEE CHIN No. 18186 Exp. 09/30/2011 ELECTRICAL — STATE OF CALIFORNIA

Syn Yee Chin
FOR REVISION ONLY (1)

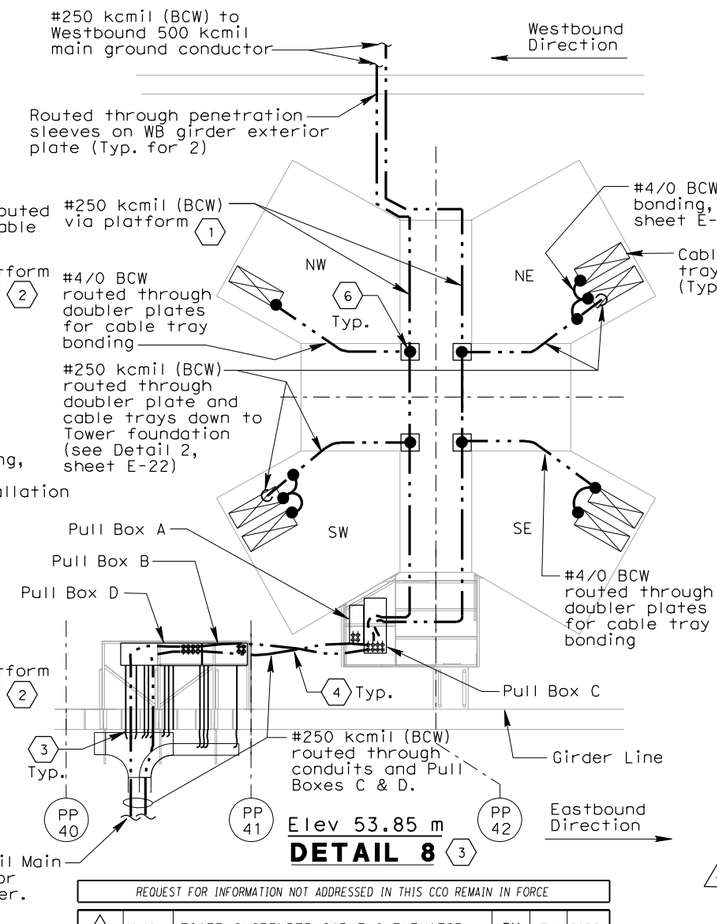

DETAIL 8 (3)

SHEET NOTES:

(1) Ground conductor shall be protected from damage when exposed outside the structures. Route ground cable in liquidtight flexible metal conduit (LFMC) for protection, unless routed in cable tray or wireway unless noted otherwise.

(2) Route #4/0 BCW through crossbeam exterior wall in liquidtight flexible metal conduit via conduit sleeves, see sheets E-114, E-115, E-116, E-117 and E-118.

(3) Install #2 BCW grounding conductors to grounding bushing for bonding conduits to cable tray.

(4) Install #2 BCW inside each liquidtight flex metal conduit and connect between the grounding wire and the conduit grounding bushing, see Detail 7 on sheet E-111B for similar installation.

(5) Ground conductor for equipment bonding shall be routed in the same conduit connected to equipment, see sheets E-71A, E-72A, E-73A, E-74A, E-75A, E-114, E-115, E-116, E-117 and E-118 for equipment arrangement.

(6) Grounding wire splices exposed outside the structures shall be enclosed with NEMA 4X pull box for protection. Where required, mechanical connection using Burndy Versitap Type QPX clamps or equal may be used for splices inside the box in lieu of exothermic weld. Pull box shall be 457 x 305 x 152D or size as required.

(7) Where exothermic weld connection is not feasible inside the wireway, compression type connectors may be used.

NOTES:

1. See sheet E-111 for additional notes and sheet notes.
2. (1) The contractor shall install pull box/JB(s) along conduit runs to limit bends to be three (3) 90 degrees or fewer.

REQUEST FOR INFORMATION NOT ADDRESSED IN THIS CCO REMAIN IN FORCE

MARK	DATE	DESCRIPTIONS	BY	CH'D	CCO#
(1)	09/02/11	TOWER SUSPENDER CABLE & ELEVATOR	RM	TW	203S1
(0)	11/20/09	ELECTRICAL GROUNDING	AG RR	RG	75

REVISIONS

CONTRACT CHANGE ORDER NO. _____
SHEET _____ OF _____

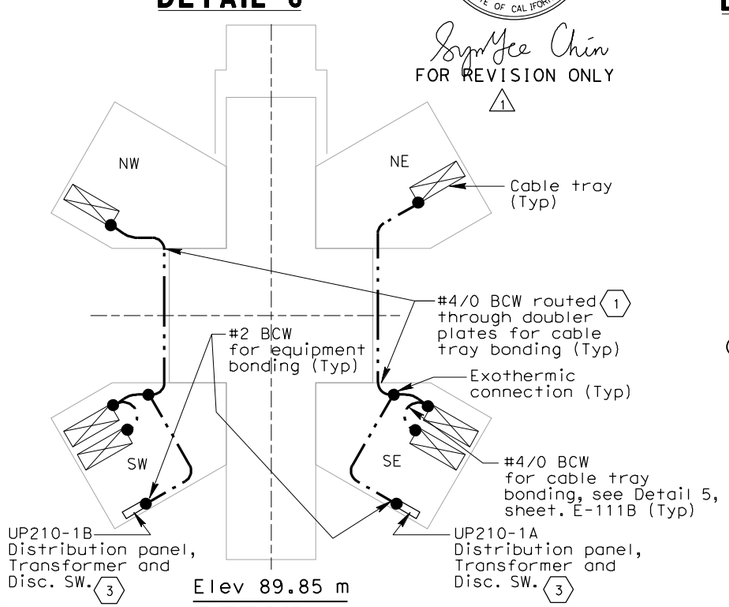

DETAIL 9

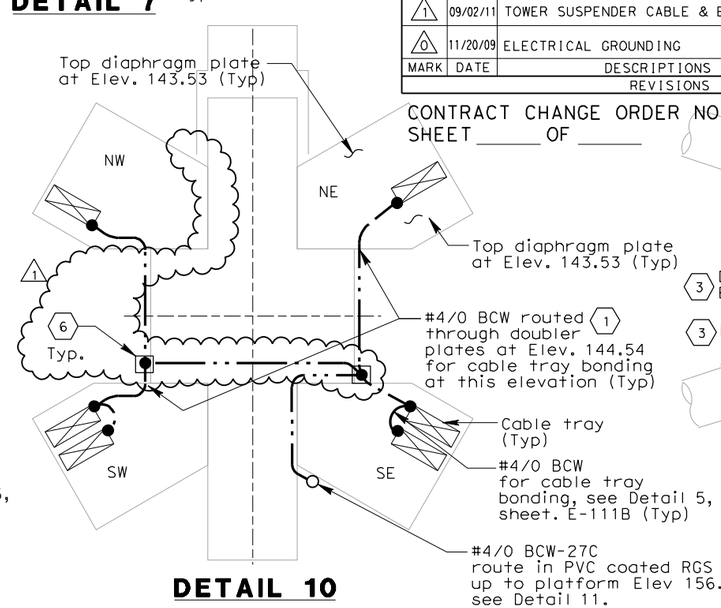

DETAIL 10

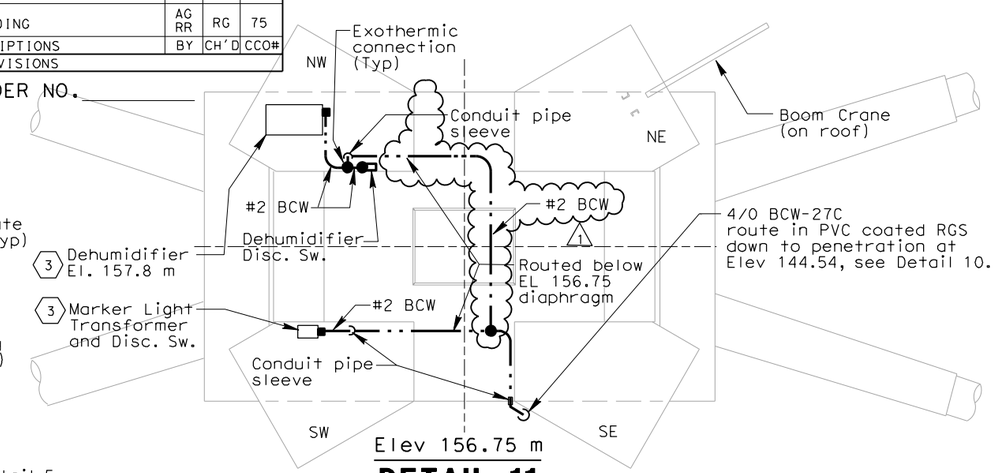

DETAIL 11

DETAILS
SAS SUPERSTRUCTURE GIRDER WESTBOUND GROUNDING DETAILS
NO SCALE

E-111A

THIS PLAN IS ACCURATE FOR ELECTRICAL WORK ONLY.

ALL DIMENSIONS ARE IN MILLIMETERS UNLESS OTHERWISE SHOWN.

FOR REDUCED PLANS ORIGINAL SCALE IS IN MILLIMETERS 0 20 40 60 80

DGN FILE =>04-0120f1_0165S01r01.dgn
USERNAME =>fusco

CU 04251 | EA 0120F1

CALCULATED/ DESIGNED BY	AWG	DATE 08/08	REVISED BY
CHECKED BY	RG	08/08	DATE REVISED

DESIGN OVERSIGHT — BEHZAD GOLEMOHAMMADI

STATE OF CALIFORNIA - DEPARTMENT OF TRANSPORTATION — Caltrans

LAST REVISION 00-00-00 — DATE PLOTTED => 8/31/2011 TIME PLOTTED => 3:44:42 PM