DIST.	COUNTY	ROUTE	KILOMETER POST TOTAL PROJECT	SHEET NO.	TOTAL SHEETS
04	SF	80	13.2/13.9	938S8	1204

REGISTERED ENGINEER - CIVIL

06-15-11

PLANS APPROVAL DATE

REGISTERED PROFESSIONAL ENGINEER James P. Duxbury No. C 64677 Exp. 06/30/13 CIVIL STATE OF CALIFORNIA

The State of California or its officers or agents shall not be responsible for the accuracy or completeness of electronic copies of this plan sheet.

T.Y. LIN / MOFFATT & NICHOL
825 BATTERY STREET
SAN FRANCISCO, CA 94111

Caltrans now has a web site! To get to the web site, go to: http://www.dot.ca.gov

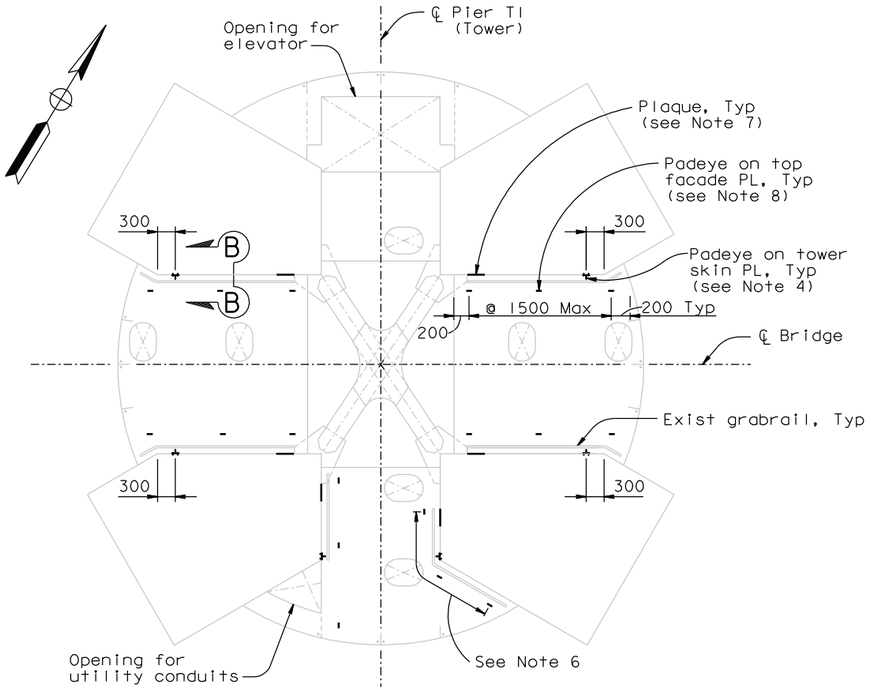

STRUT FACADE TYPE A PADEYES (All elevations)
1:50

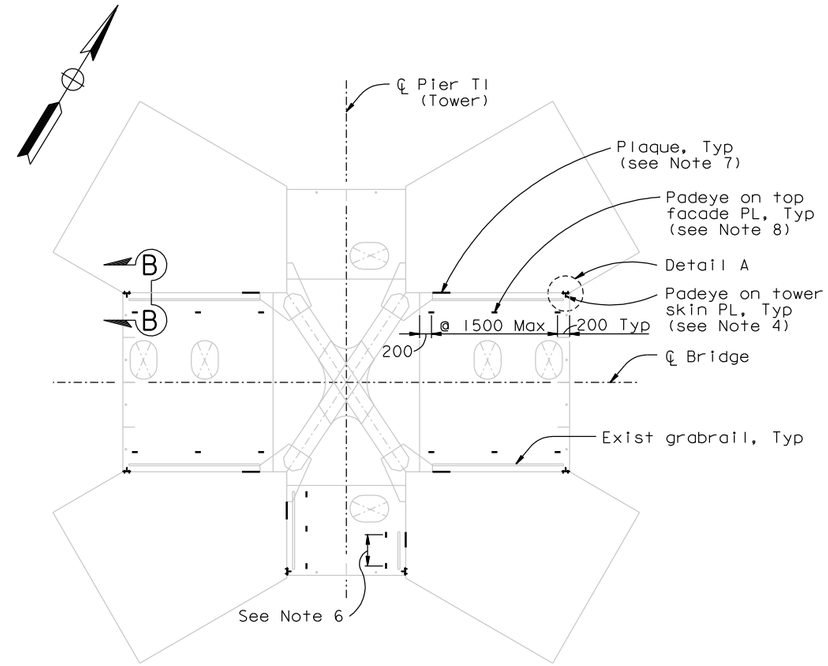

STRUT FACADE TYPE B PADEYES (All elevations)
1:50

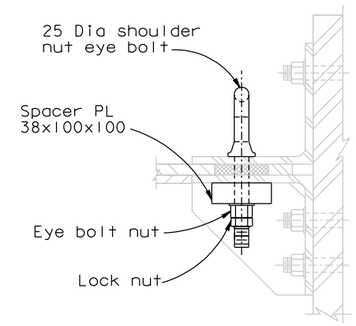

DETAIL B (Shoulder nut eye bolt detail)
1:5

NOTES:

1. Padeyes shall be Crosby size No. 4 or equivalent, with a 25 mm diameter center hole.
2. All steel shall be ASTM A709M Grade 345 UNO.
3. High strength bolts shall be ASTM A325MT. At the Contractor's option, equivalent imperial A325T may be used.
4. Padeyes attached to tower skin plates shall be provided only at strut facade elevations which do not have handrails at the exterior edge of the facades.
5. At the Contractor's option, either field bolting or field welding may be used to attach the padeyes to the tower skin plates.
6. Padeyes shall be located to clear existing access openings and doors in top facade plates. Padeye spacing shall not exceed 1500 mm.
7. NOT FOR TIE-OFF

   The grabrail shall not be used as a tie-off rail. Post this information on a stainless steel plaque (200x300 minimum) above the grabrail. Plaques shall be mounted to the skin plates using 6 mm (1/4 inch) Dia stainless cap screws.
8. At the Contractor's option, in lieu of welded padeyes on top facade plate, 25 mm Dia Crosby forged shoulder nut eye bolts or equivalent may be used through the holes in the existing facade seal angles. Spacer plates shall be provided to ensure full thread engagement of the nut. Nut shall be installed snug-tight. Jam nut or lock nut shall be used to prevent bolt nut from backing off. See Detail B.

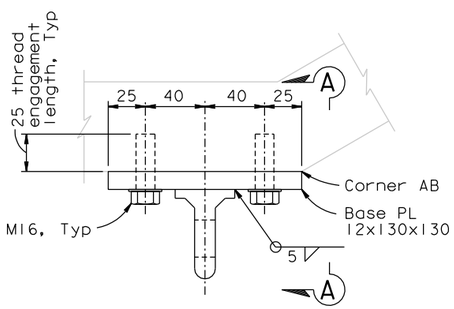

FIELD BOLTING ALTERNATE

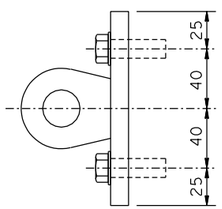

VIEW A-A

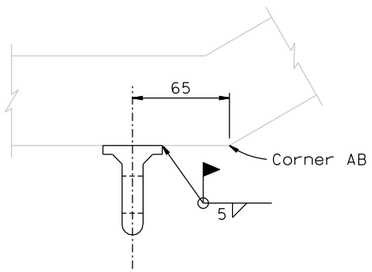

FIELD WELDING ALTERNATE

DETAIL A (See Note 5)
1:2

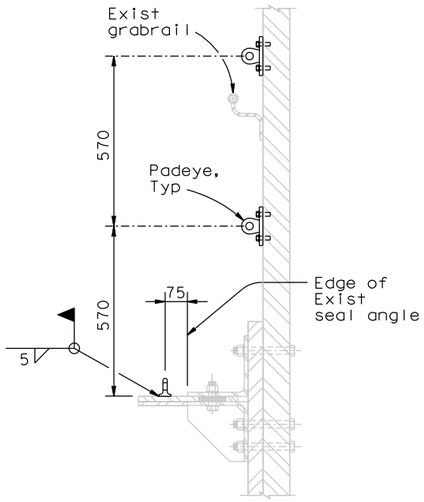

SECTION B-B
1:10

CONTRACT CHANGE ORDER NO. _____
SHEET ____ OF ____

REQUESTS FOR INFORMATION NOT ADDRESSED IN THIS CCO REMAIN IN FORCE

ALL DIMENSIONS ARE IN MILLIMETERS UNLESS OTHERWISE SHOWN

R. Valizadeh/V. Toan/Y.L./W.L./F.C.
DESIGN OVERSIGHT
Roya Valizadeh / Vong P. Toan / Y. Liu
SIGN OFF DATE 06/15/11

MARK	DATE	DESCRIPTIONS	BY	CH'D	CCO#
0	06/15/11	TOWER STRUT FACADE LADDER	NV	JD	201

REVISIONS

	BY	CHECKED
DESIGN	N. Vo	J. Duxbury
DETAILS	N. Vo	J. Duxbury
QUANTITIES	N. Vo	J. Duxbury

PREPARED FOR THE STATE OF CALIFORNIA DEPARTMENT OF TRANSPORTATION

R. Manzanarez
PROJECT ENGINEER

BRIDGE NO. 34-0006L/R
KILOMETER POST 13.2/13.9

SAN FRANCISCO OAKLAND BAY BRIDGE
EAST SPAN SEISMIC SAFETY PROJECT
SELF-ANCHORED SUSPENSION BRIDGE
(SUPERSTRUCTURE & TOWER)

TOWER ACCESS DETAILS NO. 30

Rev. Date: 5-18-98

ORIGINAL SCALE IN MILLIMETERS FOR REDUCED PLANS 0 10 20 30 40 50 60 70 80 90 100

CU 04
EA 0120F1

DISREGARD PRINTS BEARING EARLIER REVISION DATES 06/15/11

REVISION DATES (PRELIMINARY STAGE ONLY)

SHEET 521S8 OF

FILE => I:\bb\04-012001\sas\contract plans and cco\cco\cco#201\2-update 06-15-11\dgn\akacc22h.dgn

100 % PS&E

USERNAME => DWinrow DATE PLOTTED => 15 JUN 2011 TIME PLOTTED => 09:38:31