DIST.	COUNTY	ROUTE	KILOMETER POST TOTAL PROJECT	SHEET NO.	TOTAL SHEETS
04	SF	80	13.2/13.9	938S7	1204

REGISTERED ENGINEER - CIVIL

06-10-11
PLANS APPROVAL DATE

REGISTERED PROFESSIONAL ENGINEER James P. Duxbury No. C 64677 Exp. 06/30/13 CIVIL STATE OF CALIFORNIA

The State of California or its officers or agents shall not be responsible for the accuracy or completeness of electronic copies of this plan sheet.

T.Y. LIN / MOFFATT & NICHOL
825 BATTERY STREET
SAN FRANCISCO, CA 94111

Caltrans now has a web site! To get to the web site, go to: http://www.dot.ca.gov

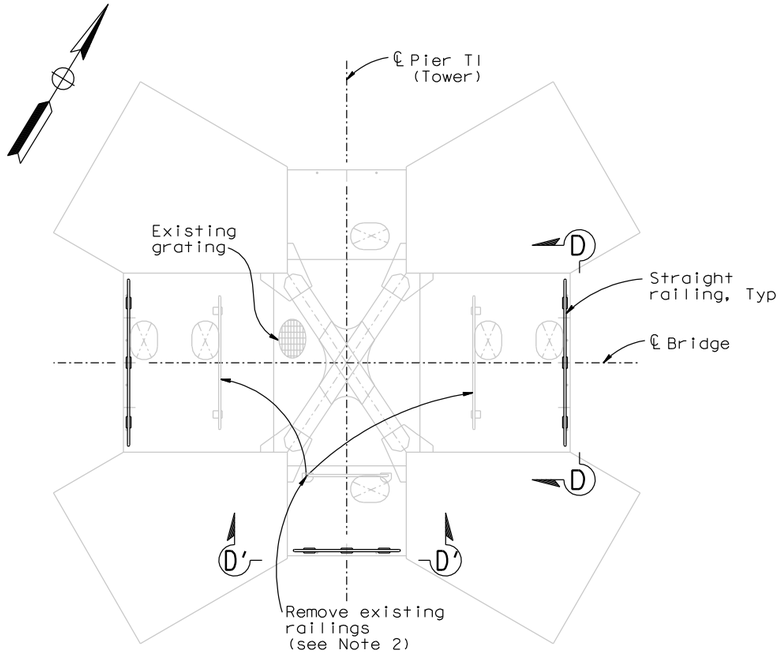

SECTION A-A
1:50

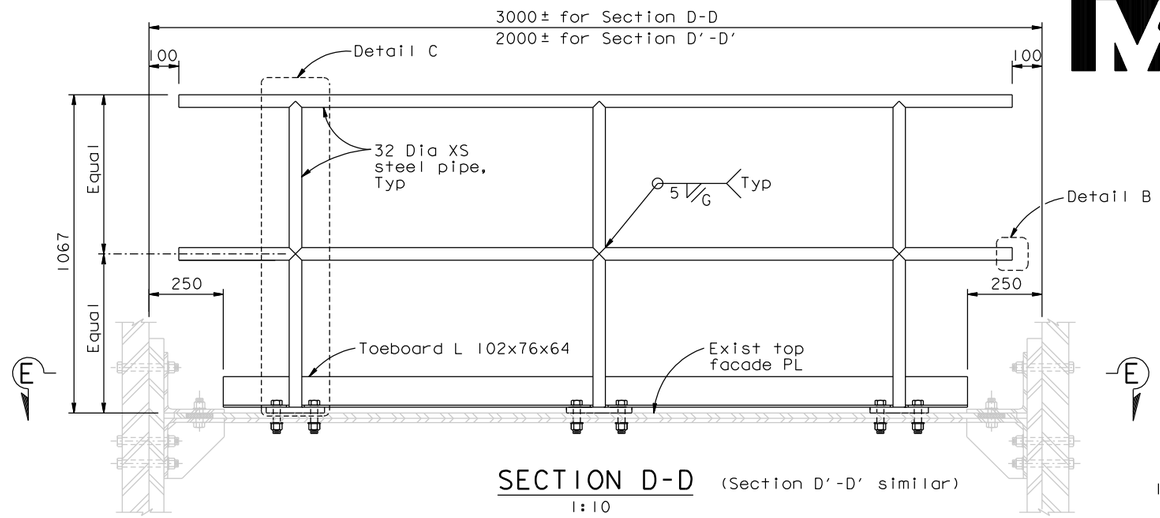

SECTION D-D (Section D'-D' similar)
1:10

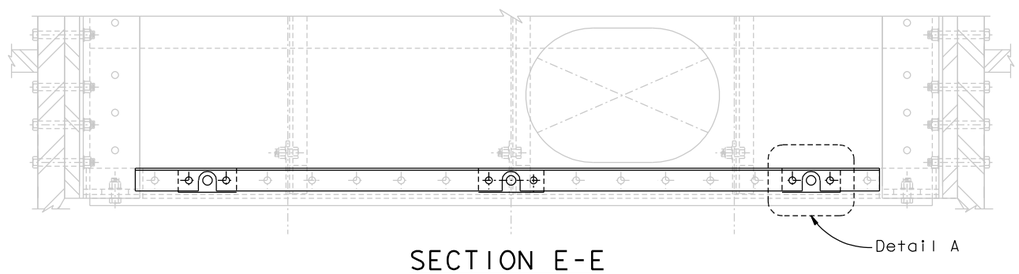

SECTION E-E
1:10

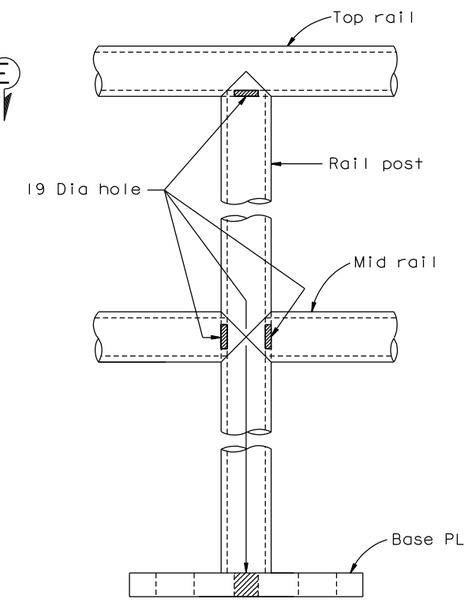

DETAIL C (Holes for galvanizing. Other details not shown for clarity)
1:2.5

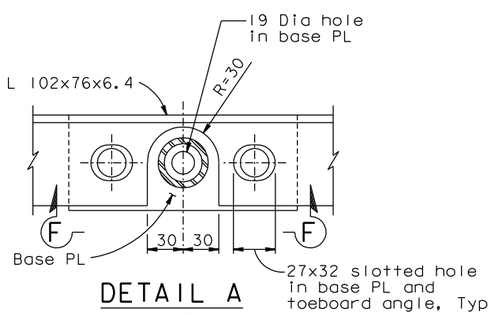

DETAIL A
1:2.5

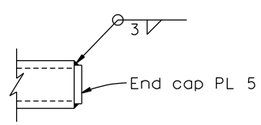

DETAIL B
1:2

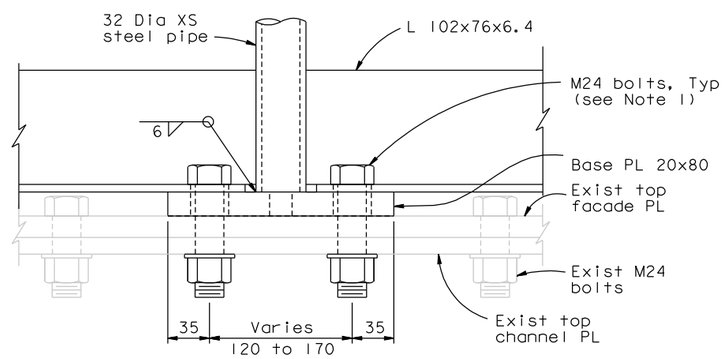

SECTION F-F
1:2.5

NOTES:

1. At the Contractor's option, imperial 25 Dia A325 bolts may be used in lieu of M24 bolts.
2. After railing removal, all bolt holes in the existing top facade plates shall be plugged using M16 HS bolts (or imperial equivalent at the Contractor's option) with washer underneath the nut and bolt head. Bolt head shall be on the outside.

CONTRACT CHANGE ORDER NO. _____
SHEET ____ OF ____

REQUESTS FOR INFORMATION NOT ADDRESSED IN THIS CCO REMAIN IN FORCE

ALL DIMENSIONS ARE IN MILLIMETERS UNLESS OTHERWISE SHOWN

R. Valizadeh/V. Toan/Y.L./W.L./F.C.
DESIGN OVERSIGHT
SIGN OFF DATE 06/10/11

MARK	DATE	DESCRIPTIONS	BY	CH'D	CCO#
0	06/10/11	TOWER STRUT FACADE LADDER	NV	JD	201

REVISIONS

	BY	CHECKED
DESIGN	N. Vo	J. Duxbury
DETAILS	N. Vo	J. Duxbury
QUANTITIES	N. Vo	J. Duxbury

PREPARED FOR THE STATE OF CALIFORNIA DEPARTMENT OF TRANSPORTATION

R. Manzanarez
PROJECT ENGINEER

BRIDGE NO. 34-0006L/R
KILOMETER POST 13.2/13.9

SAN FRANCISCO OAKLAND BAY BRIDGE
EAST SPAN SEISMIC SAFETY PROJECT
SELF-ANCHORED SUSPENSION BRIDGE
(SUPERSTRUCTURE & TOWER)

TOWER ACCESS DETAILS NO. 29

Rev. Date: 5-18-98

ORIGINAL SCALE IN MILLIMETERS FOR REDUCED PLANS 0 10 20 30 40 50 60 70 80 90 100

CU 04
EA 0120F1

DISREGARD PRINTS BEARING EARLIER REVISION DATES 06/10/11

REVISION DATES (PRELIMINARY STAGE ONLY)

SHEET 521S7 OF

FILE => I:\bb\04-012001\sas\contract plans and cco\cco\cco#201\1-original 06-10-11\dgn\akacc22g.dgn

USERNAME => DWinrow DATE PLOTTED => 10 JUN 2011 TIME PLOTTED => 08:56:52

100% PS&E