DIST.	COUNTY	ROUTE	KILOMETER POST TOTAL PROJECT	SHEET NO.	TOTAL SHEETS
04	SF	80	13.2/13.9	762SIR1	1204

REGISTERED ENGINEER - CIVIL

10-04-11
PLANS APPROVAL DATE

REGISTERED PROFESSIONAL ENGINEER Marwan N. Nader No. C 054426 Exp. 12/31/11 CIVIL STATE OF CALIFORNIA

The State of California or its officers or agents shall not be responsible for the accuracy or completeness of electronic copies of this plan sheet.

T.Y. LIN / MOFFATT & NICHOL
825 BATTERY STREET
SAN FRANCISCO, CA 94111

Caltrans now has a web site! To get to the web site, go to: http://www.dot.ca.gov

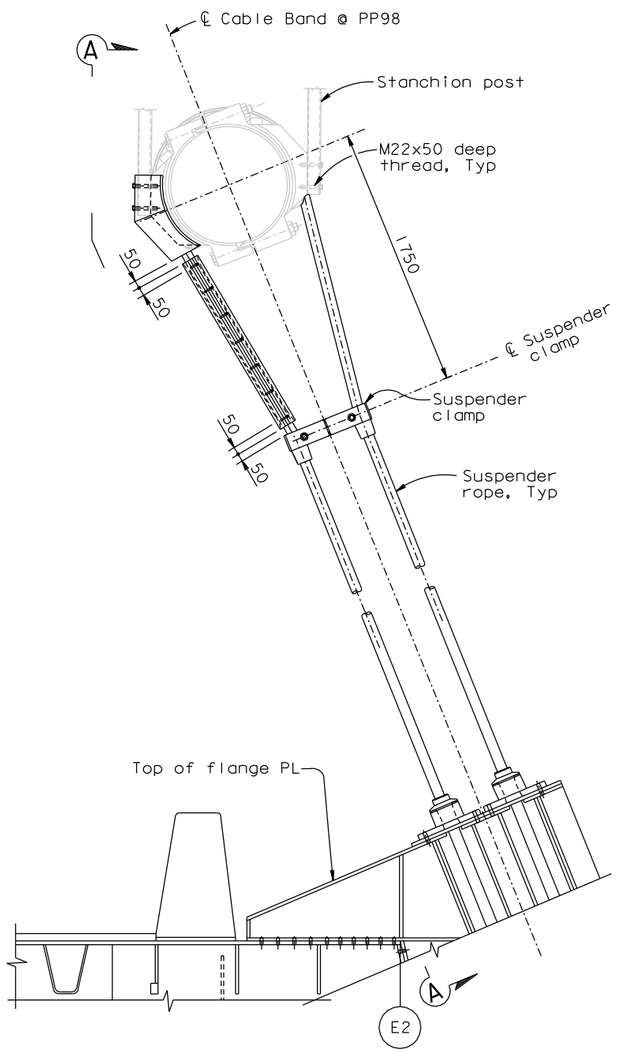

SUSPENDER PROTECTION AT PP 98 (See Note 1) (EB shown, WB similar)
1:20

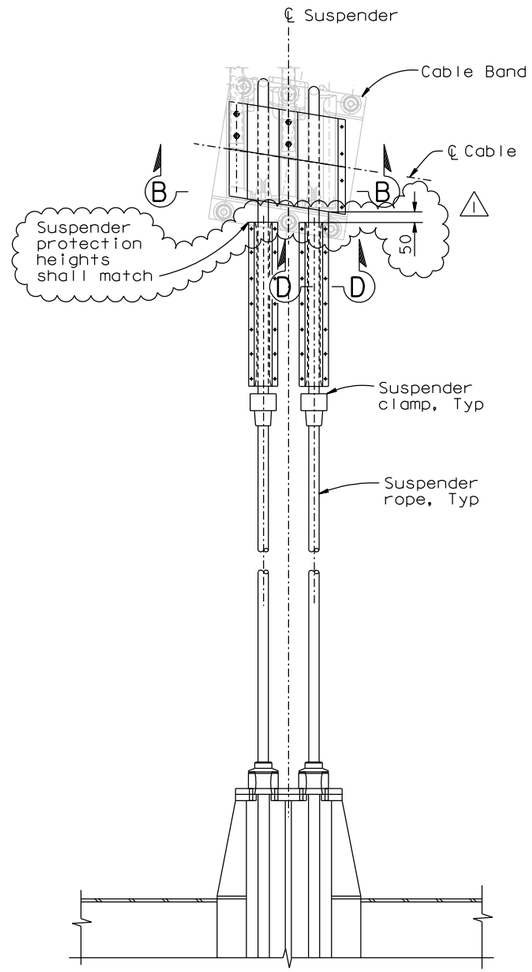

VIEW A-A
1:20

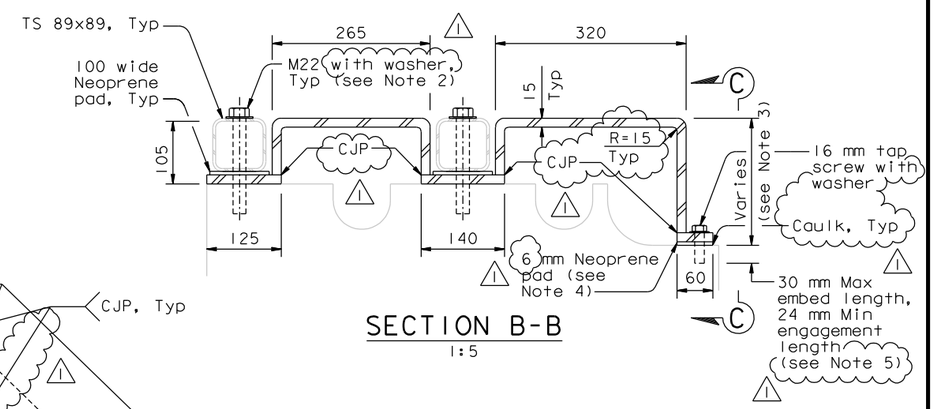

SECTION B-B
1:5

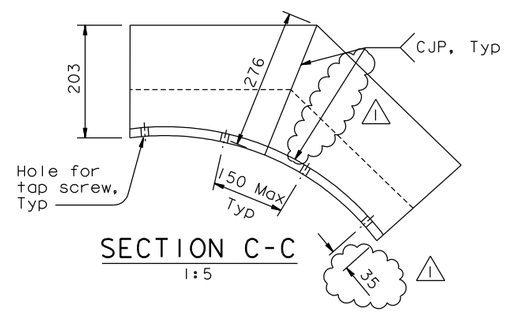

SECTION C-C
1:5

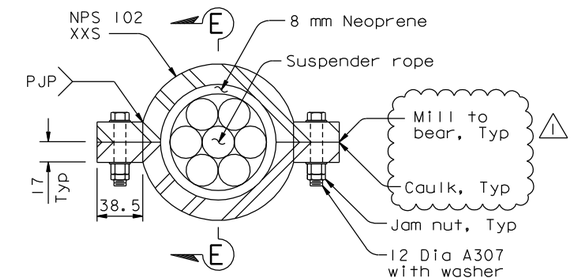

SECTION D-D
1:2.5

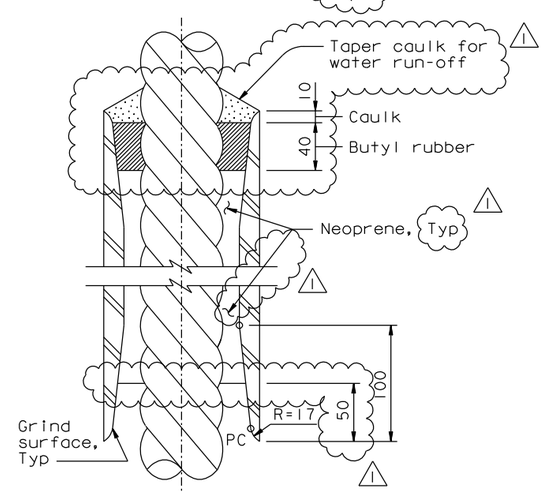

SECTION E-E
1:2.5

NOTES:

1. If the Department obtains a waiver to reduce the minimum clearance height between the roadway at the interior edge of the barrier and the Cable Band at PP 98, the Engineer shall direct the use of the suspender protection at PP 98.
2. M22 bolts shall be replaced with new longer M22 bolts.
3. Cable band shall be surveyed and cover plate shall be fabricated to match.
4. Neoprene pad shall be used to ensure tight fit between cable band and cover plate. Grind cable band as necessary.
5. Cable band shall be MT tested after drilling and tapping.

CONTRACT CHANGE ORDER NO. _____
SHEET ____ OF ____

REQUESTS FOR INFORMATION NOT ADDRESSED IN THIS CCO REMAIN IN FORCE

ALL DIMENSIONS ARE IN MILLIMETERS UNLESS OTHERWISE SHOWN

R. Valizadeh/V. Toan/Y.L./W.L./F.C.
DESIGN OVERSIGHT
SIGN OFF DATE 10/14/11

MARK	DATE	DESCRIPTIONS	BY	CH'D	CCO#
1	10/14/11	SUSPENDER PROTECTION @ PP 98	GB	JD	200S1
0	10/04/11	SUSPENDER PROTECTION @ PP 98	GB	JD	200S1

REVISIONS

	BY	CHECKED
DESIGN	G. Baker	J. Duxbury
DETAILS	G. Baker	J. Duxbury
QUANTITIES	G. Baker	J. Duxbury

PREPARED FOR THE STATE OF CALIFORNIA DEPARTMENT OF TRANSPORTATION

R. Manzanarez
PROJECT ENGINEER

BRIDGE NO. 34-0006L/R
KILOMETER POST 13.2/13.9

SAN FRANCISCO OAKLAND BAY BRIDGE
EAST SPAN SEISMIC SAFETY PROJECT
SELF-ANCHORED SUSPENSION BRIDGE
(SUPERSTRUCTURE & TOWER)

CABLE BAND DETAILS NO. 6

Rev. Date: 5-18-98

ORIGINAL SCALE IN MILLIMETERS FOR REDUCED PLANS 0 10 20 30 40 50 60 70 80 90 100

CU 04
EA 0120F1

DISREGARD PRINTS BEARING EARLIER REVISION DATES 10/04/11

REVISION DATES (PRELIMINARY STAGE ONLY)

SHEET 345SIR1 OF

FILE => L:\BB\04-012001\SAS\Contract Plans and CCO\CCO\CCO#200S1\4-Revision 10-14-11\DGN\agcbd06.dgn

USERNAME => DWinrow DATE PLOTTED => 14 OCT 2011 TIME PLOTTED => 08:44:29

100% PS&E