DIST.	COUNTY	ROUTE	KILOMETER POST TOTAL PROJECT	SHEET NO.	TOTAL SHEETS
04	SF	80	13.2/13.9	762S1R3	1204

REGISTERED ENGINEER - CIVIL

10-04-11
PLANS APPROVAL DATE

REGISTERED PROFESSIONAL ENGINEER Marwan N. Nader No. C 054426 Exp. 12/31/13 CIVIL STATE OF CALIFORNIA

The State of California or its officers or agents shall not be responsible for the accuracy or completeness of electronic copies of this plan sheet.

T.Y. LIN / MOFFATT & NICHOL
825 BATTERY STREET
SAN FRANCISCO, CA 94111

Caltrans now has a web site! To get to the web site, go to: http://www.dot.ca.gov

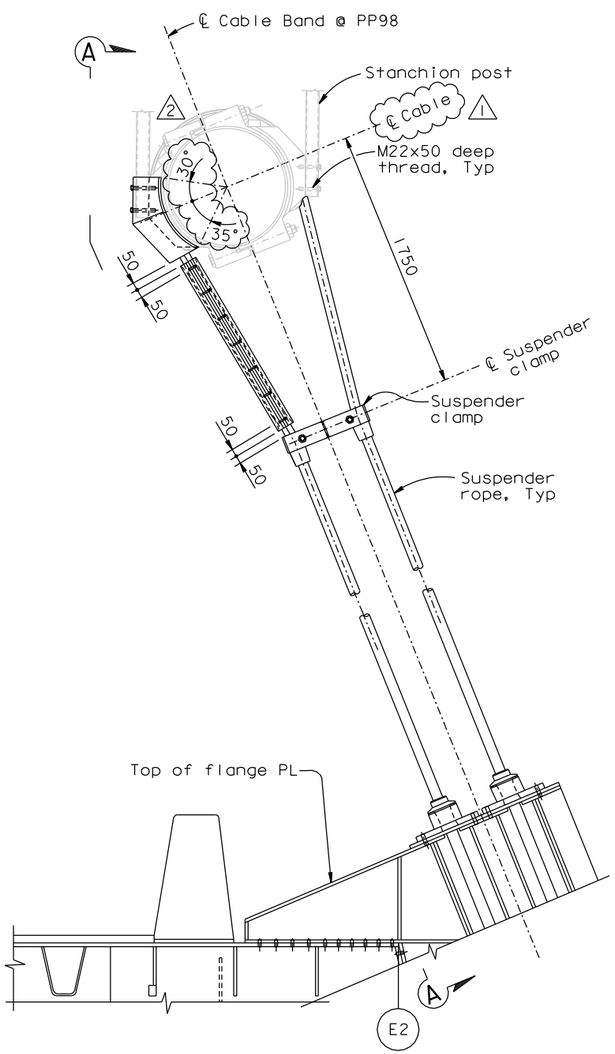

SUSPENDER PROTECTION AT PP 98 (See Note 1) (EB shown, WB similar)
1:20

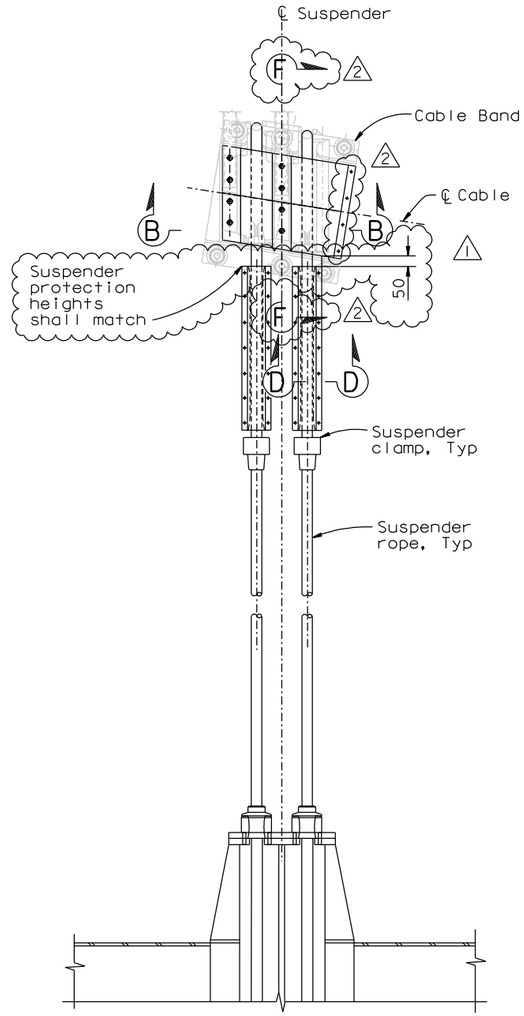

VIEW A-A
1:20

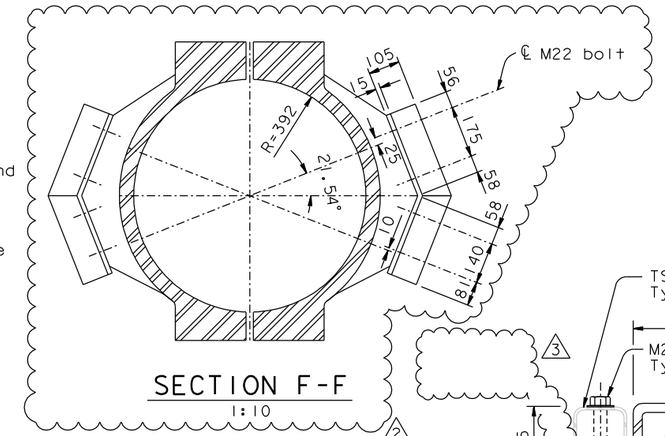

SECTION F-F
1:10

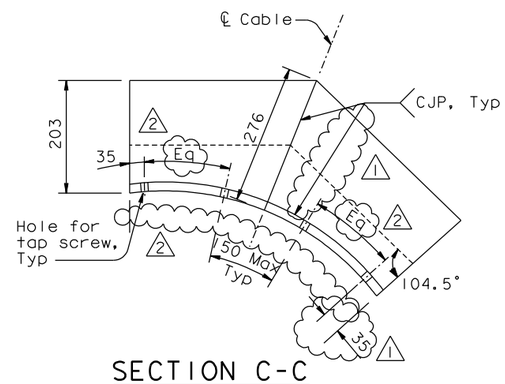

SECTION C-C
1:5

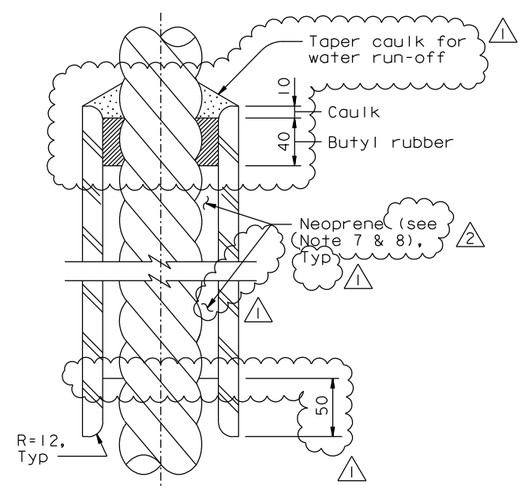

SECTION E-E
1:2.5

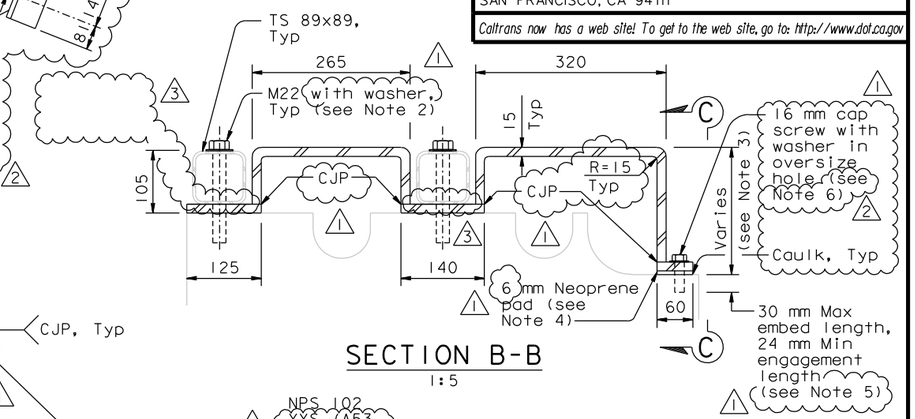

SECTION B-B
1:5

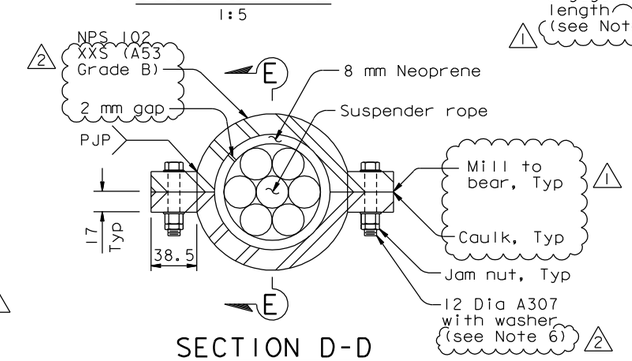

SECTION D-D
1:2.5

NOTES:

1. If the Department obtains a waiver to reduce the minimum clearance height between the roadway at the interior edge of the barrier and the Cable Band at PP 98, the Engineer shall direct the use of the suspender protection at PP 98.
2. M22 bolts shall be replaced with new longer M22 bolts.
3. Cable band shall be surveyed and cover plate shall be fabricated to match.
4. When approved by the Engineer, grinding of the cable band may be permitted to allow for a tight fit between the cable band and cover plate.
5. Cable band shall be MT tested after drilling and tapping.
6. At the Contractor's option, the equivalent imperial size may be used.
7. The neoprene shall be Durometer 50-60 for the cable band and suspender rope.
8. Use an adhesive conforming to Federal specification MMM-A-121 to bond neoprene to steel protection armour.

CONTRACT CHANGE ORDER NO. _____
SHEET ____ OF ____

REQUESTS FOR INFORMATION NOT ADDRESSED IN THIS CCO REMAIN IN FORCE

MARK	DATE	DESCRIPTIONS	BY	CH'D	CCO#
3	06/13/12	SUPPENDER PROTECTION @ PP 98	GB	JD	200S1
2	04/30/12	SUPPENDER PROTECTION @ PP 98	GB	JD	200S1
1	10/20/11	SUPPENDER PROTECTION @ PP 98	GB	JD	200S1
0	10/04/11	SUPPENDER PROTECTION @ PP 98	GB	JD	200S1

REVISIONS

R. Valizadeh/V. Toan/Y.L./W.L./F.C.
DESIGN OVERSIGHT
SIGN OFF DATE 06/13/12

	BY	CHECKED
DESIGN	G. Baker	J. Duxbury
DETAILS	G. Baker	J. Duxbury
QUANTITIES	G. Baker	J. Duxbury

PREPARED FOR THE STATE OF CALIFORNIA DEPARTMENT OF TRANSPORTATION

ALL DIMENSIONS ARE IN MILLIMETERS UNLESS OTHERWISE SHOWN

R. Manzanarez
PROJECT ENGINEER

BRIDGE NO. 34-0006L/R
KILOMETER POST 13.2/13.9

SAN FRANCISCO OAKLAND BAY BRIDGE
EAST SPAN SEISMIC SAFETY PROJECT
SELF-ANCHORED SUSPENSION BRIDGE
(SUPERSTRUCTURE & TOWER)

CABLE BAND DETAILS NO. 6

Rev. Date: 5-18-98

ORIGINAL SCALE IN MILLIMETERS FOR REDUCED PLANS 0 10 20 30 40 50 60 70 80 90 100

CU 04
EA 0120F1

DISREGARD PRINTS BEARING EARLIER REVISION DATES

REVISION DATES (PRELIMINARY STAGE ONLY) 10/04/11

SHEET 345S1R3 OF

FILE => L:\BB\04-012001\SAS\Contract Plans and CCO\CCO\CCO#200S1\7-Revision 06-13-12\DGN\agcbd06.dgn

USERNAME => DWinrow DATE PLOTTED => 13 JUN 2012 TIME PLOTTED => 10:35:43

100% PS&E