DIST.	COUNTY	ROUTE	KILOMETER POST TOTAL PROJECT	SHEET NO.	TOTAL SHEETS
04	SF	80	13.2/13.9	894S2R1	1204

Caltrans Metric

REGISTERED ENGINEER - CIVIL

04-19-11
PLANS APPROVAL DATE

REGISTERED PROFESSIONAL ENGINEER Tien Hung Ho No. C 43990 Exp. 06/30/11 CIVIL STATE OF CALIFORNIA

The State of California or its officers or agents shall not be responsible for the accuracy or completeness of electronic copies of this plan sheet.

T.Y. LIN / MOFFATT & NICHOL
825 BATTERY STREET
SAN FRANCISCO, CA 94111

Caltrans now has a web site! To get to the web site, go to: http://www.dot.ca.gov

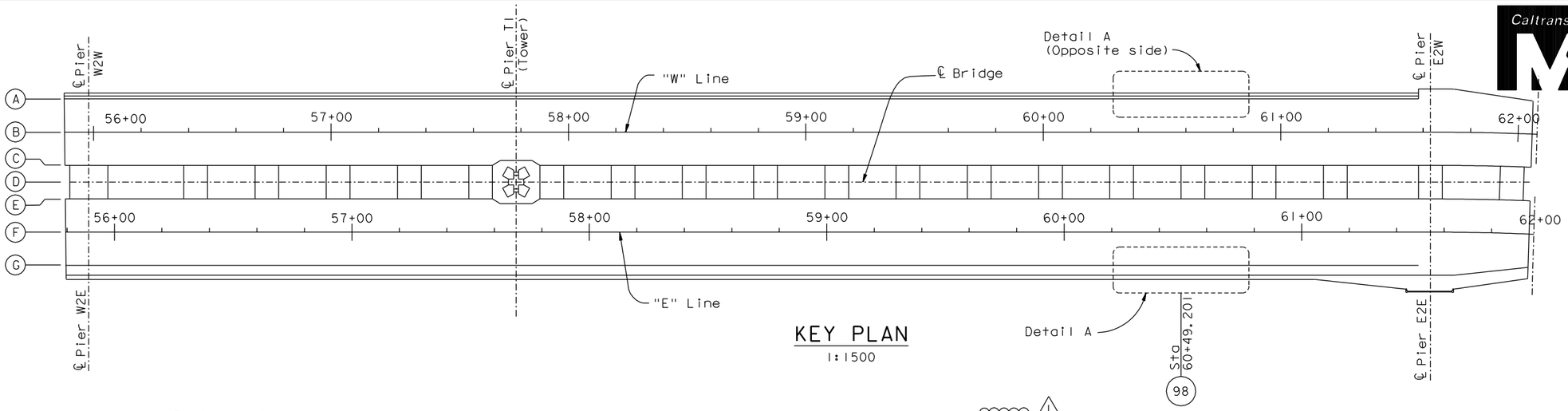

KEY PLAN
1:1500

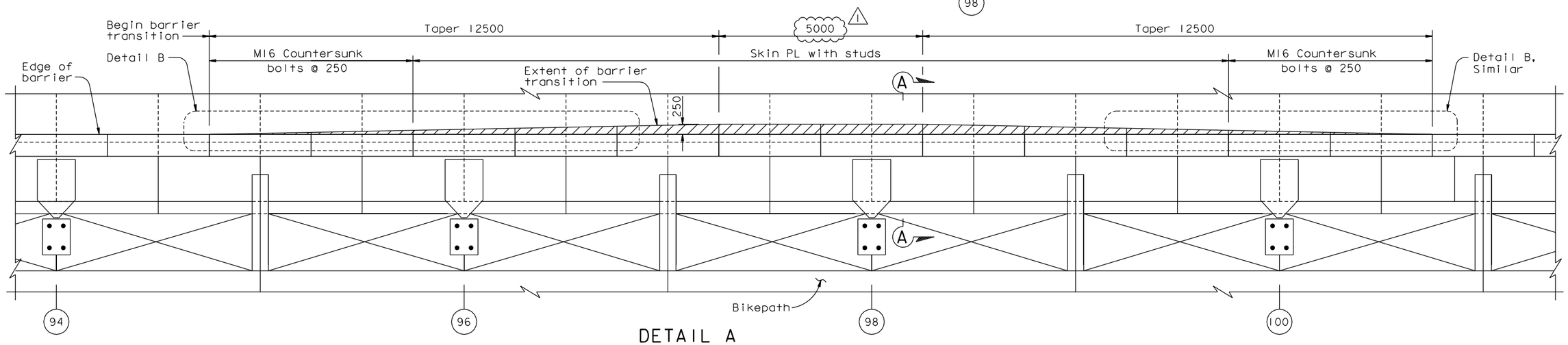

DETAIL A
1:50

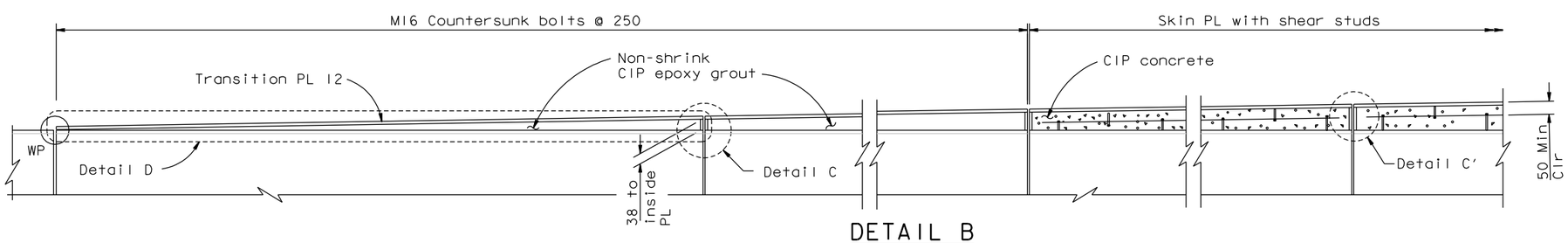

DETAIL B
1:10

NOTES:

1. If a minimum clearance height of 5.1 m between the roadway at the interior edge of the barrier and the Cable Band at PP 98 is not satisfied, the Engineer shall direct the use of the Barrier Build-Out At PP98.
2. Steel shall be ASTM A709M Grade 345.
3. For Section A-A, Detail C, Detail C' and Detail D, see "Barrier Details No.8" sheet.

CONTRACT CHANGE ORDER NO. ____
SHEET ___ OF ___

REQUESTS FOR INFORMATION NOT ADDRESSED IN THIS CCO REMAIN IN FORCE

BARRIER BUILD-OUT AT PP 98 (See Note 1)

ALL DIMENSIONS ARE IN MILLIMETERS UNLESS OTHERWISE SHOWN

R. Valizadeh/V. Toan/Y.L./W.L./F.C.
DESIGN OVERSIGHT
Reza Valizadeh / Vong Toan / Y. Liu
SIGN OFF DATE 04/29/11

MARK	DATE	DESCRIPTIONS	BY	CH'D	CCO#
1	04/29/11	SAS VERTICAL CLEARANCE AT PP 98	TH	RM	200
0	04/19/11	SAS VERTICAL CLEARANCE AT PP 98	TH	RM	200

REVISIONS

DESIGN	BY T. Ho	CHECKED R. Manzanarez	
DETAILS	BY R. Manzanarez	CHECKED J. Duxbury	
QUANTITIES	BY R. Manzanarez	CHECKED A. Baumberger	

PREPARED FOR THE STATE OF CALIFORNIA DEPARTMENT OF TRANSPORTATION

R. Manzanarez
PROJECT ENGINEER

BRIDGE NO. 34-0006L/R
KILOMETER POST 13.2/13.9

SAN FRANCISCO OAKLAND BAY BRIDGE
EAST SPAN SEISMIC SAFETY PROJECT
SELF-ANCHORED SUSPENSION BRIDGE
(SUPERSTRUCTURE & TOWER)

BARRIER DETAILS NO. 7

Rev. Date: 5-18-98

ORIGINAL SCALE IN MILLIMETERS FOR REDUCED PLANS 0 10 20 30 40 50 60 70 80 90 100

CU 04
EA 0120F1

DISREGARD PRINTS BEARING EARLIER REVISION DATES 04/19/11

REVISION DATES (PRELIMINARY STAGE ONLY)

SHEET 477S2R1 OF

FILE => I:\bb\04-012001\sas\contract plans and cco\cco\cco#200\2-revision 04-29-11\dgn\agsad15.dgn

100% PS&E

USERNAME => arivera DATE PLOTTED => 29 APR 2011 TIME PLOTTED => 08:33:55

DIST.	COUNTY	ROUTE	KILOMETER POST TOTAL PROJECT	SHEET NO.	TOTAL SHEETS
04	SF	80	13.2/13.9	894S3	1204

Caltrans Metric

REGISTERED ENGINEER - CIVIL

04-19-11
PLANS APPROVAL DATE

REGISTERED PROFESSIONAL ENGINEER Tien Hung Ho No. C 43990 Exp. 06/30/11 CIVIL STATE OF CALIFORNIA

The State of California or its officers or agents shall not be responsible for the accuracy or completeness of electronic copies of this plan sheet.

T.Y. LIN / MOFFATT & NICHOL
825 BATTERY STREET
SAN FRANCISCO, CA 94111

Caltrans now has a web site! To get to the web site, go to: http://www.dot.ca.gov

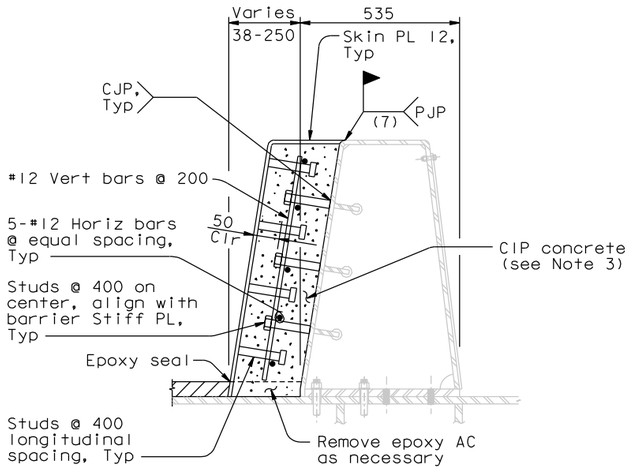

SECTION A-A
1:10

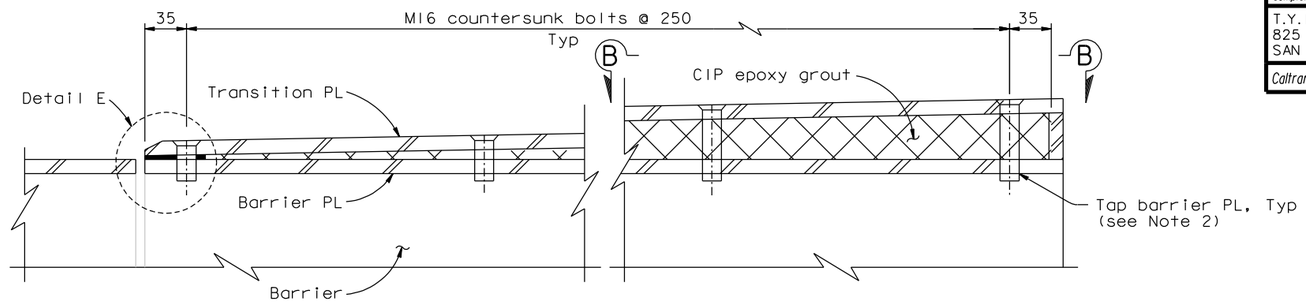

DETAIL D
1:2.5

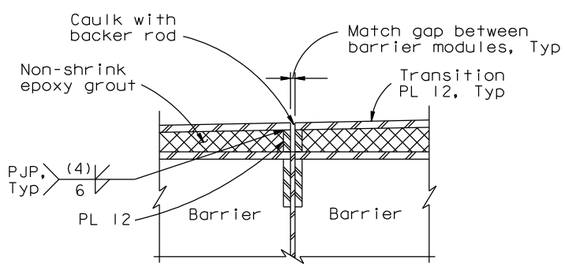

DETAIL C
1:5

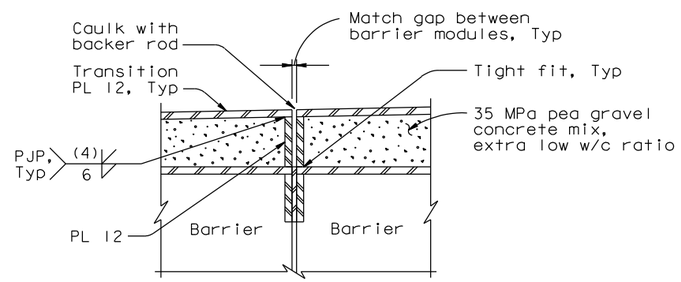

DETAIL C'
1:5

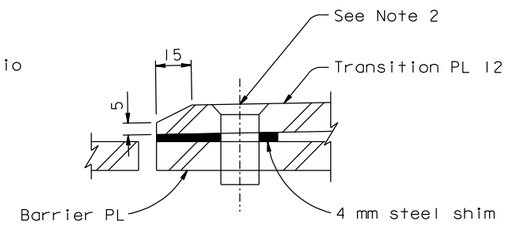

DETAIL E
1:1.25

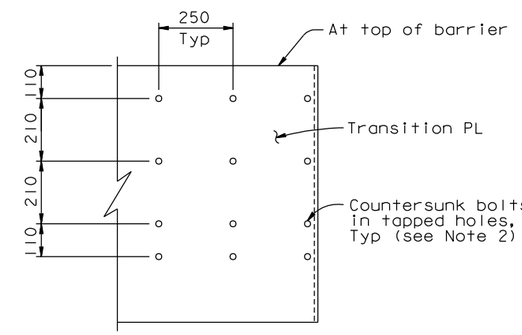

VIEW B-B
1:10

NOTES:

1. For details not shown, see "Barrier Details No.1" thru "Barrier Details No.6A" sheets.
2. Tapped holes and counterbores shall be drilled normal to the Barrier PL.
3. Ports and vents for CIP concrete shall be placed subject to review and approval of the Engineer.

CONTRACT CHANGE ORDER NO. _____
SHEET ____ OF ____

REQUESTS FOR INFORMATION NOT ADDRESSED IN THIS CCO REMAIN IN FORCE

ALL DIMENSIONS ARE IN MILLIMETERS UNLESS OTHERWISE SHOWN

R. Valizadeh/V. Toan/Y.L./W.L./F.C.
DESIGN OVERSIGHT
SIGN OFF DATE 04/19/11

MARK	DATE	DESCRIPTIONS	BY	CH'D	CCO#
0	04/19/11	SAS VERTICAL CLEARANCE AT PP 98	TH	RM	200

REVISIONS

DESIGN	BY T. Ho	CHECKED R. Manzanarez	
DETAILS	BY R. Manzanarez	CHECKED J. Duxbury	
QUANTITIES	BY R. Manzanarez	CHECKED A. Baumberger	

PREPARED FOR THE STATE OF CALIFORNIA DEPARTMENT OF TRANSPORTATION

R. Manzanarez
PROJECT ENGINEER

BRIDGE NO. 34-0006L/R
KILOMETER POST 13.2/13.9

SAN FRANCISCO OAKLAND BAY BRIDGE
EAST SPAN SEISMIC SAFETY PROJECT
SELF-ANCHORED SUSPENSION BRIDGE
(SUPERSTRUCTURE & TOWER)

BARRIER DETAILS NO. 8

Rev. Date: 5-18-98

ORIGINAL SCALE IN MILLIMETERS FOR REDUCED PLANS 0 10 20 30 40 50 60 70 80 90 100

CU 04
EA 0120F1

DISREGARD PRINTS BEARING EARLIER REVISION DATES 04/19/11

REVISION DATES (PRELIMINARY STAGE ONLY)

SHEET 477S3 OF

FILE => I:\bb\04-012001\sas\contract plans and cco\cco\cco*200\dgn\agsad16.dgn

100% PS&E

USERNAME => DWinrow DATE PLOTTED => 19 APR 2011 TIME PLOTTED => 14:12:08