DIST.	COUNTY	ROUTE	KILOMETER POST TOTAL PROJECT	SHEET NO.	TOTAL SHEETS
04	SF	80	13.2/13.9	800S9	1204

Caltrans Metric

REGISTERED ENGINEER - CIVIL

05-11-11
PLANS APPROVAL DATE

REGISTERED PROFESSIONAL ENGINEER Marwan N. Nader No. C 054426 Exp. 12/31/11 CIVIL STATE OF CALIFORNIA

The State of California or its officers or agents shall not be responsible for the accuracy or completeness of electronic copies of this plan sheet.

T.Y. LIN / MOFFATT & NICHOL
825 BATTERY STREET
SAN FRANCISCO, CA 94111

Caltrans now has a web site! To get to the web site, go to: http://www.dot.ca.gov

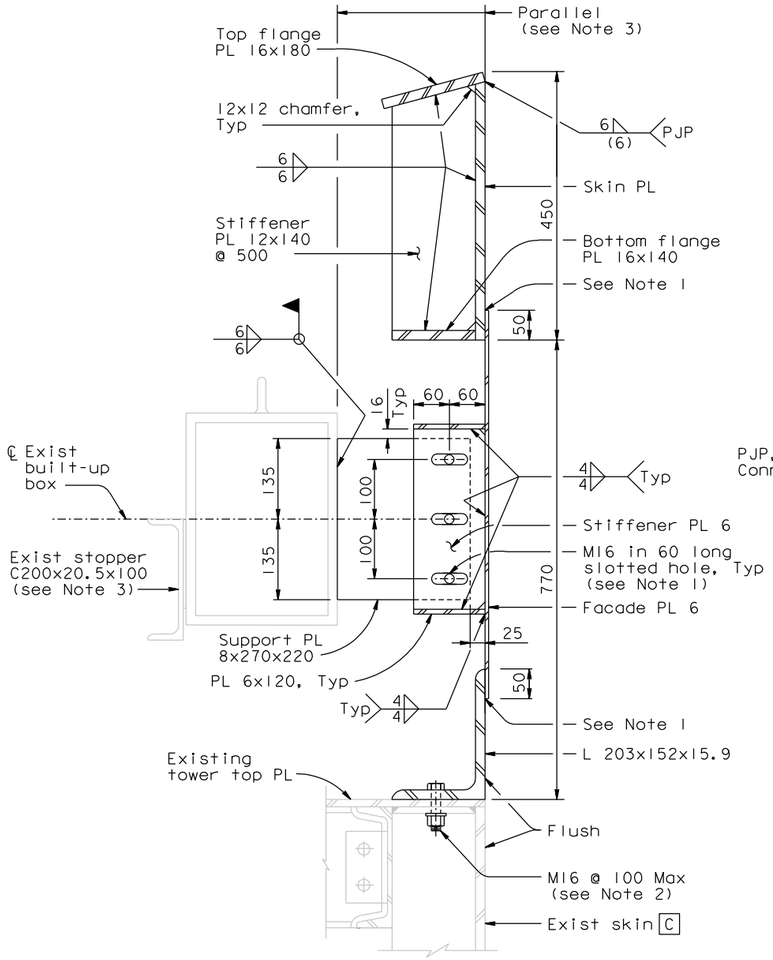

SECTION A-A
1:5

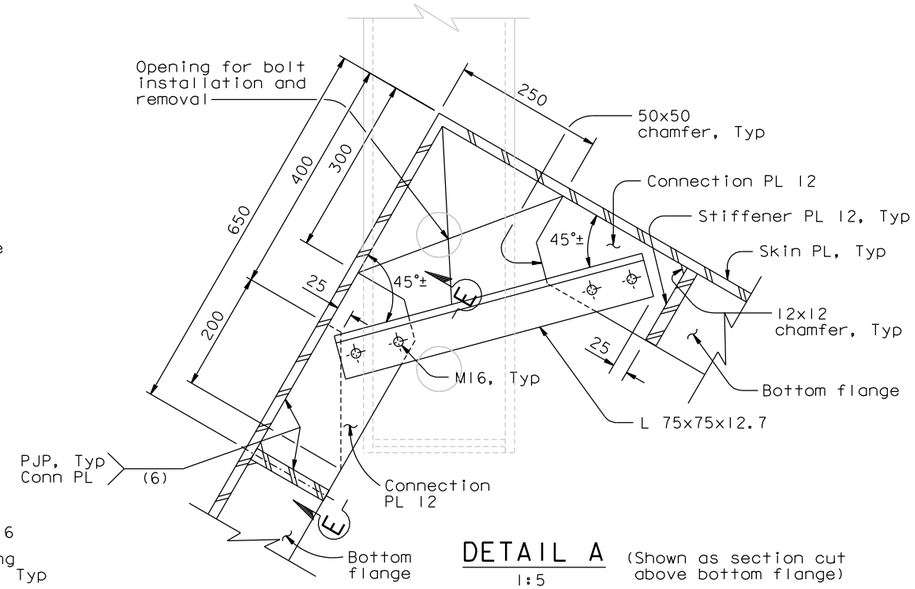

DETAIL A
1:5
(Shown as section cut above bottom flange)

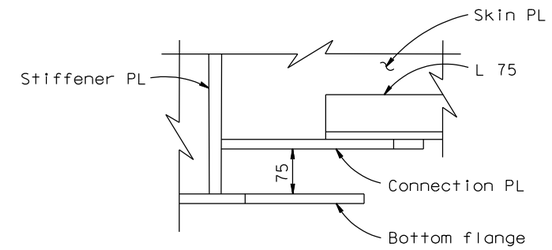

SECTION E-E
1:5

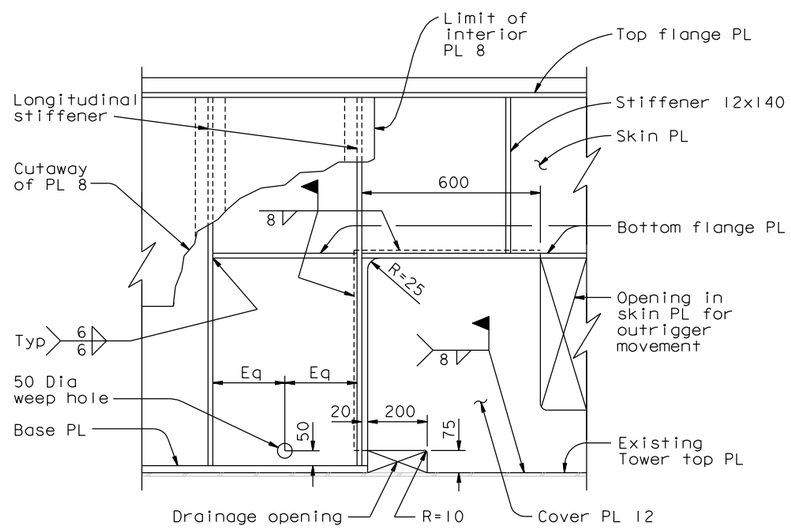

SECTION B-B
1:10

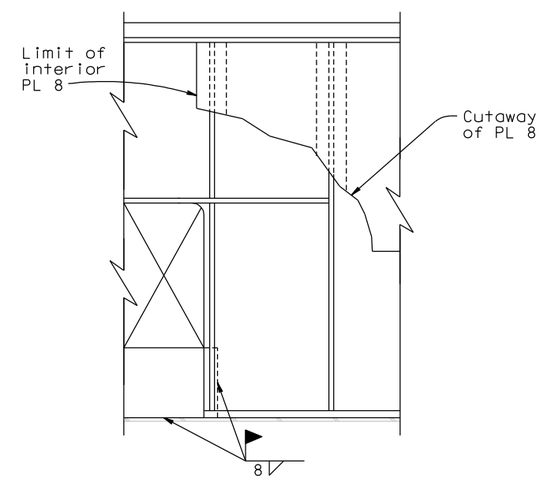

SECTION C-C
1:10
(For details not shown, see Section B-B)

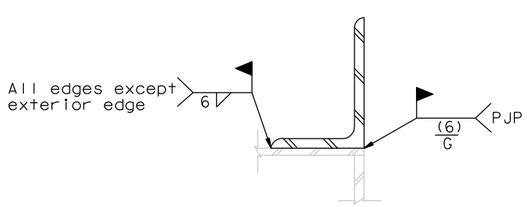

WELDED ANGLE DETAIL
1:5

NOTES:

1. Adjust to achieve tight-fit of facade plate in retracted position.
2. At the Contractor's option, angle may be welded in lieu of bolting. See "Welded Angle Detail".
3. Reposition stopper as required such that outrigger beam in the retracted position is parallel to the skin PL.

CONTRACT CHANGE ORDER NO. _____
SHEET ____ OF ____

REQUESTS FOR INFORMATION NOT ADDRESSED IN THIS CCO REMAIN IN FORCE

ALL DIMENSIONS ARE IN MILLIMETERS UNLESS OTHERWISE SHOWN

MARK	DATE	DESCRIPTIONS	BY	CH'D	CCO#
0	05/11/11	PARAPET WALL AT TOWER HEAD	NV	MN	196

REVISIONS

R. Valizadeh/V. Toan/Y.L./W.L./F.C.
DESIGN OVERSIGHT
Roya Valizadeh / Vong Toan / Y. Liu
SIGN OFF DATE 05/11/11

DESIGN BY N. Vo CHECKED M. Nader
DETAILS BY N. Vo CHECKED A. Baumberger
QUANTITIES BY N. Vo CHECKED J. Duxbury

PREPARED FOR THE STATE OF CALIFORNIA DEPARTMENT OF TRANSPORTATION

R. Manzanarez
PROJECT ENGINEER

BRIDGE NO. 34-0006L/R
KILOMETER POST 13.2/13.9

SAN FRANCISCO OAKLAND BAY BRIDGE
EAST SPAN SEISMIC SAFETY PROJECT
SELF-ANCHORED SUSPENSION BRIDGE
(SUPERSTRUCTURE & TOWER)

PARAPET WALL AT TOWER HEAD DETAILS NO. 5

Rev. Date: 5-18-98

ORIGINAL SCALE IN MILLIMETERS FOR REDUCED PLANS 0 10 20 30 40 50 60 70 80 90 100

CU 04
EA 0120F1

DISREGARD PRINTS BEARING EARLIER REVISION DATES 05/11/11

REVISION DATES (PRELIMINARY STAGE ONLY)

SHEET 383S9 OF

FILE => I:\bb\04-012001\sas\contract plans and cco\cco\cco#196\2-update 05-11-11\dgn\agtdd05.dgn

100% PS&E

USERNAME => DWinrow DATE PLOTTED => 11 MAY 2011 TIME PLOTTED => 14:12:48