DIST.	COUNTY	ROUTE	KILOMETER POST TOTAL PROJECT	SHEET NO.	TOTAL SHEETS
04	SF	80	13.2/13.9	800S10	1204

Caltrans Metric

REGISTERED ENGINEER - CIVIL

04-22-11

PLANS APPROVAL DATE

REGISTERED PROFESSIONAL ENGINEER Marwan N. Nader No. C 054426 Exp. 12/31/11 CIVIL STATE OF CALIFORNIA

The State of California or its officers or agents shall not be responsible for the accuracy or completeness of electronic copies of this plan sheet.

T.Y. LIN / MOFFATT & NICHOL
825 BATTERY STREET
SAN FRANCISCO, CA 94111

Caltrans now has a web site! To get to the web site, go to: http://www.dot.ca.gov

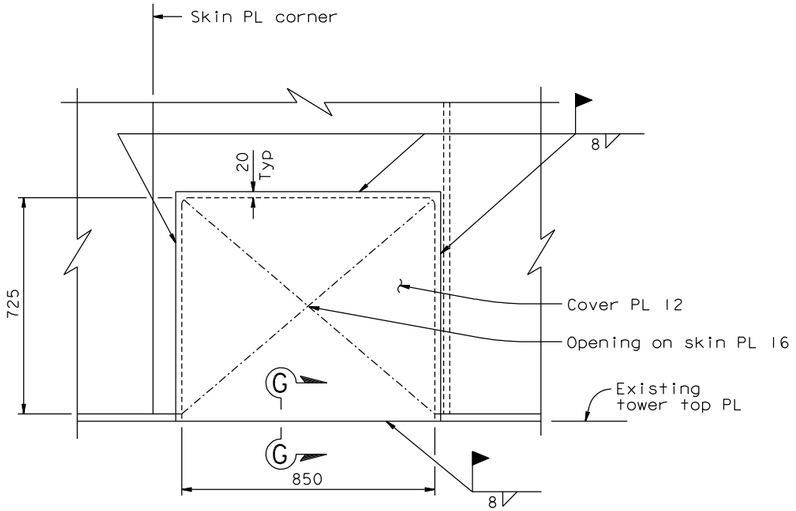

VIEW D-D
1:10

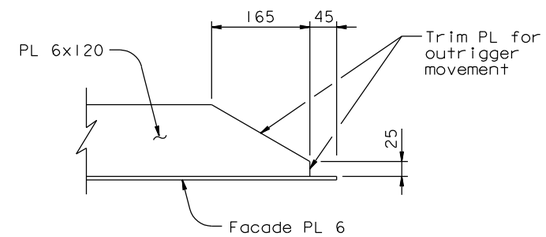

SECTION F-F
1:5

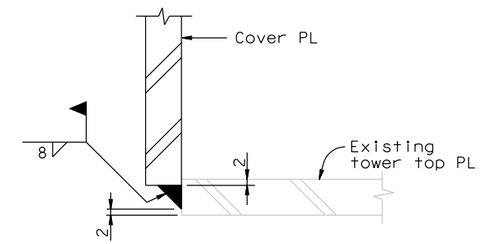

SECTION G-G (Typical for all cover plates)
1:1

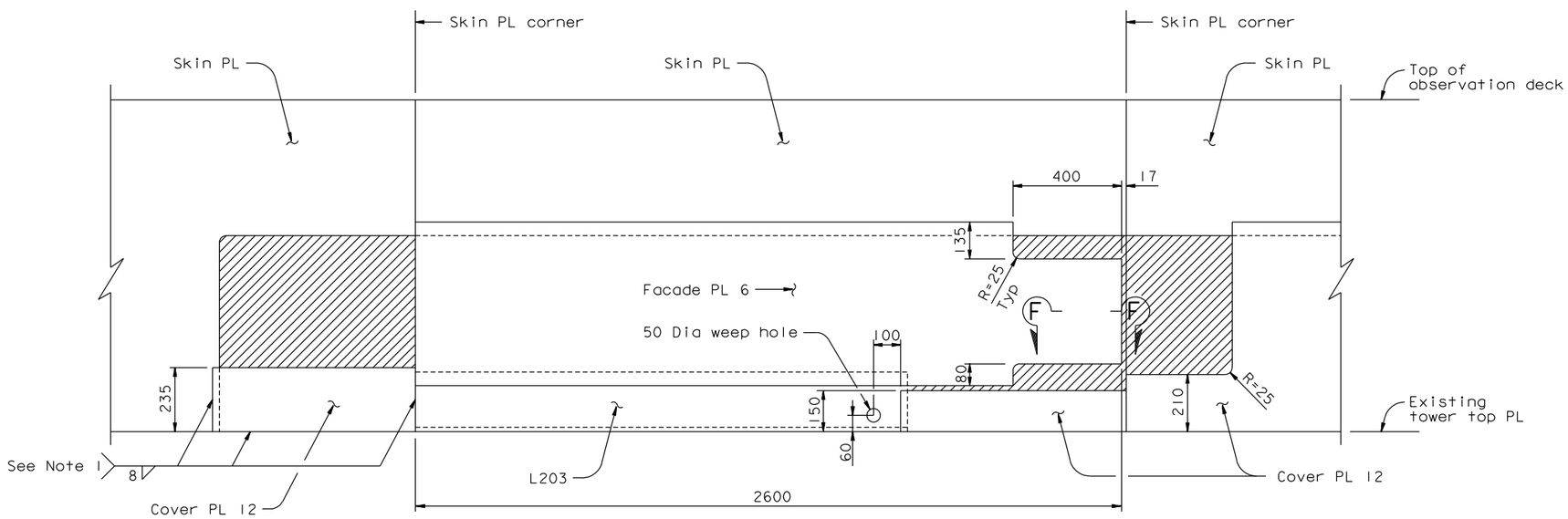

VIEW E-E (DEVELOPED) (Not all plates shown for clarity)
1:10

LEGEND:

- Opening for outrigger movement

NOTES:

1. For cover plates, any edge that is in contact with another steel element shall be fillet welded.

CONTRACT CHANGE ORDER NO. _____
SHEET ____ OF ____

REQUESTS FOR INFORMATION NOT ADDRESSED IN THIS CCO REMAIN IN FORCE

ALL DIMENSIONS ARE IN MILLIMETERS UNLESS OTHERWISE SHOWN

R. Valizadeh/V. Toan/Y.L./W.L./F.C.
DESIGN OVERSIGHT
Roya Valizadeh / Vong Toan / Y. Liu
SIGN OFF DATE 04/22/11

MARK	DATE	DESCRIPTIONS	BY	CH'D	CCO#
0	04/22/11	OBSERVATION DECK AT TOWER HEAD	NV	MN	196

REVISIONS

DESIGN	BY N. Vo	CHECKED M. Nader	
DETAILS	BY N. Vo	CHECKED A. Baumberger	
QUANTITIES	BY N. Vo	CHECKED J. Duxbury	

PREPARED FOR THE STATE OF CALIFORNIA DEPARTMENT OF TRANSPORTATION

R. Manzanarez
PROJECT ENGINEER

BRIDGE NO. 34-0006L/R
KILOMETER POST 13.2/13.9

SAN FRANCISCO OAKLAND BAY BRIDGE
EAST SPAN SEISMIC SAFETY PROJECT
SELF-ANCHORED SUSPENSION BRIDGE
(SUPERSTRUCTURE & TOWER)

TOWER OBSERVATION DECK DETAILS NO. 6

Rev. Date: 5-18-98

ORIGINAL SCALE IN MILLIMETERS FOR REDUCED PLANS 0 10 20 30 40 50 60 70 80 90 100

CU 04
EA 0120F1

DISREGARD PRINTS BEARING EARLIER REVISION DATES 04/22/11

REVISION DATES (PRELIMINARY STAGE ONLY)

SHEET 383S10 OF

FILE => I:\bb\04-012001\sas\contract plans and cco\cco\cco#196\1-original 04-22-11\dgn\agtdd06.dgn

100% PS&E

USERNAME => DWinrow DATE PLOTTED => 22 APR 2011 TIME PLOTTED => 13:21:33