DIST.	COUNTY	ROUTE	KILOMETER POST TOTAL PROJECT	SHEET NO.	TOTAL SHEETS
04	SF	80	13.2/13.9	903S2R1	1204

REGISTERED ENGINEER - CIVIL

08-10-11

PLANS APPROVAL DATE

REGISTERED PROFESSIONAL ENGINEER James P. Duxbury No. C 64677 Exp. 06/30/13 CIVIL STATE OF CALIFORNIA

The State of California or its officers or agents shall not be responsible for the accuracy or completeness of electronic copies of this plan sheet.

T.Y. LIN / MOFFATT & NICHOL
825 BATTERY STREET
SAN FRANCISCO, CA 94111

Caltrans now has a web site! To get to the web site, go to: http://www.dot.ca.gov

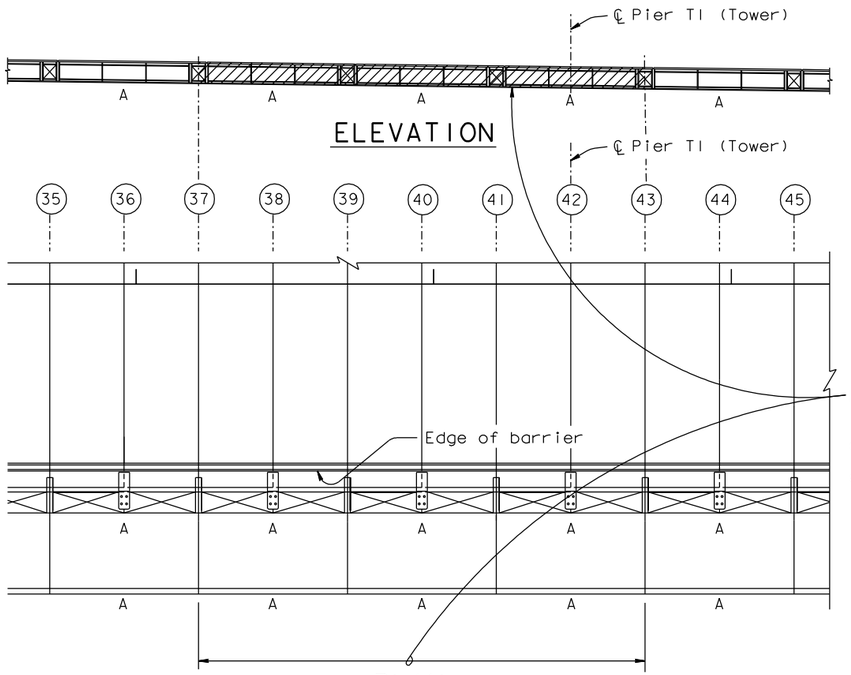

PLAN

BIKEPATH RAILING - TYP 30 M SECTION

NTS

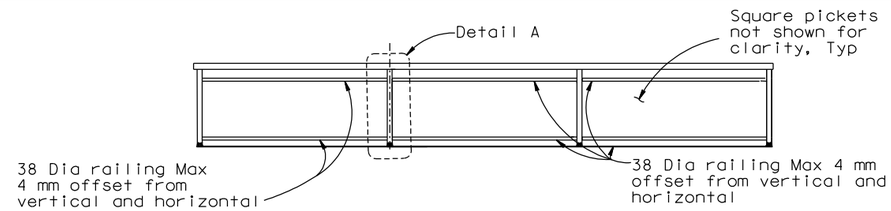

PIPE ALIGNMENT AND STRAIGHTNESS DETAIL

NTS

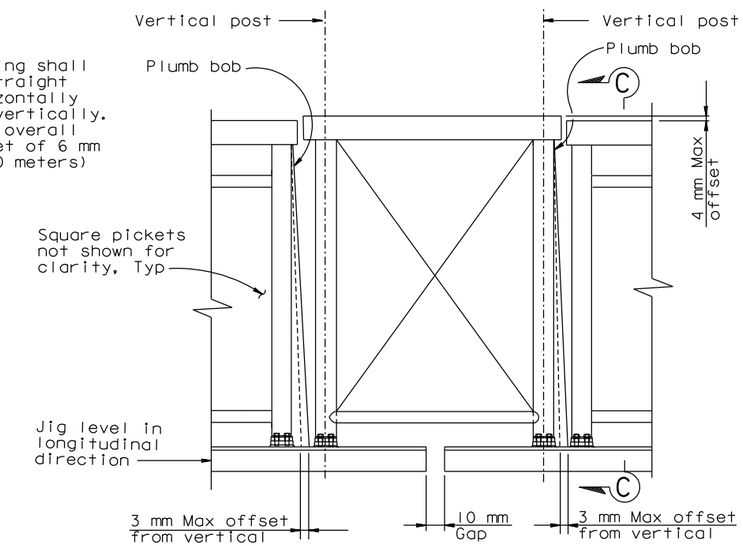

DETAIL B

NTS

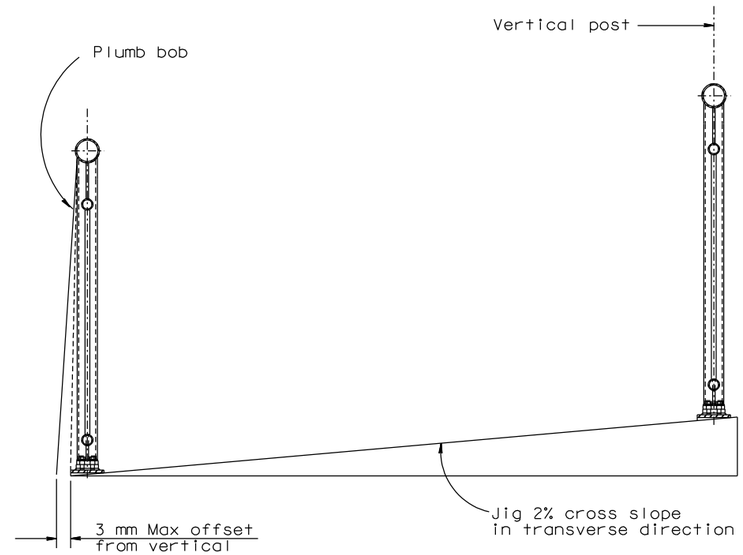

SECTION C-C

NTS

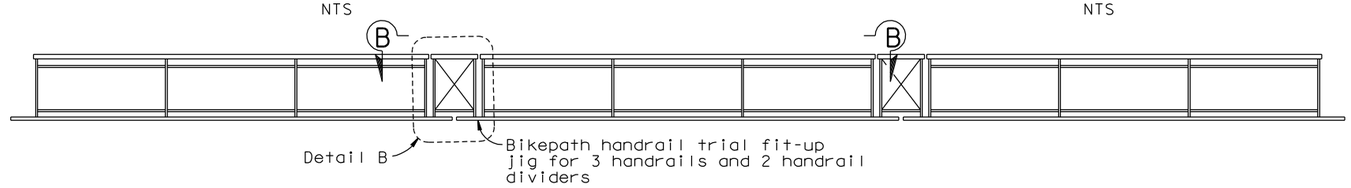

FIT-UP JIG ELEVATION

NTS

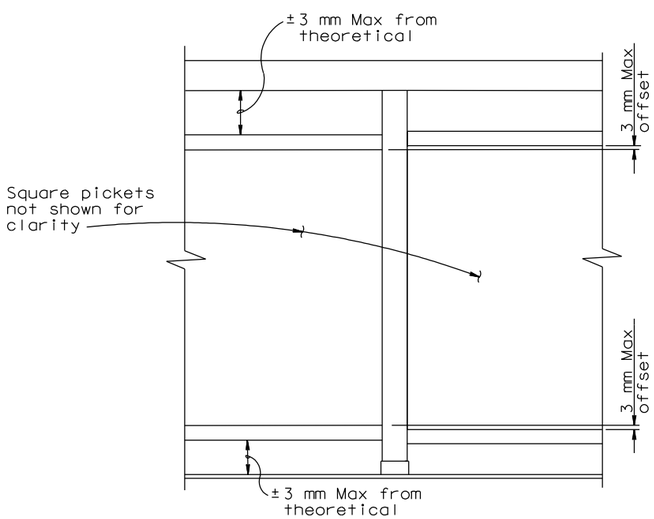

DETAIL A

NTS

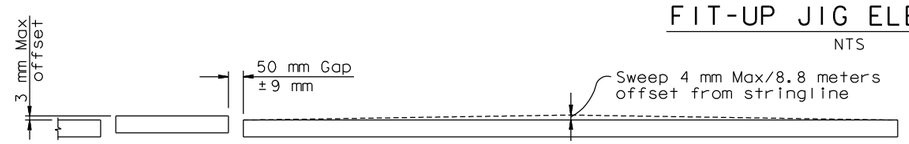

SECTION B-B

NTS

NOTES:

1. Bikepath railing tolerance measurement shown with respect to fit-up jigs for fabrication. Bikepath railing tolerance measurement shall apply with respect to Bikepath structure for field installation.

BIKEPATH RAILING FABRICATION AND INSTALLATION TOLERANCE DETAILS

CONTRACT CHANGE ORDER NO. _____
SHEET ____ OF ____

REQUESTS FOR INFORMATION NOT ADDRESSED IN THIS CCO REMAIN IN FORCE

ALL DIMENSIONS ARE IN MILLIMETERS UNLESS OTHERWISE SHOWN

R. Valizadeh/V. Toan/Y.L./W.L./F.C.
DESIGN OVERSIGHT
SIGN OFF DATE 08/01/12

MARK	DATE	DESCRIPTIONS	BY	CH'D	CCO#
1	08/01/12	BIKEPATH RAILING TOLERANCE	JD	HT	195S1
0	08/10/11	BIKEPATH RAILING TOLERANCE	JD	TH	195

REVISIONS

DESIGN	BY J. Duxbury	CHECKED T. Ho	
DETAILS	BY J. Duxbury	CHECKED T. Ho	
QUANTITIES	BY J. Duxbury	CHECKED T. Ho	

PREPARED FOR THE STATE OF CALIFORNIA DEPARTMENT OF TRANSPORTATION

R. Manzanarez
PROJECT ENGINEER

BRIDGE NO. 34-0006L/R
KILOMETER POST 13.2/13.9

SAN FRANCISCO OAKLAND BAY BRIDGE
EAST SPAN SEISMIC SAFETY PROJECT
SELF-ANCHORED SUSPENSION BRIDGE
(SUPERSTRUCTURE & TOWER)

RAILING DETAILS NO. 8

Rev. Date: 5-18-98

ORIGINAL SCALE IN MILLIMETERS FOR REDUCED PLANS 0 10 20 30 40 50 60 70 80 90 100

CU 04
EA 0120F1

DISREGARD PRINTS BEARING EARLIER REVISION DATES 08/10/11

REVISION DATES (PRELIMINARY STAGE ONLY)

SHEET 486S2R1 OF

FILE => L:\BB\04-012001\SAS\Contract Plans and CCO\CCO\CCO#195S1\1 Original 08-01-12\DGN\akrig10a.dgn

100% PS&E

USERNAME => DWinrow DATE PLOTTED => 01 AUG 2012 TIME PLOTTED => 09:21:50