DIST.	COUNTY	ROUTE	KILOMETER POST TOTAL PROJECT	SHEET NO.	TOTAL SHEETS
04	SF, Ala	80	13.9/14.3, 0.0/2.7	11645GR2	1204

REGISTERED ENGINEER - CIVIL

03-29-11
PLANS APPROVAL DATE

REGISTERED PROFESSIONAL ENGINEER Tien Hung Ha No. C 43990 Exp. 06/30/13 CIVIL STATE OF CALIFORNIA

The State of California or its officers or agents shall not be responsible for the accuracy or completeness of electronic copies of this plan sheet.

T.Y. LIN / MOFFATT & NICHOL
TWO HARRISON STREET
SAN FRANCISCO, CA 94105

Caltrans now has a web site! To get to the web site, go to: Http://www.dot.ca.gov

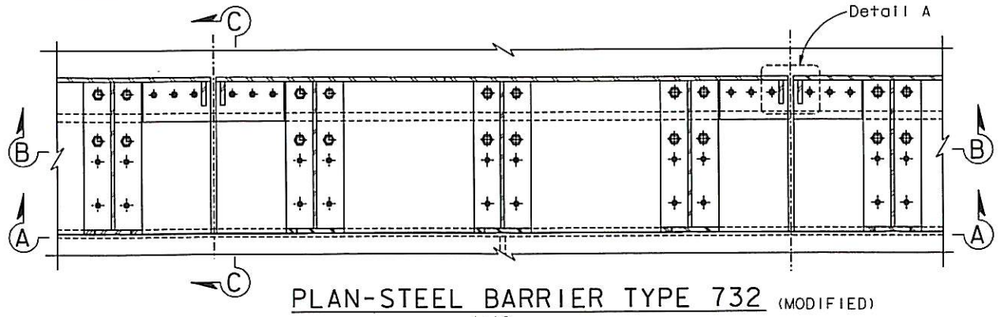

PLAN-STEEL BARRIER TYPE 732 (MODIFIED)
1:10

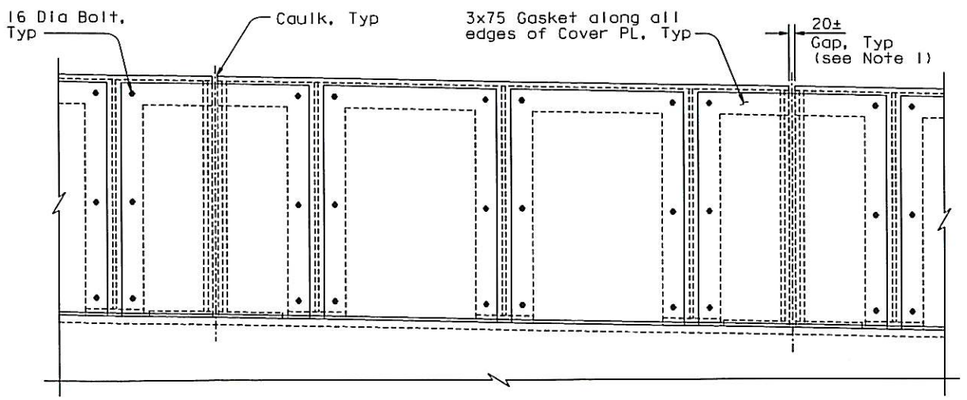

SECTION A-A
1:10

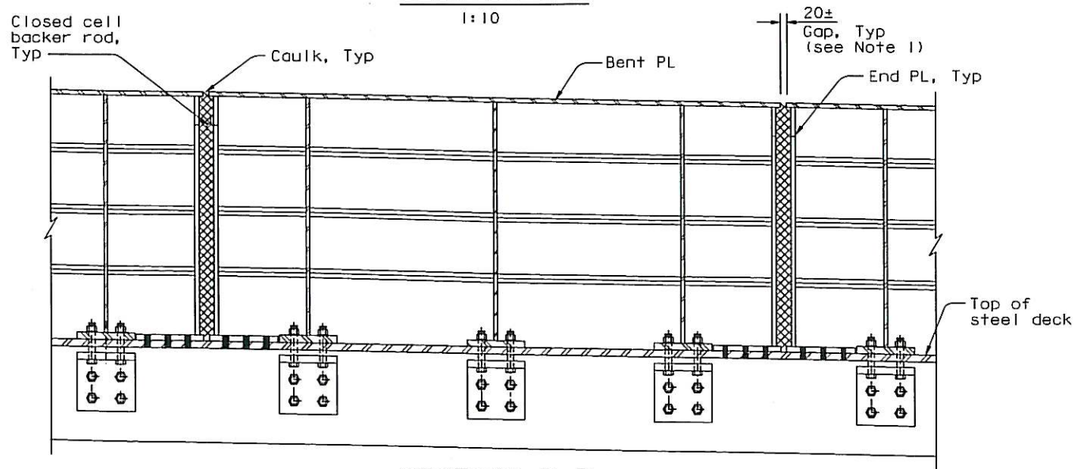

SECTION B-B
1:10

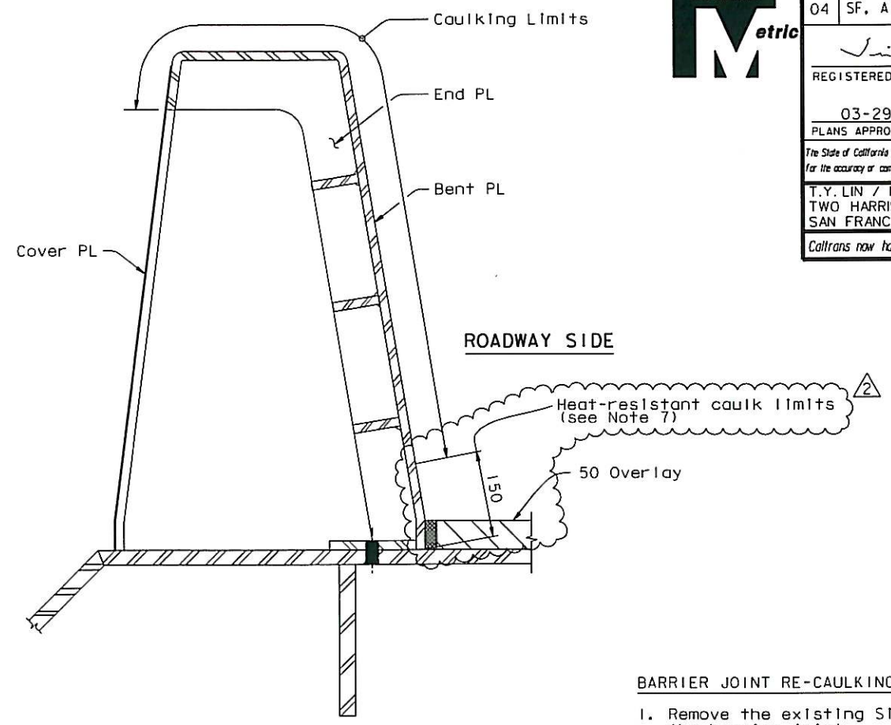

SECTION C-C
1:5

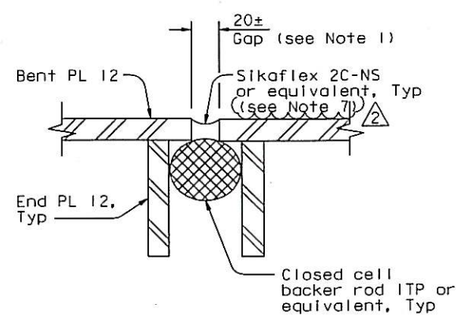

DETAIL A
1:1

BARRIER JOINT RE-CAULKING PROCEDURE:

1. Remove the existing Sika Combiflex material from the barrier joint.
2. Clean and paint the exterior face of the Bent PL in the vicinity of the barrier joint. Clean and prime paint the edges of the Bent PL per manufacturer's recommendations.
3. Before installing the closed cell backer rod, clean the prime coated edges of the Bent PL with Xylene or Toluene, or as otherwise instructed by the manufacturer. Do not use Alcohol or MEK.
4. Install the closed cell backer rod (ITP Standard Backer Rod or equivalent). The backer rod material shall fit tightly between the End PL, leaving a 12mm deep x 20mm wide space for the caulk.
5. Caulk (Sikaflex 2C-NS or equivalent) the barrier joint and finish to a concave shape or as otherwise instructed by the manufacturer and approved by the Engineer.
6. Caulk shall match the bridge paint color, or as otherwise approved by the Engineer.
7. (2) Heat-resistant caulk (Dow Corning 732 or equivalent) shall be installed at the bottom 150 mm on the roadway side of the steel barrier vertical joints.

NOTES:

1. The Contractor shall field verify dimensions prior to fabrication.

REQUESTS FOR INFORMATION NOT ADDRESSED IN THIS CCO REMAIN IN FORCE

MARK	DATE	DESCRIPTIONS	BY	CH'D	CCO#
2	04/17/13	SKYWAY STEEL BARRIER JOINT	TH	JD	194S1
1	05/25/11	SKYWAY STEEL BARRIER JOINT	TH	JD	194
0	03/29/11	SKYWAY STEEL BARRIER JOINT	TH	JD	194

REVISIONS

CONTRACT CHANGE ORDER NO. 194S1
SHEET 2 OF 2

ALL DIMENSIONS ARE IN MILLIMETERS UNLESS OTHERWISE SHOWN

	BY	CHECKED
DESIGN	T. Ho	J. Duxbury
DETAILS	T. Ho	J. Duxbury
QUANTITIES	T. Ho	J. Duxbury

PREPARED FOR THE STATE OF CALIFORNIA DEPARTMENT OF TRANSPORTATION

R. Manzanarez
PROJECT ENGINEER

BRIDGE NO. 34-0006L/R
KILOMETER POST 13.9/14.3, 0.0/2.7

W. Long, Y. Liu
DESIGN OVERSIGHT
SIGN OFF DATE 04/17/13

Rev. Date: 5-18-98

ORIGINAL SCALE IN MILLIMETERS FOR REDUCED PLANS 0 10 20 30 40 50 60 70 80 90 100

CU 04
EA 0120F1

DISREGARD PRINTS BEARING EARLIER REVISION DATES 03/29/11

REVISION DATES (PRELIMINARY STAGE ONLY)

SHEET 74756R2 OF

SAN FRANCISCO OAKLAND BAY BRIDGE
EAST SPAN SEISMIC SAFETY PROJECT

SKYWAY CLEANUP ITEMS

SKYWAY STEEL BARRIER JOINT

FILE => I:\bb\04-012001\sas\contract plans and cco\cco\cco#194s1\2-update 04-17-13\dgn\akctd03f.dgn

USERNAME => arivera DATE PLOTTED => 17 APR 2013 TIME PLOTTED => 09:21:13

100% PS&E