DIST.	COUNTY	ROUTE	KILOMETER POST TOTAL PROJECT	SHEET NO.	TOTAL SHEETS
04	SF	80	13.2/13.9	1164S9	1204

REGISTERED ENGINEER - CIVIL

04-15-11
PLANS APPROVAL DATE

The State of California or its officers or agents shall not be responsible for the accuracy or completeness of electronic copies of this plan sheet.

REGISTERED PROFESSIONAL ENGINEER Alex E. Sanjines No. C 051153 Exp. 9/30/11 CIVIL STATE OF CALIFORNIA

T.Y. LIN / MOFFATT & NICHOL
825 BATTERY STREET
SAN FRANCISCO, CA 94111

Caltrans now has a web site! To get to the web site, go to: http://www.dot.ca.gov

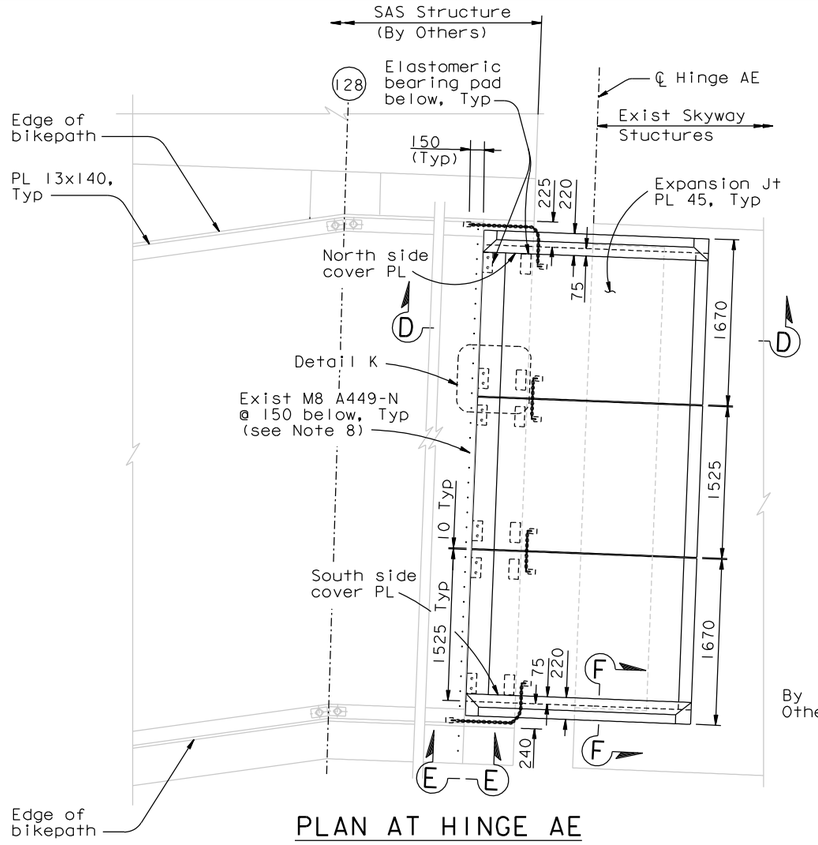

PLAN AT HINGE AE

1:30

(Internal stiffening and cover PL not shown for clarity)

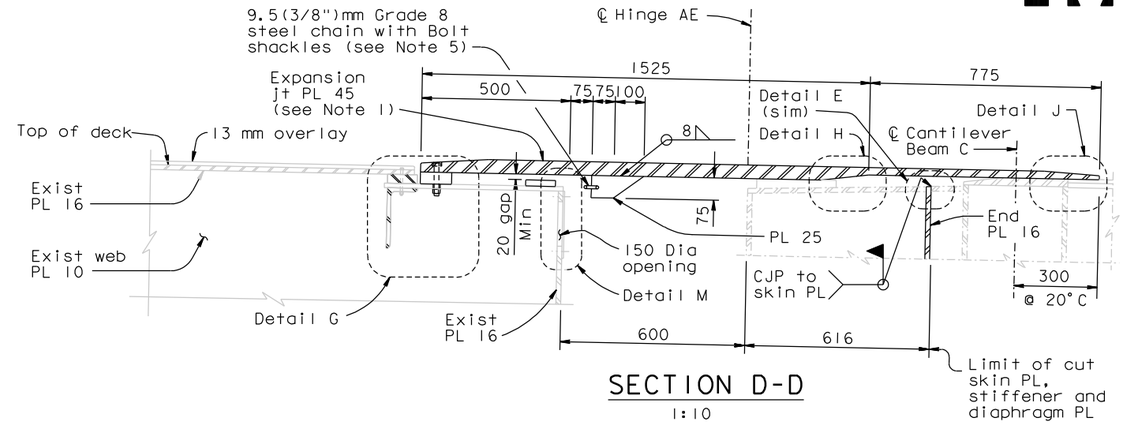

SECTION D-D

1:10

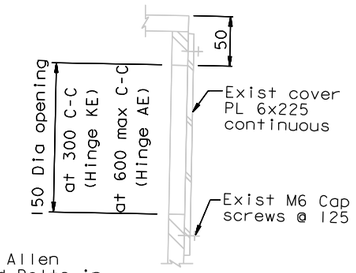

DETAIL M

1:3

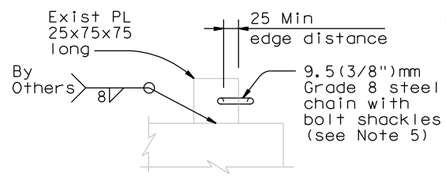

SECTION E-E

1:5

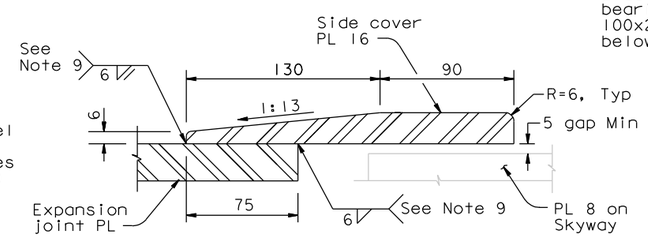

SECTION F-F

1:2

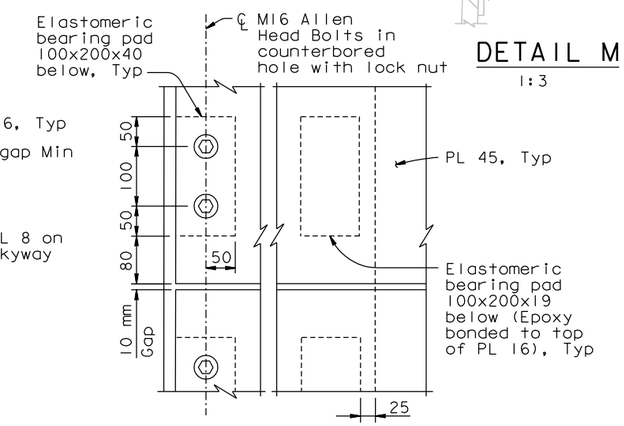

DETAIL K

1:5

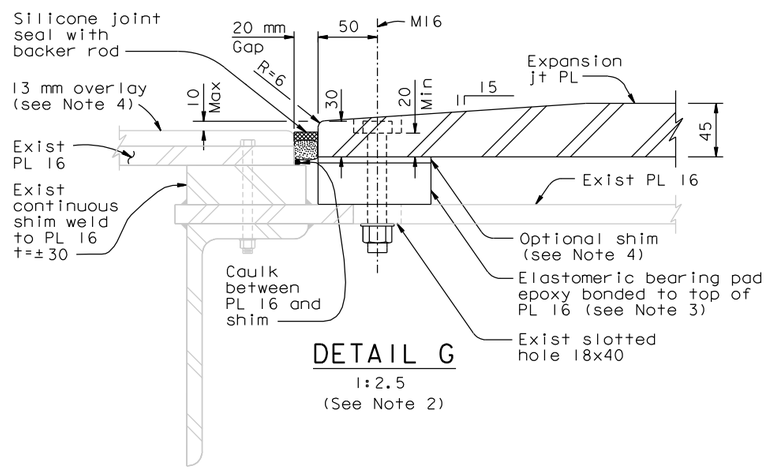

DETAIL G

1:2.5

(See Note 2)

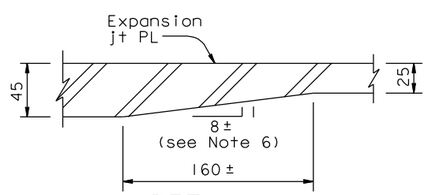

DETAIL H

1:2.5

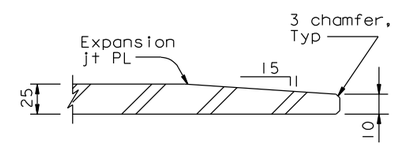

DETAIL J

1:2.5

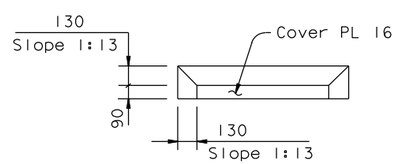

COVER PLATES LAYOUT

1:20 (South side shown, North side similar)

NOTES:

1. Top surface of exposed plates shall have non-skid coating.
2. For details not shown, see SAS-"Bikepath Details" sheets.
3. Pre-compress elastomeric pad by 2 mm by means of 1 turn of M16 bolt.
4. Thickness of shim and overlay may vary to provide tolerance to adjust for As-Built Skyway.
5. Chains and shackles should be hot-dipped galvanized and have a working capacity of 27kN. Chain drape shall not exceed 50 mm.
6. Slope shall match the slope of exist top PL of Cantilever Beam C.
7. The Contractor shall verify all the dimensions in field before fabricating the expansion joint plate. All the plates cut shall be ground square.
8. Bolts shall be installed with threads including in the shear plane.
9. Terminate the weld 12 mm short of the expansion joint PL taper at the bolted end. Caulk the space between the cover PL and the expansion joint PL at the tapered end of the expansion joint PL.
10. For detail E, see "Skyway Bikepath Expansion Joint Replacement No.1" sheet.

CONTRACT CHANGE ORDER NO. _____
SHEET ____ OF ____

REQUESTS FOR INFORMATION NOT ADDRESSED IN THIS CCO REMAIN IN FORCE

ALL DIMENSIONS ARE IN MILLIMETERS UNLESS OTHERWISE SHOWN

R. Valizadeh/V. Toan/Y.L./W.L./F.C.
DESIGN OVERSIGHT
SIGN OFF DATE 04/15/11

MARK	DATE	DESCRIPTIONS	BY	CH'D	CCO#
0	04/15/11	SKYWAY BIKEPATH EXPANSION JOINT	AS	HP	193

REVISIONS

DESIGN	BY A. Sanjines	CHECKED H. Patel	
DETAILS	BY A. Sanjines	CHECKED H. Patel	
QUANTITIES	BY A. Sanjines	CHECKED H. Patel	

PREPARED FOR THE STATE OF CALIFORNIA DEPARTMENT OF TRANSPORTATION

R. Manzanarez
PROJECT ENGINEER

BRIDGE NO. 34-0006L/R
KILOMETER POST 13.2/13.9

SAN FRANCISCO OAKLAND BAY BRIDGE
EAST SPAN SEISMIC SAFETY PROJECT
SELF-ANCHORED SUSPENSION BRIDGE
(SUPERSTRUCTURE & TOWER)

SKYWAY BIKEPATH EXPANSION JOINT REPLACEMENT NO. 3

Rev. Date: 5-18-98

ORIGINAL SCALE IN MILLIMETERS FOR REDUCED PLANS 0 10 20 30 40 50 60 70 80 90 100

CU 04
EA 0120F1

DISREGARD PRINTS BEARING EARLIER REVISION DATES 04/15/11

REVISION DATES (PRELIMINARY STAGE ONLY)

SHEET 747S9 OF

FILE => I:\bb\04-012001\sas\contract plans and cco\cco\cco#193\1-original 04-15-11\dgn\sbjnt03.dgn

100 % PS&E

USERNAME => DWinrow DATE PLOTTED => 15 APR 2011 TIME PLOTTED => 10:20:42