DIST.	COUNTY	ROUTE	KILOMETER POST TOTAL PROJECT	SHEET NO.	TOTAL SHEETS
04	SF	80	13.2/13.9	116458	1204

REGISTERED ENGINEER - CIVIL

04-15-11
PLANS APPROVAL DATE

The State of California or its officers or agents shall not be responsible for the accuracy or completeness of electronic copies of this plan sheet.

REGISTERED PROFESSIONAL ENGINEER Alex E. Sanjines No. C 051153 Exp. 9/30/11 CIVIL STATE OF CALIFORNIA

T.Y. LIN / MOFFATT & NICHOL
825 BATTERY STREET
SAN FRANCISCO, CA 94111

Caltrans now has a web site! To get to the web site, go to: http://www.dot.ca.gov

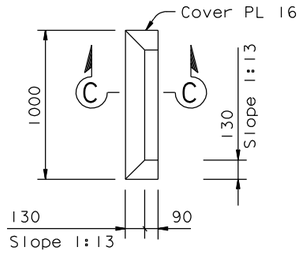

DETAIL F
1:20

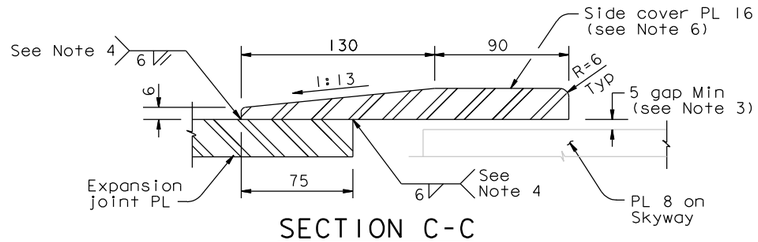

SECTION C-C
1:2

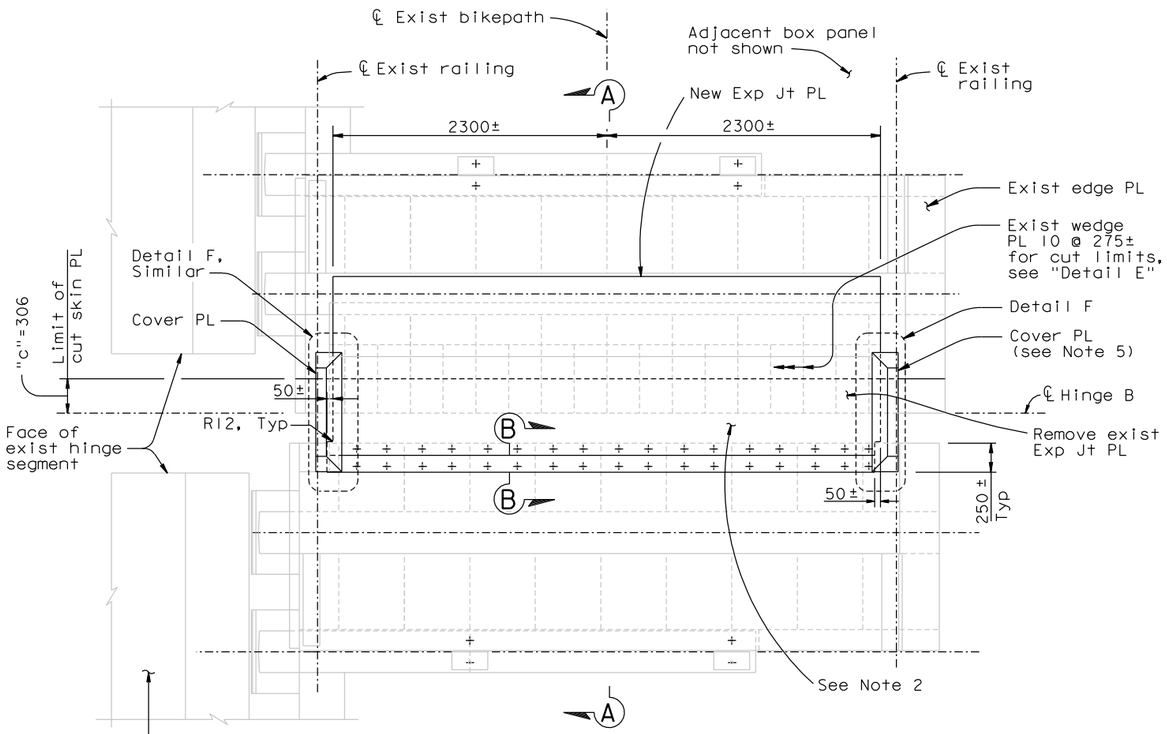

PLAN (Box panel at Expansion Joint - Hinge B)
1:25

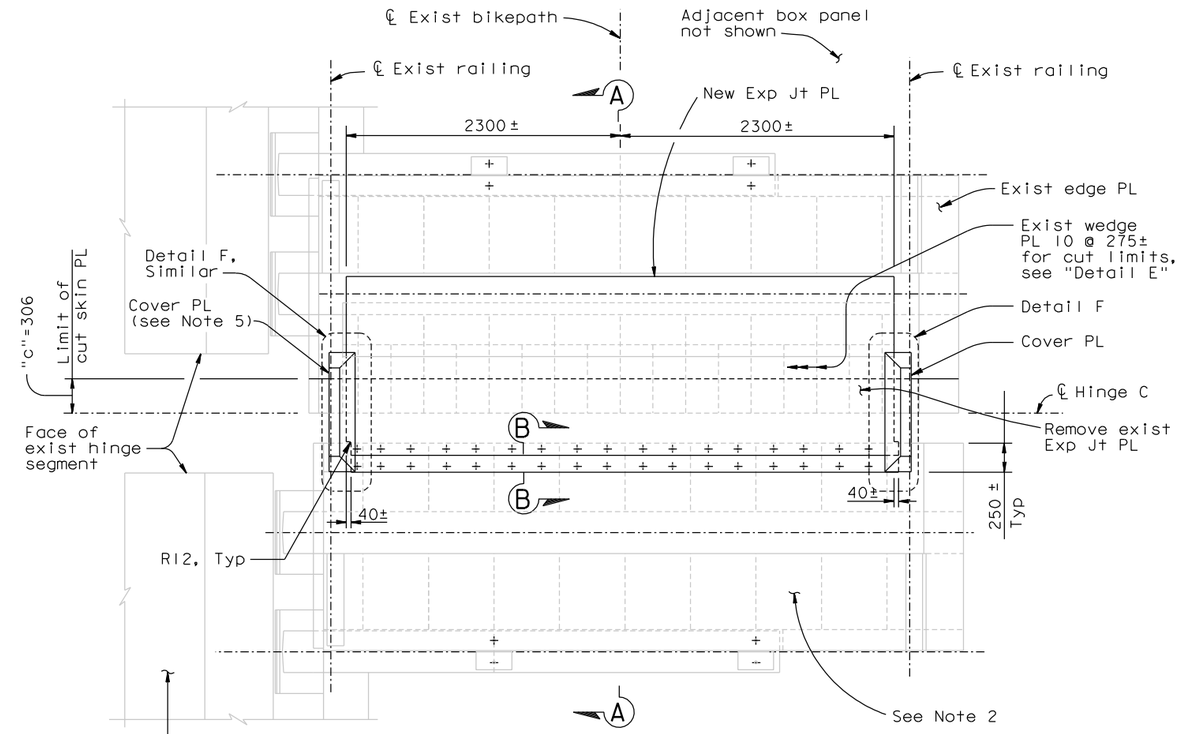

PLAN (Box panel at Expansion Joint - Hinge C)
1:25

NOTES:

1. For Sections A-A and B-B, see "Skyway Bikepath Expansion Joint Replacement No.1" sheet.
2. For details not shown, see Plan (Box panel at Expansion Joint - Hinge D) on "Skyway Bikepath Expansion Joint Replacement No.1" sheet.
3. Cover PL may be shimmed to maintain Min gap shown.
4. Terminate the weld 12 mm short of the expansion joint PL taper at the bolted end. Caulk the space between the cover PL and the expansion joint PL at the tapered end of the expansion joint PL. At the Contractor's option, the weld between expansion joint PL and cover PL may be field weld.
5. Trim the cover PL as necessary to clear the expansion joint PL bolted connection.
6. Top surface of the exposed plates shall have non-skid coating.

CONTRACT CHANGE ORDER NO. _____
SHEET ___ OF ___

REQUESTS FOR INFORMATION NOT ADDRESSED IN THIS CCO REMAIN IN FORCE

ALL DIMENSIONS ARE IN MILLIMETERS UNLESS OTHERWISE SHOWN

R. Valizadeh/V. Toan/Y.L./W.L./F.C.
DESIGN OVERSIGHT
Roya Valizadeh / Vong P. Toan / Y. Liu
SIGN OFF DATE 04/15/11

MARK	DATE	DESCRIPTIONS	BY	CH'D	CCO#
0	04/15/11	SKYWAY BIKEPATH EXPANSION JOINT	AS	HP	193

REVISIONS

	BY	CHECKED
DESIGN	A. Sanjines	H. Patel
DETAILS	A. Sanjines	H. Patel
QUANTITIES	A. Sanjines	H. Patel

PREPARED FOR THE STATE OF CALIFORNIA DEPARTMENT OF TRANSPORTATION

R. Manzanarez
PROJECT ENGINEER

BRIDGE NO. 34-0006L/R
KILOMETER POST 13.2/13.9

SAN FRANCISCO OAKLAND BAY BRIDGE
EAST SPAN SEISMIC SAFETY PROJECT
SELF-ANCHORED SUSPENSION BRIDGE
(SUPERSTRUCTURE & TOWER)

SKYWAY BIKEPATH EXPANSION JOINT REPLACEMENT NO.2

Rev. Date: 5-18-98

ORIGINAL SCALE IN MILLIMETERS FOR REDUCED PLANS 0 10 20 30 40 50 60 70 80 90 100

CU 04
EA 0120F1

DISREGARD PRINTS BEARING EARLIER REVISION DATES → 04/15/11

REVISION DATES (PRELIMINARY STAGE ONLY)

SHEET 747S8 OF

FILE => I:\bb\04-012001\sas\contract plans and cco\cco\cco#193\1-original 04-15-11\dgn\sbjnt02.dgn

100% PS&E

USERNAME => DWinrow DATE PLOTTED => 15 APR 2011 TIME PLOTTED => 10:20:03