DIST.	COUNTY	ROUTE	KILOMETER POST TOTAL PROJECT	SHEET NO.	TOTAL SHEETS
04	SF	80	13.2/13.9	1164S7	1204

REGISTERED ENGINEER - CIVIL

04-15-11
PLANS APPROVAL DATE

REGISTERED PROFESSIONAL ENGINEER Alex E. Sanjines No. C 051153 Exp. 9/30/11 CIVIL STATE OF CALIFORNIA

The State of California or its officers or agents shall not be responsible for the accuracy or completeness of electronic copies of this plan sheet.

T.Y. LIN / MOFFATT & NICHOL
825 BATTERY STREET
SAN FRANCISCO, CA 94111

Caltrans now has a web site! To get to the web site, go to: http://www.dot.ca.gov

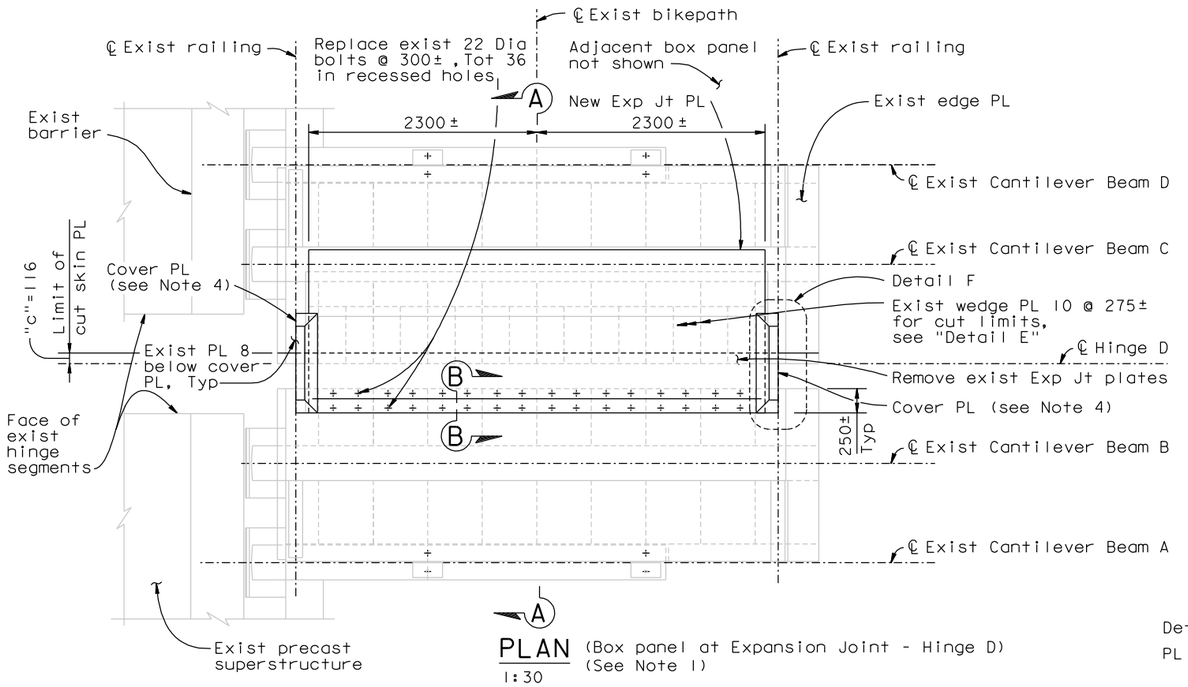

PLAN (Box panel at Expansion Joint - Hinge D) (See Note 1)
1:30

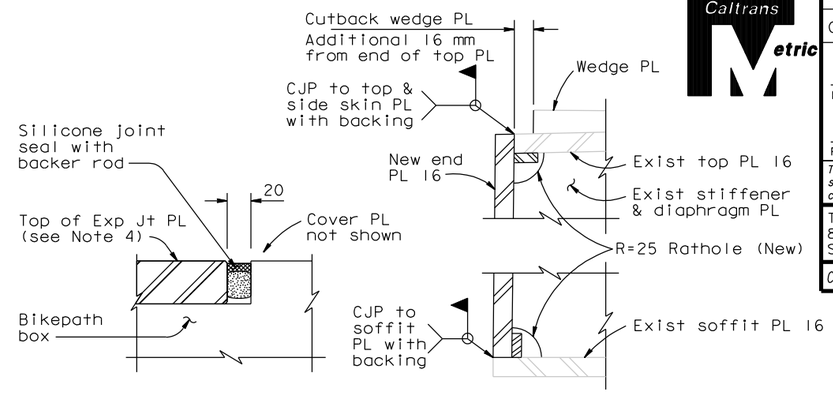

SECTION B-B
1:2.5

DETAIL E
1:2.5

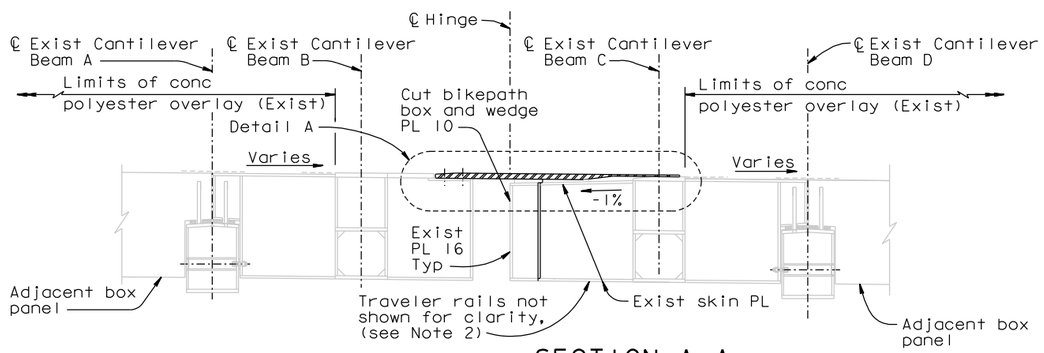

SECTION A-A
1:20

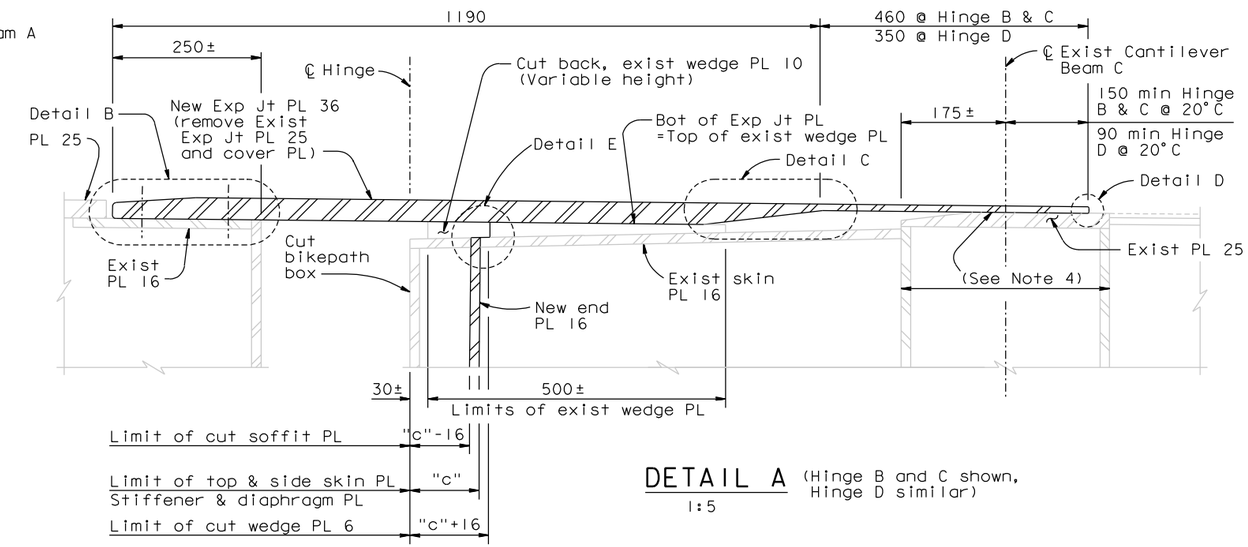

DETAIL A (Hinge B and C shown, Hinge D similar)
1:5

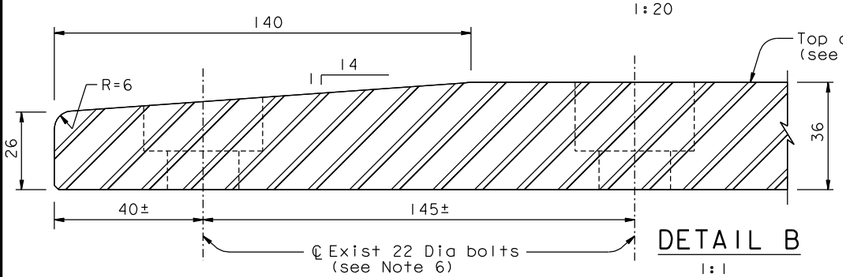

DETAIL B
1:1

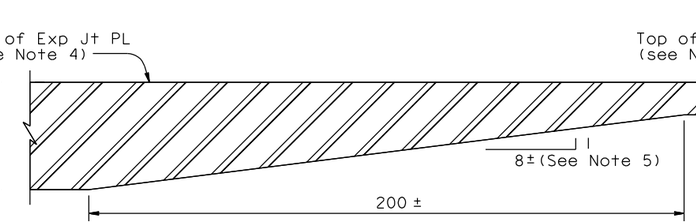

DETAIL C
1:1

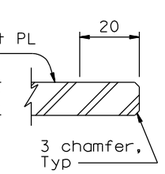

DETAIL D
1:1

NOTES:

1. For Hinge B, C and Detail F, see "Skyway Bikepath Expansion Joint Replacement No.2" sheet. For Hinge A, see "Skyway Bikepath Expansion Joint Replacement No.3" sheet.
2. For traveler rail modifications, see "Skyway Bikepath Expansion Joint Replacement No.4" sheet.
3. The Contractor shall verify all the dimensions in field before fabricating the expansion joint plate.
4. Top surface of exposed plates shall have non-skid coating.
5. Slope shall match the slope of exist top PL 25 of Cantilever Beam C.
6. Location and dimension of the countersunk holes shall be verified to match with exist holes in exist PL 16 and exist expansion joint plate. All the plates cut shall be ground square.

CONTRACT CHANGE ORDER NO. ____
SHEET ___ OF ___

REQUESTS FOR INFORMATION NOT ADDRESSED IN THIS CCO REMAIN IN FORCE

ALL DIMENSIONS ARE IN MILLIMETERS UNLESS OTHERWISE SHOWN

R. Valizadeh/V. Toan/Y.L./W.L./F.C.
DESIGN OVERSIGHT
Roya Valizadeh / Vong Toan / Y. Liu
SIGN OFF DATE 04/15/11

MARK	DATE	DESCRIPTIONS	BY	CH'D	CCO#
0	04/15/11	SKYWAY BIKEPATH EXPANSION JOINT	AS	HP	193

REVISIONS

	BY	CHECKED
DESIGN	A. Sanjines	H. Patel
DETAILS	A. Sanjines	H. Patel
QUANTITIES	A. Sanjines	H. Patel

PREPARED FOR THE STATE OF CALIFORNIA DEPARTMENT OF TRANSPORTATION

R. Manzanarez
PROJECT ENGINEER

BRIDGE NO. 34-0006L/R
KILOMETER POST 13.2/13.9

SAN FRANCISCO OAKLAND BAY BRIDGE
EAST SPAN SEISMIC SAFETY PROJECT
SELF-ANCHORED SUSPENSION BRIDGE
(SUPERSTRUCTURE & TOWER)

SKYWAY BIKEPATH EXPANSION JOINT REPLACEMENT NO.1

Rev. Date: 5-18-98

ORIGINAL SCALE IN MILLIMETERS FOR REDUCED PLANS 0 10 20 30 40 50 60 70 80 90 100

CU 04
EA 0120F1

DISREGARD PRINTS BEARING EARLIER REVISION DATES 04/15/11

REVISION DATES (PRELIMINARY STAGE ONLY)

SHEET 747S7 OF

FILE => I:\bb\04-012001\sas\contract plans and cco\cco\cco#193\1-original 04-15-11\dgn\sbjnt01.dgn

USERNAME => DWinrow DATE PLOTTED => 15 APR 2011 TIME PLOTTED => 10:17:45

100% PS&E