DIST.	COUNTY	ROUTE	KILOMETER POST TOTAL PROJECT	SHEET NO.	TOTAL SHEETS
04	SF	80	13.2/13.9	839R3	1204

REGISTERED ENGINEER - CIVIL

12-6-04

PLANS APPROVAL DATE

REGISTERED PROFESSIONAL ENGINEER Tien Hung Ho No. C 43990 Exp. 6/30/11 CIVIL STATE OF CALIFORNIA

The State of California or its officers or agents shall not be responsible for the accuracy or completeness of electronic copies of this plan sheet.

T.Y. LIN / MOFFATT & NICHOL
825 BATTERY STREET
SAN FRANCISCO, CA 94111

Caltrans now has a web site! To get to the web site, go to: http://www.dot.ca.gov

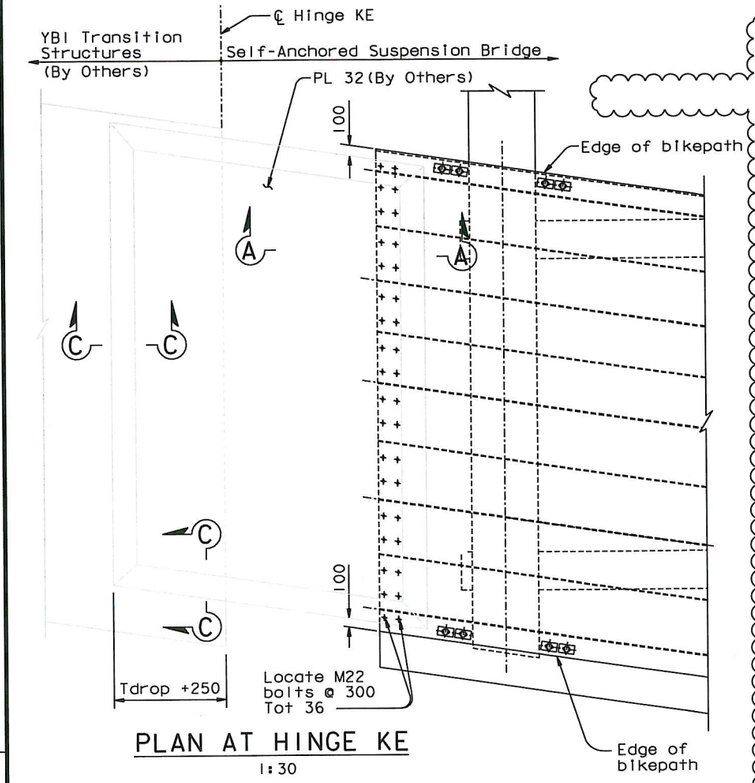

PLAN AT HINGE KE
1:30

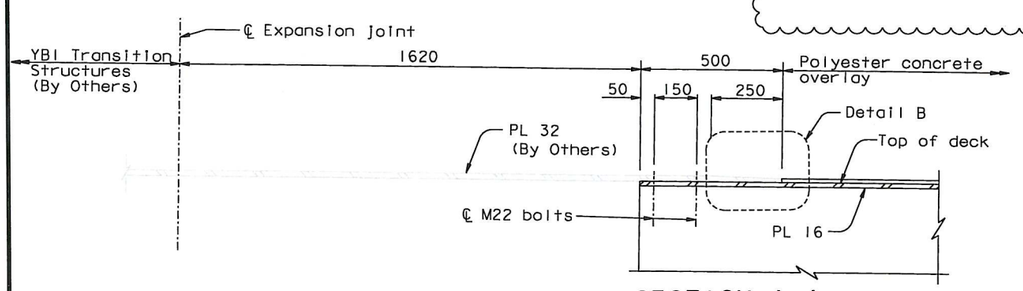

SECTION A-A
1:10

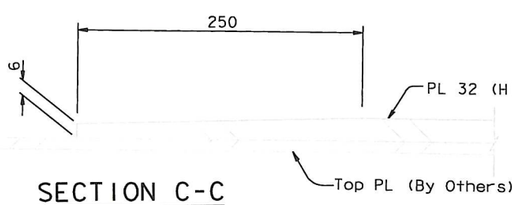

SECTION C-C
1:2.5

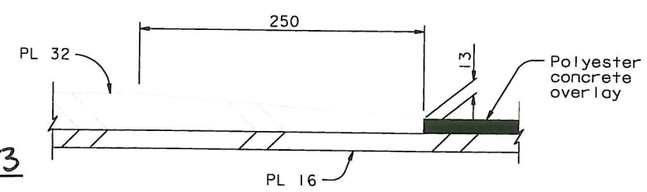

DETAIL B
1:2.5

NOTES:

1. Top surface of exposed plates shall have non-skid coating.
2. For Tdrop dimension, see "Hinge K Expansion Joint Details" and "Hinge A Expansion Joint Details" sheets.

CONTRACT CHANGE ORDER NO. 193
SHEET 2 OF 7

REQUESTS FOR INFORMATION NOT ADDRESSED IN THIS CCO REMAIN IN FORCE

MARK	DATE	DESCRIPTIONS	BY	CH'D	CCO#
3	04/15/11	SKYWAY BIKEPATH EXPANSION JOINT	AS	TH	193
2	03/04/11	BIKEPATH DETAILS	CC	TH	99
1	08/20/10	BIKEPATH DETAILS	CC	TH	99

REVISIONS

ALL DIMENSIONS ARE IN MILLIMETERS UNLESS OTHERWISE SHOWN

R. Vallizadeh/V. Toan/Y.L./W.L./F.C.
DESIGN OVERSIGHT
SIGN OFF DATE 04/15/11

DESIGN	BY T. Ho	CHECKED T. McMeans	
DETAILS	BY R. Xu	CHECKED P. Ritchie	
QUANTITIES	BY C. Bernardo	CHECKED S. Shi	

PREPARED FOR THE STATE OF CALIFORNIA DEPARTMENT OF TRANSPORTATION

R. Manzanarez
PROJECT ENGINEER

BRIDGE NO. 34-0006L/R
KILOMETER POST 13.2/13.9

SAN FRANCISCO OAKLAND BAY BRIDGE
EAST SPAN SEISMIC SAFETY PROJECT
SELF-ANCHORED SUSPENSION BRIDGE
(SUPERSTRUCTURE & TOWER)

BIKEPATH DETAILS NO. 15

Rev. Date: 5-18-98

ORIGINAL SCALE IN MILLIMETERS FOR REDUCED PLANS 0 10 20 30 40 50 60 70 80 90 100

CU 04
EA 0120F1

DISREGARD PRINTS BEARING EARLIER REVISION DATES 05/31/01 04/08/02 07/01/02 12/19/02

REVISION DATES (PRELIMINARY STAGE ONLY)

SHEET 422R3 OF

100 % PS&E

USERNAME => DWinrow DATE PLOTTED => 15 APR 2011 TIME PLOTTED => 10:14:45

FILE => I:\bb\04-0120F1\sas\contract plans and cco\cco\cco#193\1-original 04-15-11\dgn\agbwd15.dgn

DIST.	COUNTY	ROUTE	KILOMETER POST TOTAL PROJECT	SHEET NO.	TOTAL SHEETS
04	SF	80	13.2/13.9	839SIR2	1204

REGISTERED ENGINEER - CIVIL

08-20-10

PLANS APPROVAL DATE

REGISTERED PROFESSIONAL ENGINEER
Marwan N. Nader
No. C 054426
Exp. 12/31/11
CIVIL
STATE OF CALIFORNIA

The State of California or its officers or agents shall not be responsible for the accuracy or completeness of electronic copies of this plan sheet.

T.Y. LIN / MOFFATT & NICHOL
825 BATTERY STREET
SAN FRANCISCO, CA 94111

Caltrans now has a web site! To get to the web site, go to: http://www.dot.ca.gov

Caltrans Metric

△2 This Sheet Intentionally Left Blank.

100 % PS&E

USERNAME => DWinrow DATE PLOTTED => 15 APR 2011 TIME PLOTTED => 10:16:21

CONTRACT CHANGE ORDER NO. 193
SHEET 3 OF 7

REQUESTS FOR INFORMATION NOT ADDRESSED IN THIS CCO REMAIN IN FORCE

MARK	DATE	DESCRIPTIONS	BY	CH'D	CCO#
△2	04/15/11	SKYWAY BIKEPATH EXPANSION JOINT	AS	MN	193
△1	03/04/11	BIKEPATH DETAILS	CC	MN	99
△0	08/20/10	BIKEPATH DETAILS	CC	TH	99

REVISIONS

R. Vallizadeh/V. Toan/Y.L./W.L./F.C.
DESIGN OVERSIGHT
Roya Vallizadeh / Vong Toan / Y. Liu
SIGN OFF DATE 04/15/11

Rev. Date: 5-18-98

DESIGN	BY G. Baker	CHECKED T. Ho	
DETAILS	BY C. Chol	CHECKED M. Benolt	
QUANTITIES	BY C. Chol	CHECKED M. Benolt	

PREPARED FOR THE STATE OF CALIFORNIA DEPARTMENT OF TRANSPORTATION

R. Manzanarez
PROJECT ENGINEER

ALL DIMENSIONS ARE IN MILLIMETERS UNLESS OTHERWISE SHOWN

ORIGINAL SCALE IN MILLIMETERS FOR REDUCED PLANS 0 10 20 30 40 50 60 70 80 90 100

CU 04
EA 0120F1

BRIDGE NO. 34-0006L/R
KILOMETER POST 13.2/13.9

DISREGARD PRINTS BEARING EARLIER REVISION DATES → 08/20/10

REVISION DATES (PRELIMINARY STAGE ONLY)

SHEET 422SIR2 OF

SAN FRANCISCO OAKLAND BAY BRIDGE
EAST SPAN SEISMIC SAFETY PROJECT
SELF-ANCHORED SUSPENSION BRIDGE
(SUPERSTRUCTURE & TOWER)

BIKEPATH DETAILS NO. 15A

FILE => I:\bb\04-01200I\sas\contract plans and cco\cco\cco#193\I-original 04-15-11\dgn\agbwd15a.dgn

DIST.	COUNTY	ROUTE	KILOMETER POST TOTAL PROJECT	SHEET NO.	TOTAL SHEETS
04	SF	80	13.2/13.9	116457	1204

REGISTERED ENGINEER - CIVIL

04-15-11

PLANS APPROVAL DATE

REGISTERED PROFESSIONAL ENGINEER Alex E. Sanjines No. C 051153 Exp. 9/30/11 CIVIL STATE OF CALIFORNIA

The State of California or its officers or agents shall not be responsible for the accuracy or completeness of electronic copies of this plan sheet.

T.Y. LIN / MOFFATT & NICHOL
825 BATTERY STREET
SAN FRANCISCO, CA 94111

Caltrans now has a web site! To get to the web site, go to: http://www.dot.ca.gov

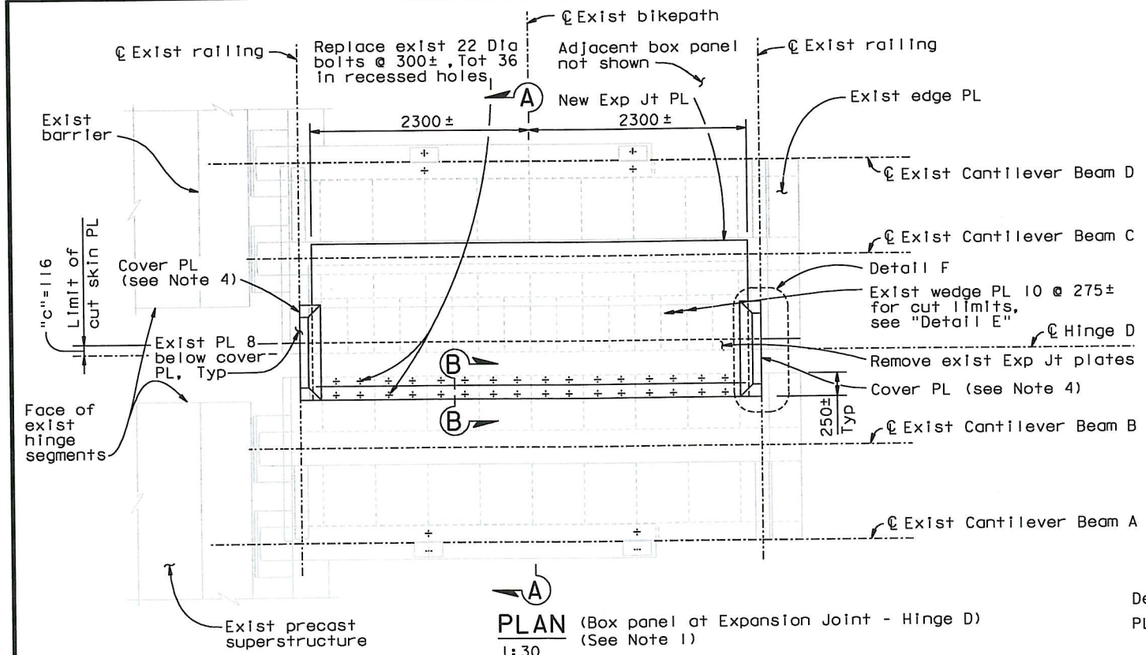

PLAN (Box panel at Expansion Joint - Hinge D) (See Note 1)
1:30

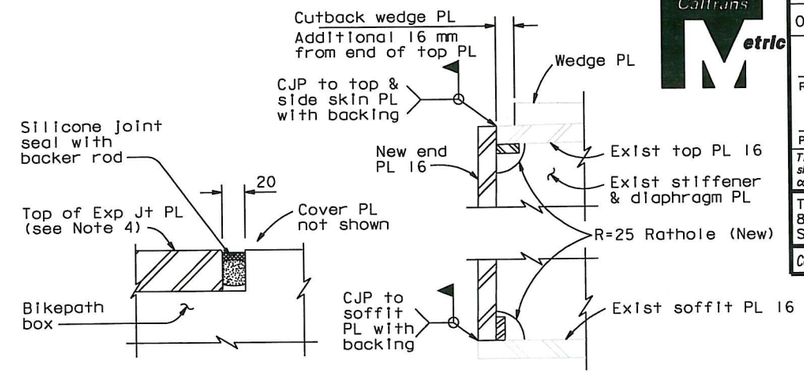

SECTION B-B
1:2.5

DETAIL E
1:2.5

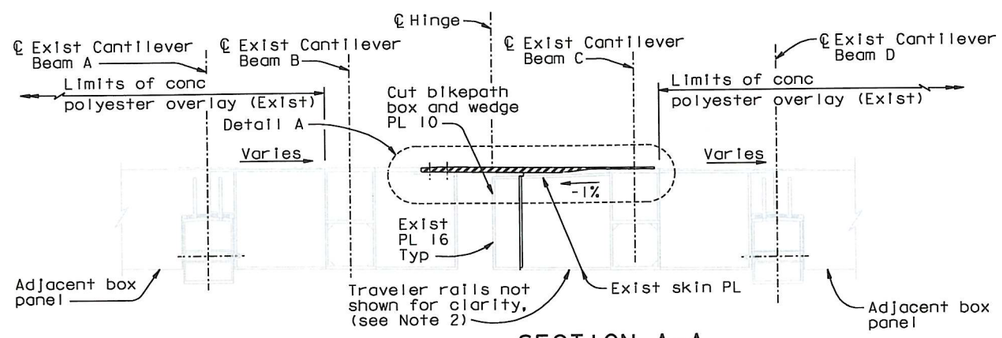

SECTION A-A
1:20

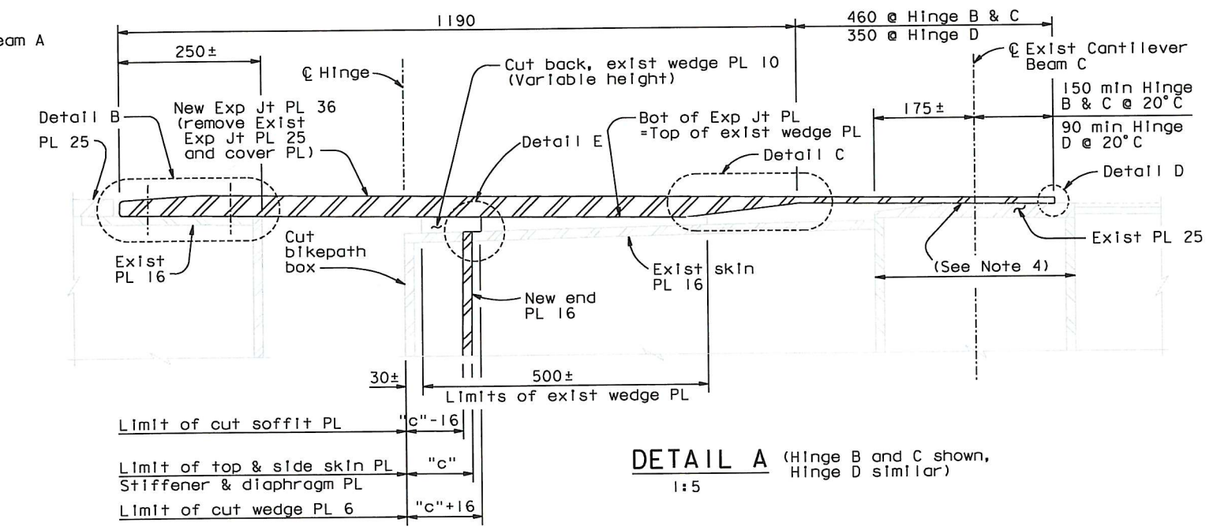

DETAIL A (Hinge B and C shown, Hinge D similar)
1:5

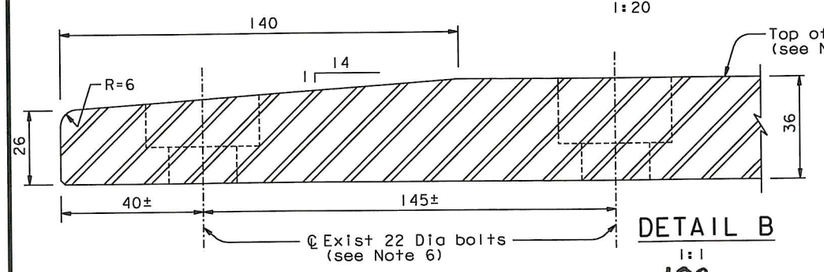

DETAIL B
1:1

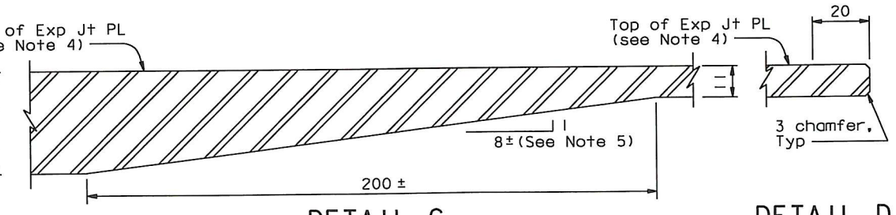

DETAIL C
1:1

DETAIL D
1:1

NOTES:

1. For Hinge B, C and Detail F, see "Skyway Bikepath Expansion Joint Replacement No. 2" sheet. For Hinge A, see "Skyway Bikepath Expansion Joint Replacement No. 3" sheet.
2. For traveler rail modifications, see "Skyway Bikepath Expansion Joint Replacement No. 4" sheet.
3. The Contractor shall verify all the dimensions in field before fabricating the expansion joint plate.
4. Top surface of exposed plates shall have non-skid coating.
5. Slope shall match the slope of exist top PL 25 of Cantilever Beam C.
6. Location and dimension of the countersunk holes shall be verified to match with exist holes in exist PL 16 and exist expansion joint plate. All the plates cut shall be ground square.

CONTRACT CHANGE ORDER NO. 193
SHEET 4 OF 7

REQUESTS FOR INFORMATION NOT ADDRESSED IN THIS CCO REMAIN IN FORCE

ALL DIMENSIONS ARE IN MILLIMETERS UNLESS OTHERWISE SHOWN

R. Valizadeh/V. Toan/Y.L./W.L./F.C.
DESIGN OVERSIGHT
SIGN OFF DATE 04/15/11

MARK	DATE	DESCRIPTIONS	BY	CH'D	CCO#
0	04/15/11	SKYWAY BIKEPATH EXPANSION JOINT	AS	HP	193

REVISIONS

	BY	CHECKED
DESIGN	A. Sanjines	H. Patel
DETAILS	A. Sanjines	H. Patel
QUANTITIES	A. Sanjines	H. Patel

PREPARED FOR THE STATE OF CALIFORNIA DEPARTMENT OF TRANSPORTATION

R. Manzanarez
PROJECT ENGINEER

BRIDGE NO. 34-0006L/R
KILOMETER POST 13.2/13.9

SAN FRANCISCO OAKLAND BAY BRIDGE
EAST SPAN SEISMIC SAFETY PROJECT
SELF-ANCHORED SUSPENSION BRIDGE
(SUPERSTRUCTURE & TOWER)
SKYWAY BIKEPATH EXPANSION JOINT REPLACEMENT NO. 1

Rev. Date: 5-18-98

ORIGINAL SCALE IN MILLIMETERS FOR REDUCED PLANS 0 10 20 30 40 50 60 70 80 90 100

CU 04
EA 0120F1

DISREGARD PRINTS BEARING EARLIER REVISION DATES 04/15/11

REVISION DATES (PRELIMINARY STAGE ONLY)

SHEET 747 OF 57

FILE => I:\bb\04-012001\sas\contract plans and cco\cco\cco#193\1-original 04-15-11\dgn\sbjnt01.dgn

USERNAME => DWinrow DATE PLOTTED => 15 APR 2011 TIME PLOTTED => 10:17:45

100% PS&E

DIST.	COUNTY	ROUTE	KILOMETER POST TOTAL PROJECT	SHEET NO.	TOTAL SHEETS
04	SF	80	13.2/13.9	1164S8	1204

REGISTERED ENGINEER - CIVIL

04-15-11

PLANS APPROVAL DATE

REGISTERED PROFESSIONAL ENGINEER Alex E. Sanjines No. C 051153 Exp. 9/30/11 CIVIL STATE OF CALIFORNIA

The State of California or its officers or agents shall not be responsible for the accuracy or completeness of electronic copies of this plan sheet.

T.Y. LIN / MOFFATT & NICHOL
825 BATTERY STREET
SAN FRANCISCO, CA 94111

Caltrans now has a web site! To get to the web site, go to: http://www.dot.ca.gov

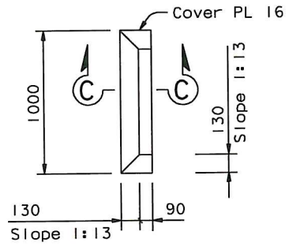

DETAIL F
1:20

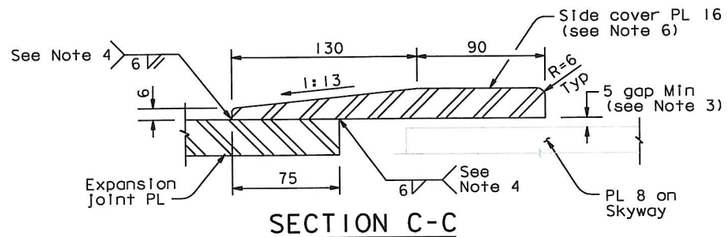

SECTION C-C
1:2

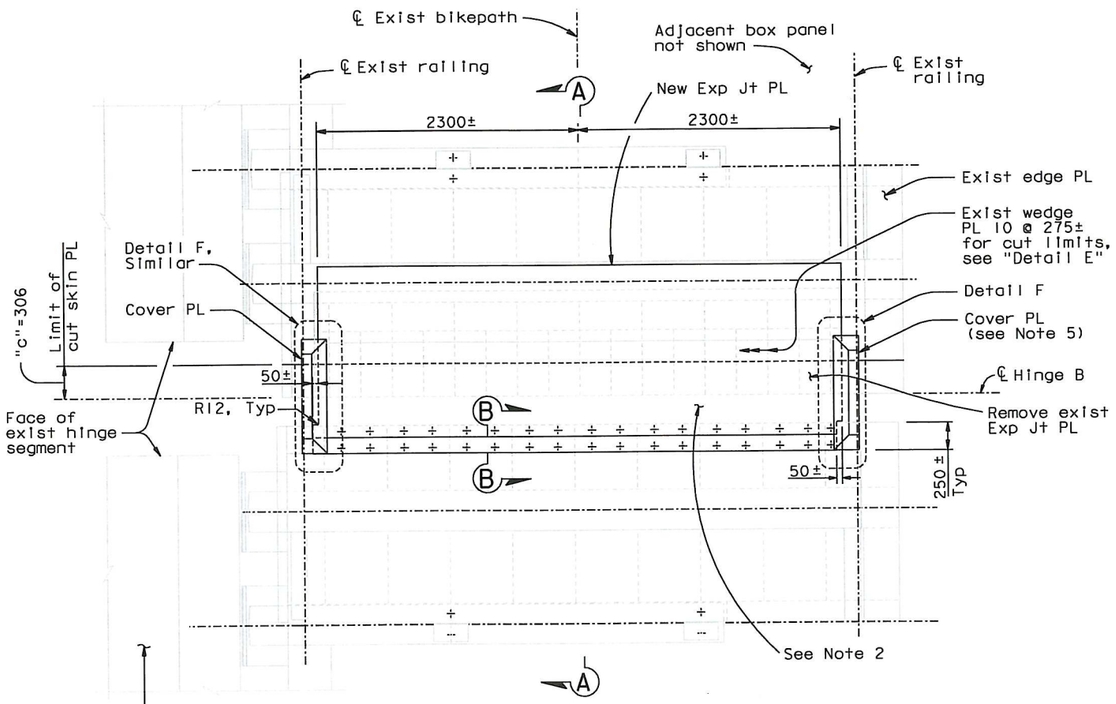

PLAN (Box panel at Expansion Joint - Hinge B)
1:25

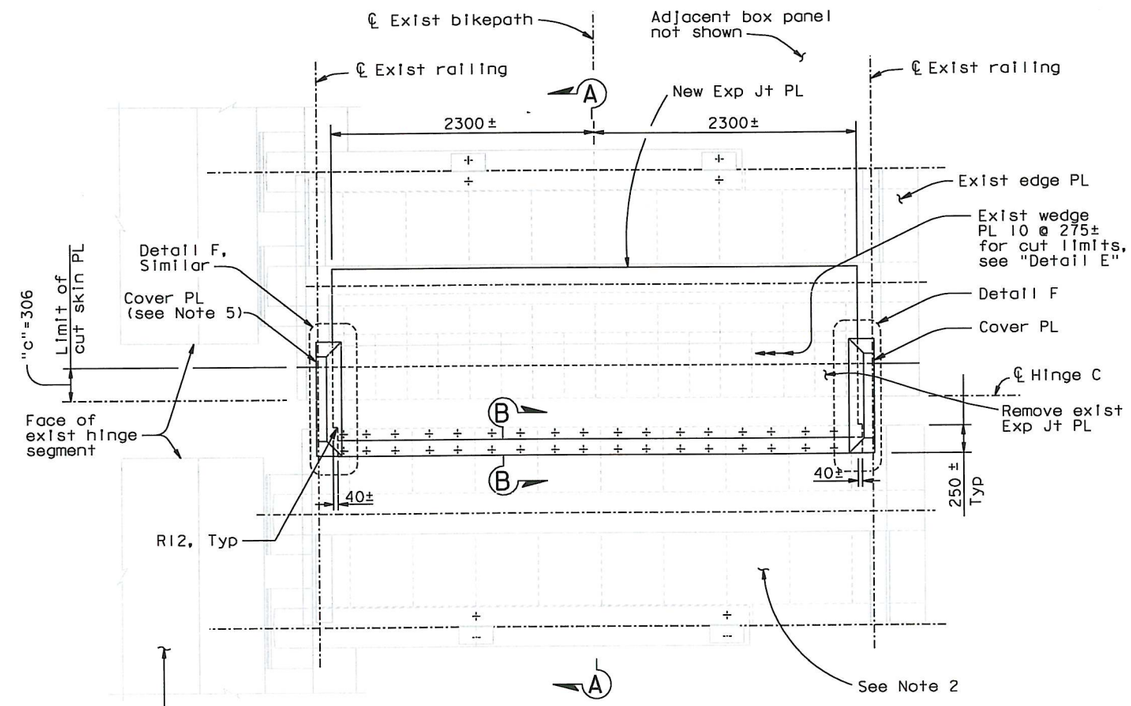

PLAN (Box panel at Expansion Joint - Hinge C)
1:25

NOTES:

1. For Sections A-A and B-B, see "Skyway Bikepath Expansion Joint Replacement No. 1" sheet.
2. For details not shown, see Plan (Box panel at Expansion Joint - Hinge D) on "Skyway Bikepath Expansion Joint Replacement No. 1" sheet.
3. Cover PL may be shimmed to maintain Min gap shown.
4. Terminate the weld 12 mm short of the expansion joint PL taper at the bolted end. Caulk the space between the cover PL and the expansion joint PL at the tapered end of the expansion joint PL. At the Contractor's option, the weld between expansion joint PL and cover PL may be field weld.
5. Trim the cover PL as necessary to clear the expansion joint PL bolted connection.
6. Top surface of the exposed plates shall have non-skid coating.

ALL DIMENSIONS ARE IN MILLIMETERS UNLESS OTHERWISE SHOWN

CONTRACT CHANGE ORDER NO. 193
SHEET 5 OF 7

REQUESTS FOR INFORMATION NOT ADDRESSED IN THIS CCO REMAIN IN FORCE

R. Vallzadeh/V. Toan/Y.L./W.L./F.C.
DESIGN OVERSIGHT
Roya Vallzadeh / Vong Toan / Y. Liu
SIGN OFF DATE 04/15/11

MARK	DATE	DESCRIPTIONS	BY	CH'D	CCO#
0	04/15/11	SKYWAY BIKEPATH EXPANSION JOINT	AS	HP	193

REVISIONS

DESIGN	BY A. Sanjines	CHECKED	H. Patel
DETAILS	BY A. Sanjines	CHECKED	H. Patel
QUANTITIES	BY A. Sanjines	CHECKED	H. Patel

PREPARED FOR THE STATE OF CALIFORNIA DEPARTMENT OF TRANSPORTATION

R. Manzanarez
PROJECT ENGINEER

BRIDGE NO. 34-0006L/R
KILOMETER POST 13.2/13.9

SAN FRANCISCO OAKLAND BAY BRIDGE
EAST SPAN SEISMIC SAFETY PROJECT
SELF-ANCHORED SUSPENSION BRIDGE
(SUPERSTRUCTURE & TOWER)

SKYWAY BIKEPATH EXPANSION JOINT REPLACEMENT NO. 2

Rev. Date: 5-18-98

ORIGINAL SCALE IN MILLIMETERS FOR REDUCED PLANS 0 10 20 30 40 50 60 70 80 90 100

CU 04
EA 0120F1

DISREGARD PRINTS BEARING EARLIER REVISION DATES 04/15/11

REVISION DATES (PRELIMINARY STAGE ONLY)

SHEET 747S8 OF

FILE => I:\bb\04-01200I\sas\contract plans and cco\cco\cco#193\I-original 04-15-11\dgn\sbjnt02.dgn

100% PS&E

USERNAME => DWinrow DATE PLOTTED => 15 APR 2011 TIME PLOTTED => 10:20:03

DIST.	COUNTY	ROUTE	KILOMETER POST TOTAL PROJECT	SHEET NO.	TOTAL SHEETS
04	SF	80	13.2/13.9	116459	1204

REGISTERED ENGINEER - CIVIL

04-15-11
PLANS APPROVAL DATE

The State of California or its officers or agents shall not be responsible for the accuracy or completeness of electronic copies of this plan sheet.

REGISTERED PROFESSIONAL ENGINEER Alex E. Sanjines No. C 051153 Exp. 9/30/11 CIVIL STATE OF CALIFORNIA

T.Y. LIN / MOFFATT & NICHOL
825 BATTERY STREET
SAN FRANCISCO, CA 94111

Caltrans now has a web site! To get to the web site, go to: http://www.dot.ca.gov

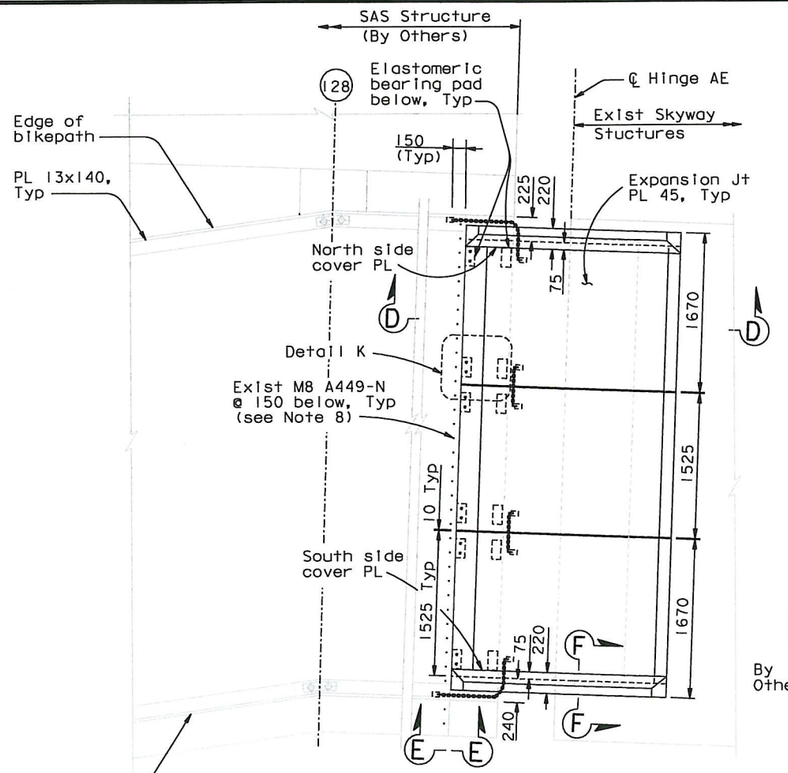

PLAN AT HINGE AE

1:30

(Internal stiffening and cover PL not shown for clarity)

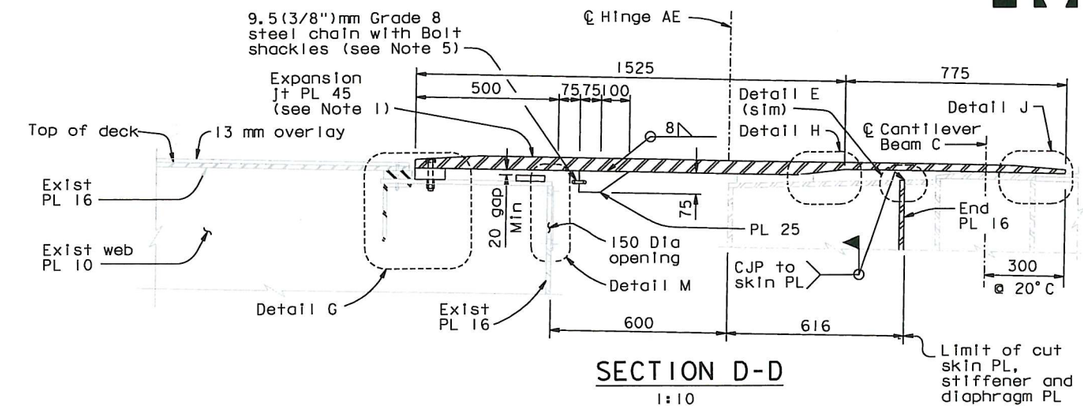

SECTION D-D

1:10

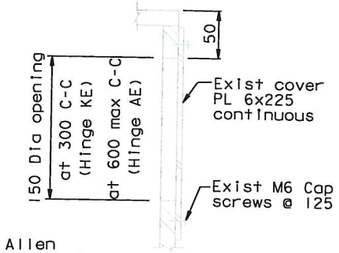

DETAIL M

1:3

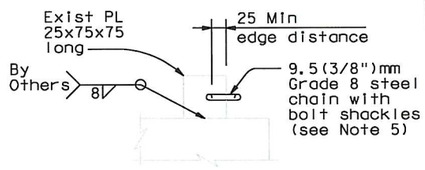

SECTION E-E

1:5

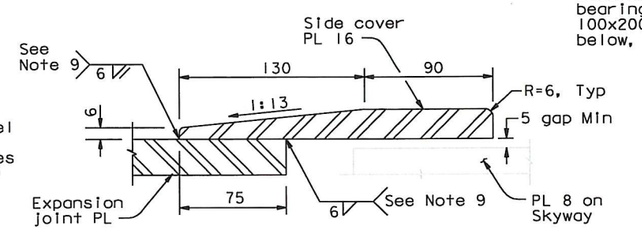

SECTION F-F

1:2

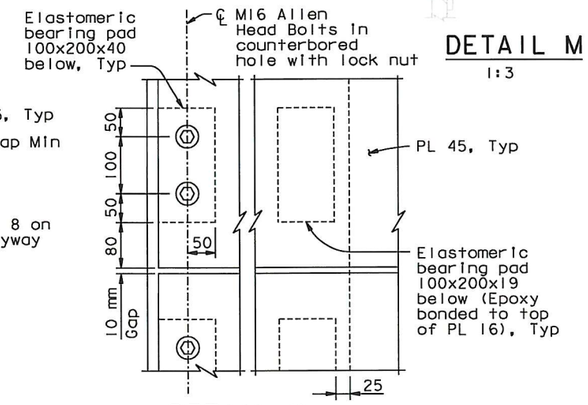

DETAIL K

1:5

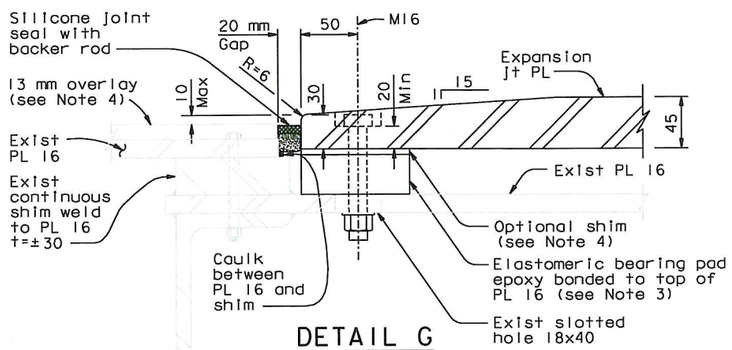

DETAIL G

1:2.5

(See Note 2)

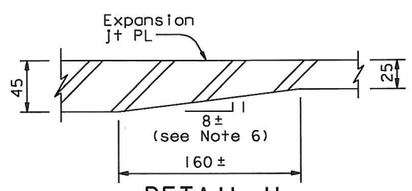

DETAIL H

1:2.5

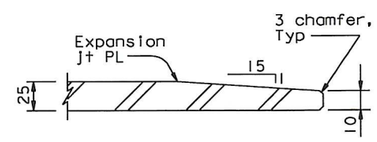

DETAIL J

1:2.5

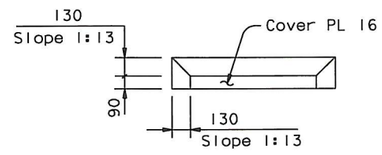

COVER PLATES LAYOUT

1:20 (South side shown, North side similar)

NOTES:

1. Top surface of exposed plates shall have non-skid coating.
2. For details not shown, see SAS-"Bikepath Details" sheets.
3. Pre-compress elastomeric pad by 2 mm by means of 1 turn of M16 bolt.
4. Thickness of shim and overlay may vary to provide tolerance to adjust for As-Built Skyway.
5. Chains and shackles should be hot-dipped galvanized and have a working capacity of 27kN. Chain drape shall not exceed 50 mm.
6. Slope shall match the slope of exist top PL of Cantilever Beam C.
7. The Contractor shall verify all the dimensions in field before fabricating the expansion joint plate. All the plates cut shall be ground square.
8. Bolts shall be installed with threads including in the shear plane.
9. Terminate the weld 12 mm short of the expansion joint PL taper at the bolted end. Caulk the space between the cover PL and the expansion joint PL at the tapered end of the expansion joint PL.
10. For detail E, see "Skyway Bikepath Expansion Joint Replacement No.1" sheet.

CONTRACT CHANGE ORDER NO. 193
SHEET 6 OF 7

REQUESTS FOR INFORMATION NOT ADDRESSED IN THIS CCO REMAIN IN FORCE

ALL DIMENSIONS ARE IN MILLIMETERS UNLESS OTHERWISE SHOWN

R. Valizadeh/V. Toan/Y. L./W. L./F. C.
DESIGN OVERSIGHT
SIGN OFF DATE 04/15/11

MARK	DATE	DESCRIPTIONS	BY	CH'D	CCO#
0	04/15/11	SKYWAY BIKEPATH EXPANSION JOINT	AS	HP	193

REVISIONS

DESIGN	BY A. Sanjines	CHECKED	H. Patel
DETAILS	BY A. Sanjines	CHECKED	H. Patel
QUANTITIES	BY A. Sanjines	CHECKED	H. Patel

PREPARED FOR THE STATE OF CALIFORNIA DEPARTMENT OF TRANSPORTATION

R. Manzanarez
PROJECT ENGINEER

BRIDGE NO. 34-0006L/R
KILOMETER POST 13.2/13.9

SAN FRANCISCO OAKLAND BAY BRIDGE
EAST SPAN SEISMIC SAFETY PROJECT
SELF-ANCHORED SUSPENSION BRIDGE
(SUPERSTRUCTURE & TOWER)
SKYWAY BIKEPATH EXPANSION JOINT REPLACEMENT NO. 3

Rev. Date: 5-18-98

ORIGINAL SCALE IN MILLIMETERS FOR REDUCED PLANS 0 10 20 30 40 50 60 70 80 90 100

CU 04
EA 0120F1

DISREGARD PRINTS BEARING EARLIER REVISION DATES 04/15/11

REVISION DATES (PRELIMINARY STAGE ONLY)

SHEET 747S9 OF

FILE => I:\bb\04-01200I\sas\contract plans and cco\cco\cco#193\I-original 04-15-11\dgn\sbjnt03.dgn

100 % PS&E

USERNAME => DWinrow DATE PLOTTED => 15 APR 2011 TIME PLOTTED => 10:20:42

DIST.	COUNTY	ROUTE	KILOMETER POST TOTAL PROJECT	SHEET NO.	TOTAL SHEETS
04	SF	80	13.2/13.9	1164S10	1204

REGISTERED ENGINEER - CIVIL

04-15-11
PLANS APPROVAL DATE

REGISTERED PROFESSIONAL ENGINEER Alex E. Sanjines No. C 051153 Exp. 9/30/11 CIVIL STATE OF CALIFORNIA

The State of California or its officers or agents shall not be responsible for the accuracy or completeness of electronic copies of this plan sheet.

T.Y. LIN / MOFFATT & NICHOL
825 BATTERY STREET
SAN FRANCISCO, CA 94111

Caltrans now has a web site! To get to the web site, go to: http://www.dot.ca.gov

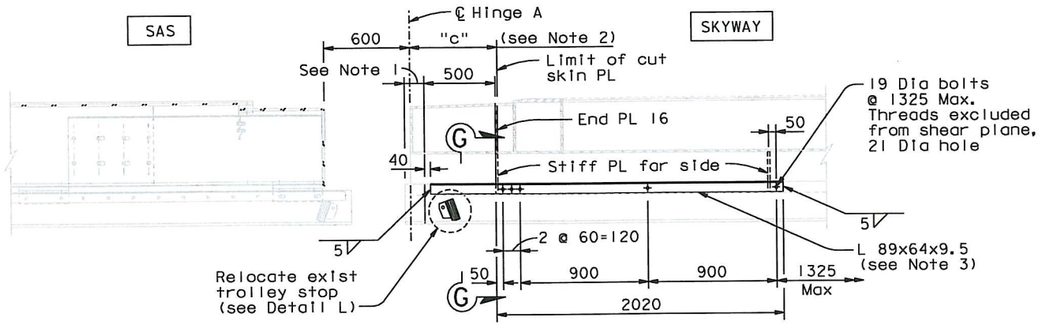

AT HINGE A

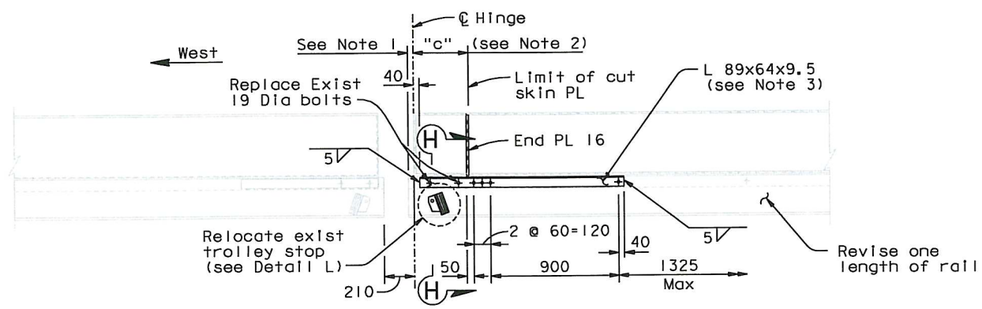

AT HINGES B & C

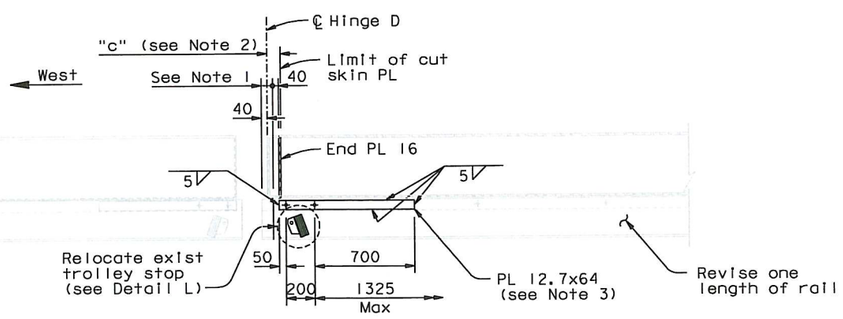

AT HINGE D

TRAVELER OUTER RAIL MODIFICATION

1:20

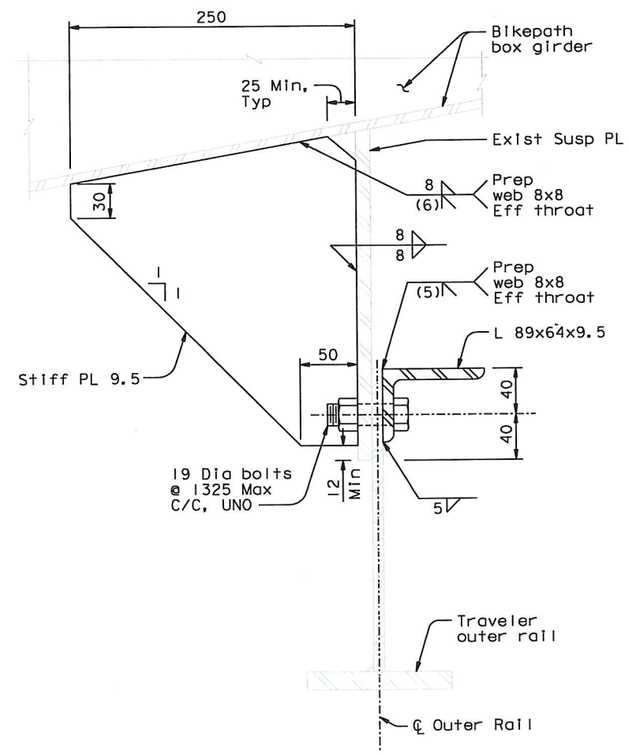

SECTION G-G

1:2.5

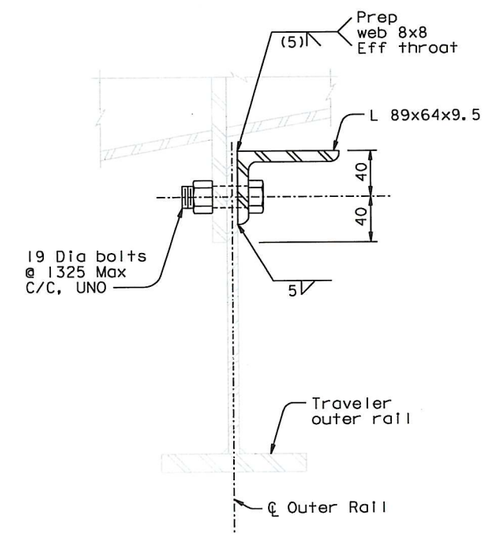

SECTION H-H

1:2.5

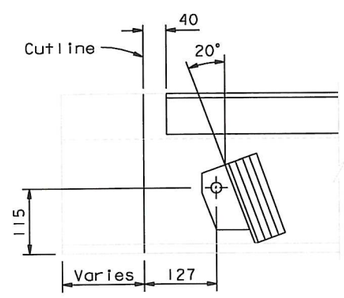

DETAIL L

1:5

NOTES:

1. Cut the traveler rail as shown. All the plates cut be ground square.
2. For dimension "c", see "Skyway Bikepath Expansion Joint Replacement No. 1 thru No. 3" sheets.
3. At the Contractor's option, the last segment of rail may be disassembled and lowered to facilitate welding between L89x64 and exist suspension PL.

CONTRACT CHANGE ORDER NO. 193
SHEET 7 OF 7

REQUESTS FOR INFORMATION NOT ADDRESSED IN THIS CCO REMAIN IN FORCE

ALL DIMENSIONS ARE IN MILLIMETERS UNLESS OTHERWISE SHOWN

R. Vallizadeh/V. Toan/Y. L./W. L./F. C.
DESIGN OVERSIGHT
SIGN OFF DATE 04/15/11

MARK	DATE	DESCRIPTIONS	BY	CH'D	CCO#
0	04/15/11	SKYWAY BIKEPATH EXPANSION JOINT	AS	HP	193

REVISIONS

DESIGN	BY A. Sanjines	CHECKED H. Patel	
DETAILS	BY A. Sanjines	CHECKED H. Patel	
QUANTITIES	BY A. Sanjines	CHECKED H. Patel	

PREPARED FOR THE STATE OF CALIFORNIA DEPARTMENT OF TRANSPORTATION

R. Manzanarez
PROJECT ENGINEER

BRIDGE NO. 34-0006L/R
KILOMETER POST 13.2/13.9

SAN FRANCISCO OAKLAND BAY BRIDGE
EAST SPAN SEISMIC SAFETY PROJECT
SELF-ANCHORED SUSPENSION BRIDGE
(SUPERSTRUCTURE & TOWER)

SKYWAY BIKEPATH EXPANSION JOINT REPLACEMENT NO. 4

CU 04
EA 0120F1

DISREGARD PRINTS BEARING EARLIER REVISION DATES → 04/15/11

REVISION DATES (PRELIMINARY STAGE ONLY)

SHEET 747S10 OF

Rev. Date: 5-18-98

ORIGINAL SCALE IN MILLIMETERS FOR REDUCED PLANS 0 10 20 30 40 50 60 70 80 90 100

FILE => I:\bb\04-01200I\sas\contract plans and cco\cco\cco#193\I-original 04-15-11\dgn\sbjnt04.dgn

USERNAME => DWinrow DATE PLOTTED => 15 APR 2011 TIME PLOTTED => 10:21:36

100% P&E