DIST.	COUNTY	ROUTE	KILOMETER POST TOTAL PROJECT	SHEET NO.	TOTAL SHEETS
04	SF, Ala	80	13.9/14.3, 0.0/2.7	1165R1	1204

Caltrans Metric

REGISTERED ENGINEER - CIVIL

06-22-11
PLANS APPROVAL DATE

REGISTERED PROFESSIONAL ENGINEER Tien Hung Ho No. C 43990 Exp. 06/30/13 CIVIL STATE OF CALIFORNIA

The State of California or its officers or agents shall not be responsible for the accuracy or completeness of electronic copies of this plan sheet.

T.Y. LIN / MOFFATT & NICHOL
TWO HARRISON STREET
SAN FRANCISCO, CA 94105

Caltrans now has a web site! To get to the web site, go to: http://www.dot.ca.gov

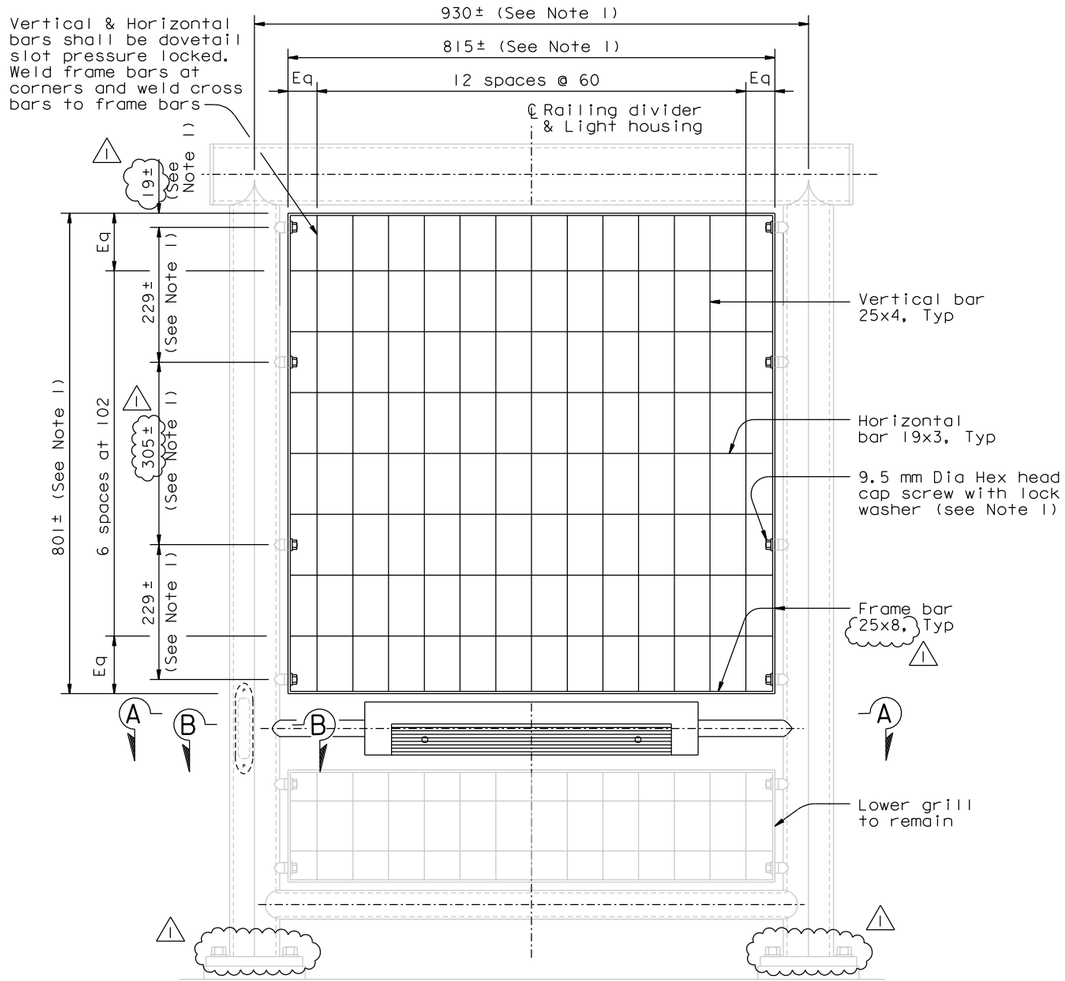

OAKLAND APPROACH STRUCTURES

RAILING DIVIDER DETAIL

1:5

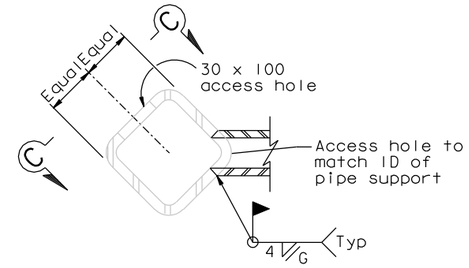

SECTION B-B

1:2

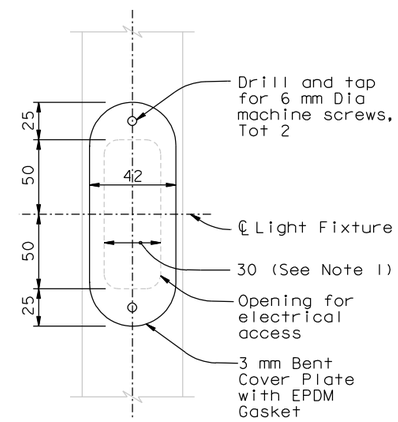

VIEW C-C

1:2

RAILING DIVIDER MODIFICATION PROCEDURE:

1. Remove and install new upper railing grill.
2. Remove and install new light housing.
3. Drill and tap holes, install new access hole cover plates.
4. Galvanized surfaces shall be repaired. Areas with damaged paint or with no paint shall be cleaned and painted.

NOTES:

1. The Contractor shall field verify dimensions prior to fabrication.

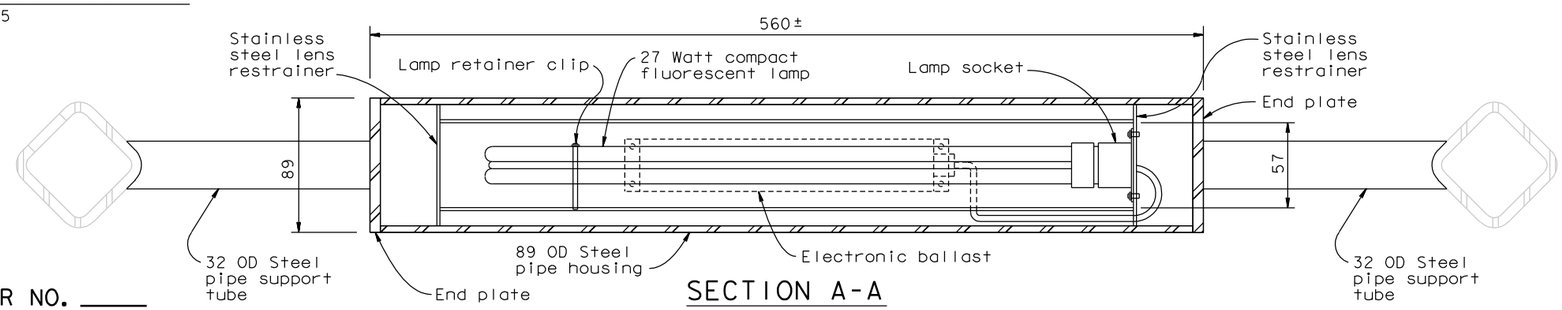

SECTION A-A

1:2

CONTRACT CHANGE ORDER NO. _____
SHEET ____ OF ____

REQUESTS FOR INFORMATION NOT ADDRESSED IN THIS CCO REMAIN IN FORCE

W. Long, Y. Liu
DESIGN OVERSIGHT
Wenyi Long / Y Liu
SIGN OFF DATE 02/10/12

MARK	DATE	DESCRIPTIONS	BY	CH'D	CCO#
1	02/10/12	OTD DIVIDER RAIL MODIFICATIONS	AB	TH	192S1
0	06/22/11	OTD DIVIDER RAIL MODIFICATIONS	TH	JD	192

REVISIONS

	BY	CHECKED
DESIGN	T. Ho	J. Duxbury
DETAILS	T. Ho	J. Duxbury
QUANTITIES	T. Ho	J. Duxbury

PREPARED FOR THE STATE OF CALIFORNIA DEPARTMENT OF TRANSPORTATION

R. Manzanarez
PROJECT ENGINEER

BRIDGE NO. 34-0006 L/R
KILOMETER POST 13.9/14.3, 0.0/2.7

SAN FRANCISCO OAKLAND BAY BRIDGE
EAST SPAN SEISMIC SAFETY PROJECT

OAKLAND APPROACH STRUCTURES CLEANUP ITEMS

BIKEPATH RAILING DIVIDER

Rev. Date: 5-18-98

ORIGINAL SCALE IN MILLIMETERS FOR REDUCED PLANS 0 10 20 30 40 50 60 70 80 90 100

CU 04
EA 0120F1

DISREGARD PRINTS BEARING EARLIER REVISION DATES 06/22/11

REVISION DATES (PRELIMINARY STAGE ONLY)

SHEET 748R1 OF

FILE => I:\bb\04-012001\sas\contract plans and cco\cco\cco#192s1\1-original 02-10-12\dgn\akctd04.dgn

100% PS&E

USERNAME => DWinrow DATE PLOTTED => 09 FEB 2012 TIME PLOTTED => 14:36:08