DIST.	COUNTY	ROUTE	KILOMETER POST TOTAL PROJECT	SHEET NO.	TOTAL SHEETS
04	SF, Ala	80	13.9/14.3, 0.0/2.7	1165S1	1204

REGISTERED ENGINEER - CIVIL

08-26-11

PLANS APPROVAL DATE

REGISTERED PROFESSIONAL ENGINEER James P. Duxbury No. C 64677 Exp. 06/30/13 CIVIL STATE OF CALIFORNIA

The State of California or its officers or agents shall not be responsible for the accuracy or completeness of electronic copies of this plan sheet.

T.Y. LIN / MOFFATT & NICHOL
TWO HARRISON STREET
SAN FRANCISCO, CA 94105

Caltrans now has a web site! To get to the web site, go to: http://www.dot.ca.gov

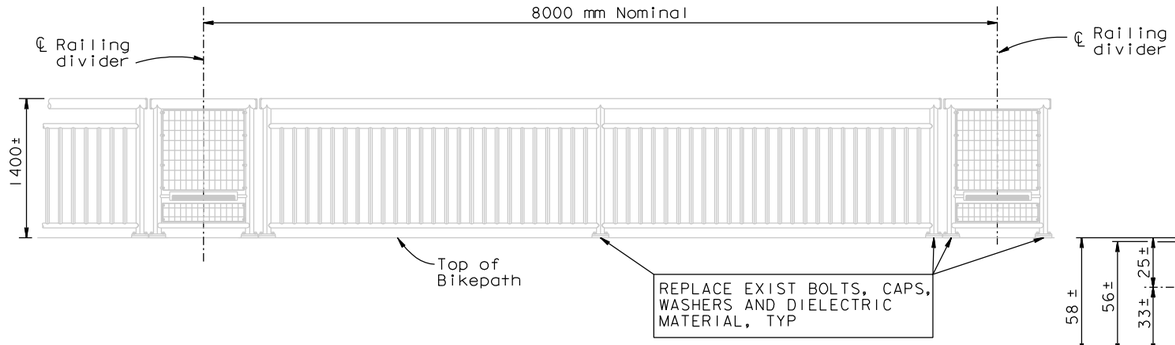

EXISTING BIKEPATH RAILING - TYPICAL ELEVATION

1:30

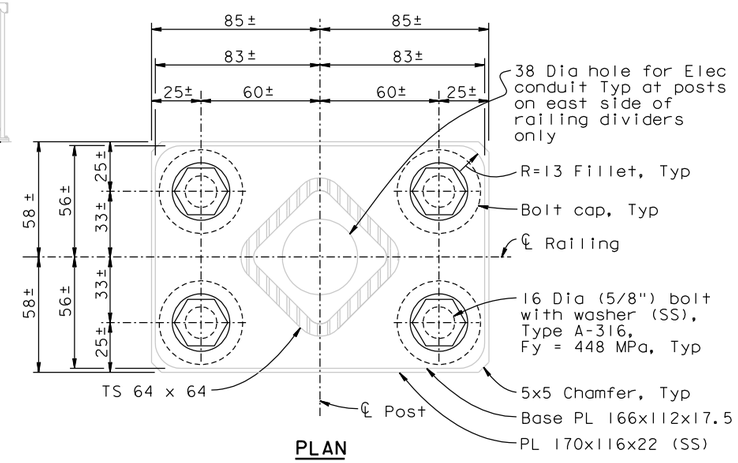

PLAN

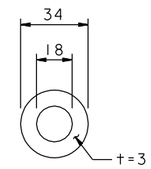

DIELECTRIC WASHER

1:1.5

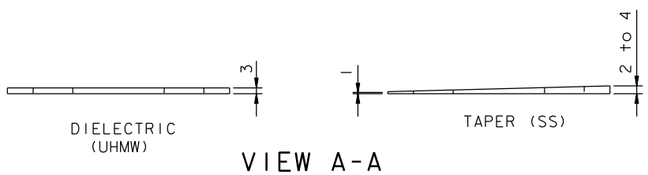

VIEW A-A

1:1.5

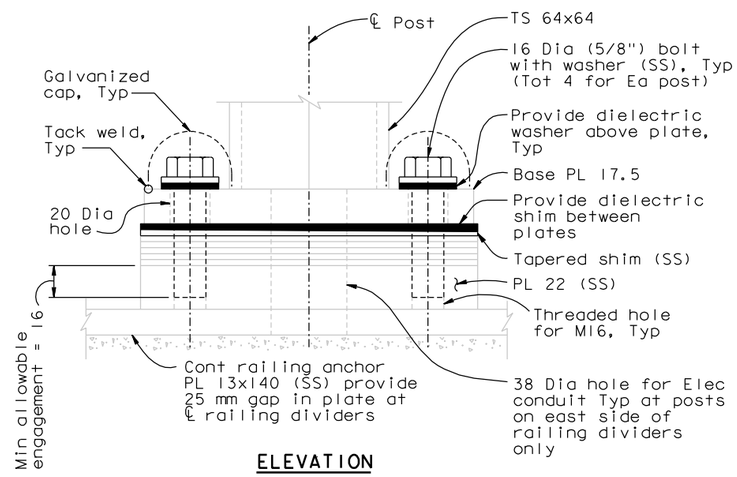

ELEVATION

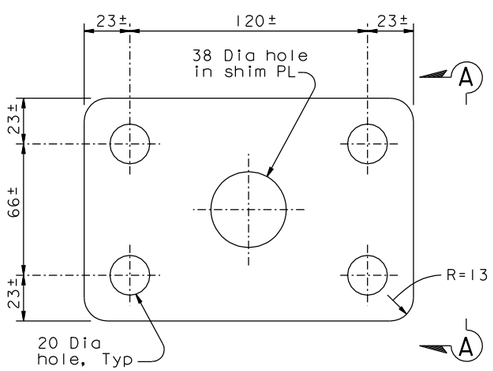

SHIM DETAIL (See Note 3)

1:1.5

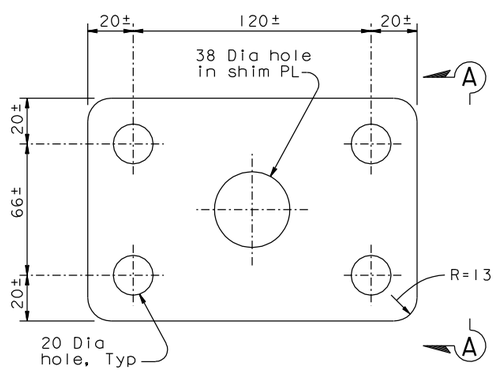

ALTERNATE SHIM DETAIL

1:1.5

TYPICAL EXISTING POST BASEPLATE

1:1.5

BOLT AND SHIM REPLACEMENT PROCEDURE:

1. Remove and discard bolt, cap and washer.
2. Remove and discard the dielectric material above and below the base plate.
3. Clean out and dry the threaded anchor hole.
4. If needed, replace the top most existing stainless steel standard shim with a new stainless steel tapered shim of thickness and taper necessary to properly align top rail of bikepath railing.
5. Install dielectric shim (UHMW) below base plate.
6. Install dielectric washer (UHMW) above base plate.
7. Insert new bolt, domed cap and washer. The length of the bolt shall be such that the engagement length into the PL 22 is a minimum of 16 mm.
8. Bolts shall be tightened to "Snug Tight Plus 1/4 Turn". Bolts shall be installed with thread locking compound.

NOTES:

1. Bolt and shim replacement shall be performed on all railing divider posts and all standard railing posts on the North and South side bikepath railing.
2. The Contractor shall verify all controlling field dimensions before ordering or fabrication any material or performing any work that might thereby be affected.
3. The alternate shim dimensions shall be used as directed by the Engineer.

CONTRACT CHANGE ORDER NO. ____
SHEET ___ OF ___

REQUESTS FOR INFORMATION NOT ADDRESSED IN THIS CCO REMAIN IN FORCE

ALL DIMENSIONS ARE IN MILLIMETERS UNLESS OTHERWISE SHOWN

SAN FRANCISCO OAKLAND BAY BRIDGE
EAST SPAN SEISMIC SAFETY PROJECT

OAKLAND APPROACH STRUCTURES CLEANUP ITEMS

HANDRAIL ADJUSTABILITY DETAILS

W. Long, Y. Liu
DESIGN OVERSIGHT
Wenji Long / Y Liu
SIGN OFF DATE 08/26/11

MARK	DATE	DESCRIPTIONS	BY	CH'D	CCO#
0	08/26/11	OTD DIVIDER RAIL MODIFICATION	JD	TH	192

REVISIONS

	BY	CHECKED
DESIGN	J. Duxbury	T. Ho
DETAILS	A. Baumberger	T. Ho
QUANTITIES	A. Baumberger	T. Ho

PREPARED FOR THE STATE OF CALIFORNIA DEPARTMENT OF TRANSPORTATION

R. Manzanarez
PROJECT ENGINEER

BRIDGE NO. 34-0006L/R
KILOMETER POST 13.9/14.3, 0.0/2.7

Rev. Date: 5-18-98

ORIGINAL SCALE IN MILLIMETERS FOR REDUCED PLANS 0 10 20 30 40 50 60 70 80 90 100

CU 04
EA 0120F1

DISREGARD PRINTS BEARING EARLIER REVISION DATES 08/26/11

REVISION DATES (PRELIMINARY STAGE ONLY)

SHEET 748S1 OF

FILE => I:\bb\04-012001\sas\contract plans and cco\cco\cco*192\4-revision 08-26-11\dgn\akdvr01a.dgn

USERNAME => DWinrow DATE PLOTTED => 25 AUG 2011 TIME PLOTTED => 14:22:48

100% PS&E