DIST	COUNTY	ROUTE	KILOMETER POST TOTAL PROJECT	SHEET No	TOTAL SHEETS
04	SF	80	13.2/13.9		1204

REGISTERED ELECTRICAL ENGINEER DATE

PLANS APPROVAL DATE

REGISTERED PROFESSIONAL ENGINEER NO. EXP. ELECTRICAL STATE OF CALIFORNIA

PB AMERICAS, Inc.
A Parsons Brinckerhoff Company
303 Second St., Suite 700N
San Francisco, CA 94107-1317

The State of California or its officers or agents shall not be responsible for the accuracy or completeness of electronic copies of this plan sheet.

Caltrans now has a web site! To get to the web site, go to http://www.dot.ca.gov

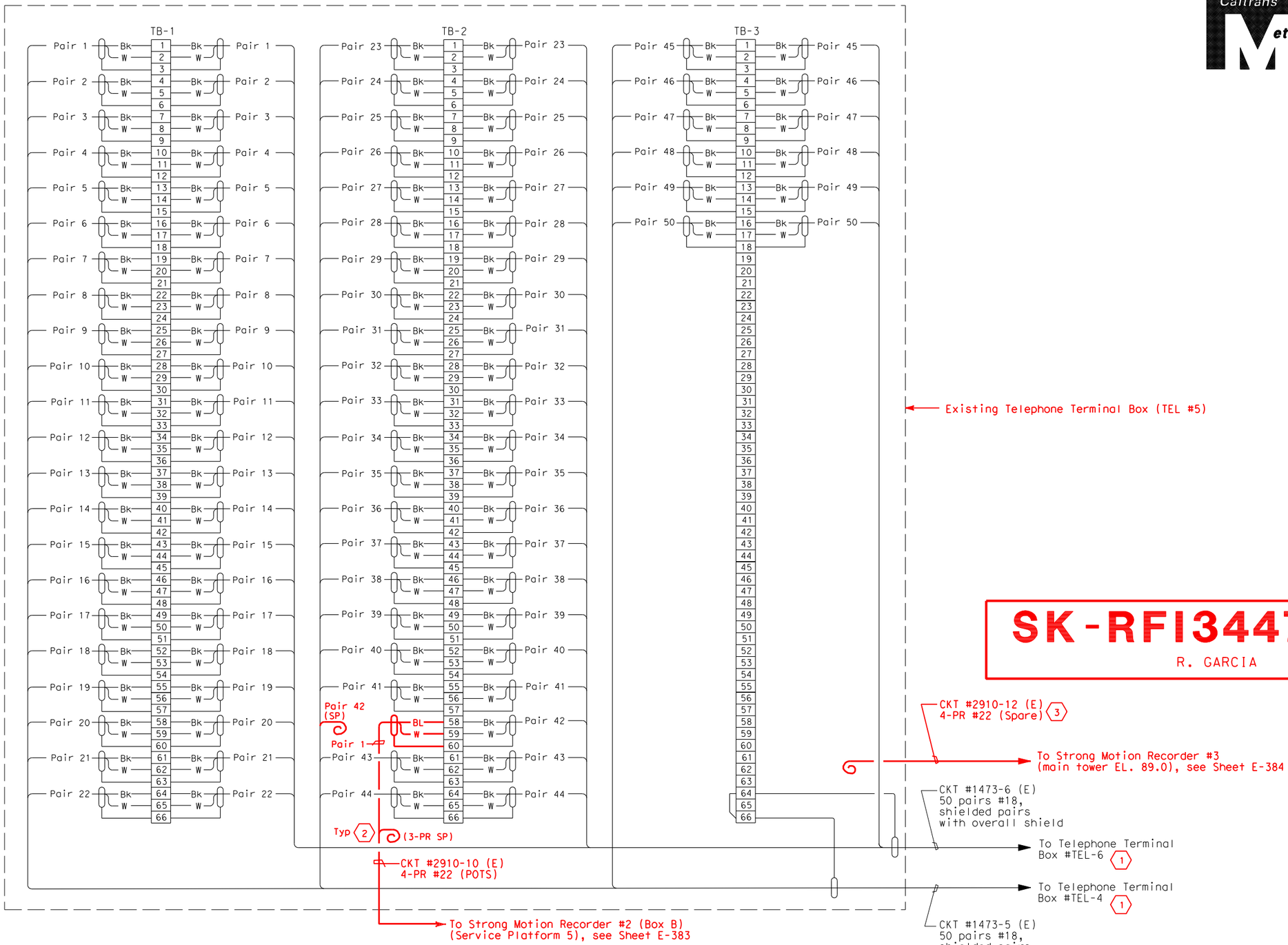

TELEPHONE TERMINAL BOX CONNECTION DIAGRAM

SHEET NOTES:

1. For terminal connection diagram and continuation to TEL #4, see E-337C. For TEL #6, see E-337.
2. Spare cable or conductor ends shall be coiled and taped.
3. Existing cable #2910-12 shall be abandoned in place, labeled spare and unterminated. Cable ends shall be coiled and taped.

NOTES:

1. References:
   - For circuit and conduit/cable tray schedules, see sheets starting at E-401.
   - For Scada and telephone cable block diagram, see sheet E-317.
   - For telephone interface plan and cable block diagram, see sheet E-316.

SK-RFI3447R00-E337D

R. GARCIA AUGUST 15, 2013

DETAILS
SCADA REMOTE TERMINAL UNIT SYSTEM
#TEL-5 TERMINAL CONNECTION DIAGRAM

NO SCALE

(NEW DRAWING)

DATE	BY	DATE	REVISED BY
08/13	RR	08/13	REVISED

CALCULATED/DESIGNED BY RR
CHECKED BY RG

DESIGN OVERSIGHT
BEHZAD GOLEMOHAMMADI

STATE OF CALIFORNIA - DEPARTMENT OF TRANSPORTATION
Caltrans

LAST REVISION 00-00-00
DATE PLOTTED => 8/15/2013
TIME PLOTTED => 12:41:28 PM

FOR REDUCED PLANS ORIGINAL SCALE IS IN MILLIMETERS 0 20 40 60 80

DGN FILE =>T:\13103\MS\pse\SAS Struc\CCO\SAS CCO-Strong Motion\04-0120f1_0316S04.dgn
USERNAME =>GarciaR

CU 04251 EA 0120F1

DIST	COUNTY	ROUTE	KILOMETER POST TOTAL PROJECT	SHEET No	TOTAL SHEETS
04	SF	80	13.2/13.9	349 R1	1204

REGISTERED ELECTRICAL ENGINEER 12/19/02 DATE

12-6-04
PLANS APPROVAL DATE

REGISTERED PROFESSIONAL ENGINEER JENS ERLINGSSON No. 8249 Exp. 9/30/06 ELECTRICAL STATE OF CALIFORNIA

PB POWER, Inc.
A Parsons Brinckerhoff Company
303 Second St., Suite 700N
San Francisco, CA 94107-1317

The State of California or its officers or agents shall not be responsible for the accuracy or completeness of electronic copies of this plan sheet.

Caltrans now has a web site! To get to the web site, go to http://www.dot.ca.gov

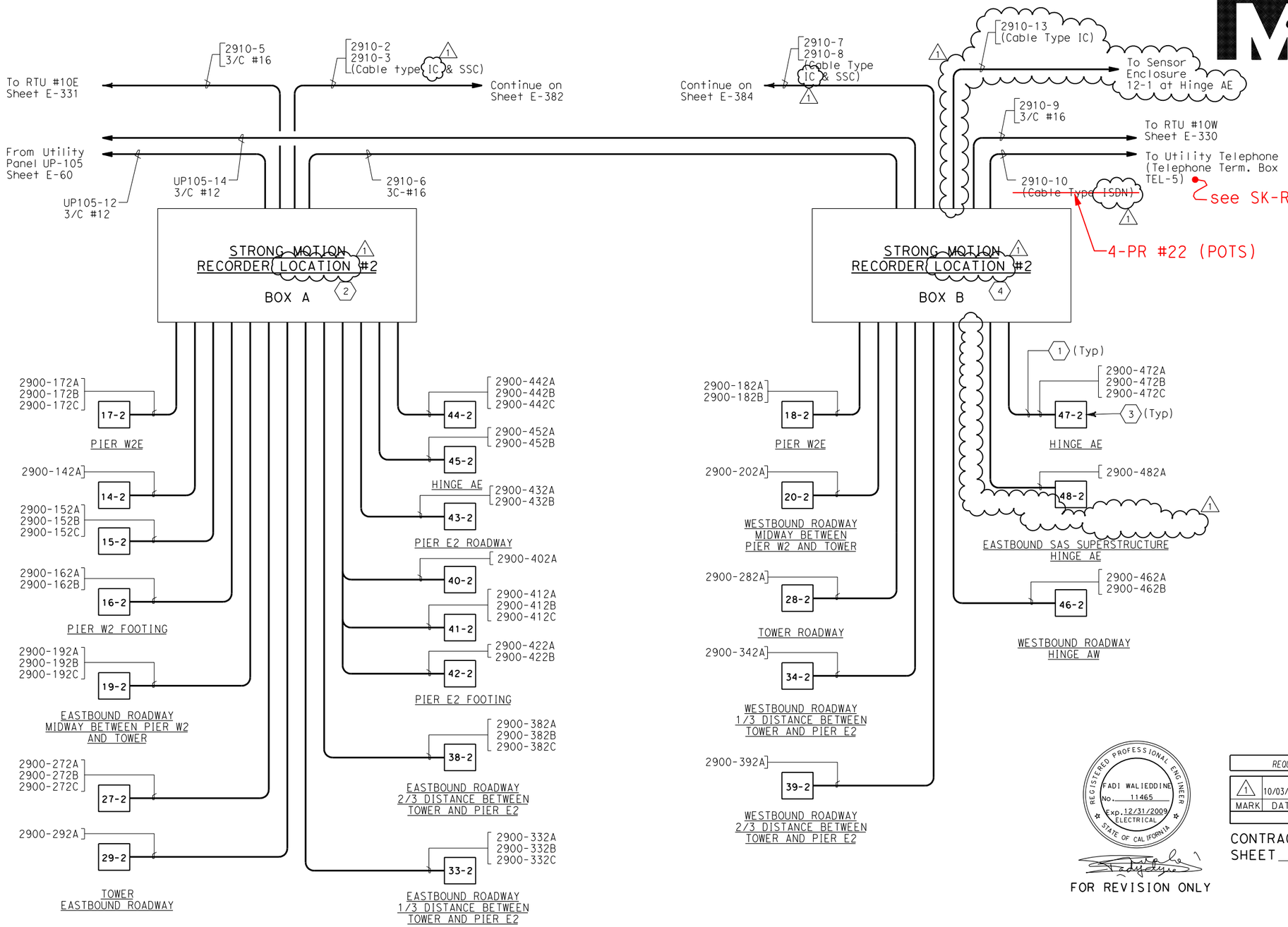

SHEET NOTES:

1. Strong Motion sensor cable Type SSC, unless otherwise indicated.
2. Strong Motion Recorder #2 Box A consists of two 18-channel recorders and one 12-channel recorder, connected to a total of 35 sensors.
3. Sensor enclosure with identification number as shown.
4. Strong Motion Recorder #2 Box B consist of one 18-channel recoder connected to a total of 12 sensors.

NOTES:

1. For other related work not shown on this drawing, see Electrical Special Provisions.
2. References:
   - For general notes of the strong motion detection system, see sheet E-361.
   - For circuit and conduit/cable tray schedules, see sheets starting at E-401.
3. All conduits and fittings located outside or inside pier shall be galvanized rigid steel, PVC coated.
4. Secure enclosure to concrete with manufacturer's recommended mounting and approved by the Engineer.
5. Strong motion recorder #2 box A and box B located on service platform 5, see sheet E-72.

REGISTERED PROFESSIONAL ENGINEER FADI WALIEDDINE No. 11465 Exp. 12/31/2009 ELECTRICAL STATE OF CALIFORNIA

FOR REVISION ONLY

REQUEST FOR INFORMATION NOT ADDRESSED IN THIS CCO REMAIN IN FORCE

MARK	DATE	DESCRIPTIONS	BY	CH'D	CCO#
1	10/03/08	STRONG MOTION SYSTEM	RG	FW	74

REVISIONS

CONTRACT CHANGE ORDER NO._____
SHEET_____ OF _____

SK-RFI3447R00-E383

R. GARCIA AUGUST 15, 2013

DETAILS
STRONG MOTION DETECTION SYSTEM CABLE BLOCK DIAGRAM

NO SCALE

E-383

THIS PLAN IS ACCURATE FOR ELECTRICAL WORK ONLY.

REVISED BY	DATE	DATE REVISED
JW	02/02	-

CALCULATED/DESIGNED BY JW
CHECKED BY -

DESIGN OVERSIGHT
BEHZAD GOLEMOHAMMADI

STATE OF CALIFORNIA - DEPARTMENT OF TRANSPORTATION
Caltrans

LAST REVISION 00-00-00
DATE PLOTTED => 8/15/2013
TIME PLOTTED => 10:46:54 AM

FOR REDUCED PLANS ORIGINAL SCALE IS IN MILLIMETERS 0 20 40 60 80

DGN FILE =>T:\13103\MS\pse\SAS Struc\CCO\SAS CCO-Strong Motion\04-0120f1_0349R02.dgn
USERNAME =>GarciaR

CU 04251 EA 0120F1

DIST	COUNTY	ROUTE	KILOMETER POST TOTAL PROJECT	SHEET No	TOTAL SHEETS
04	SF	80	13.2/13.9	350 R1	1204

Caltrans Metric

REGISTERED ELECTRICAL ENGINEER 12/19/02 DATE

12-6-04
PLANS APPROVAL DATE

REGISTERED PROFESSIONAL ENGINEER JENS ERLINGSSON No. 8249 Exp. 9/30/06 ELECTRICAL STATE OF CALIFORNIA

PB POWER, Inc.
A Parsons Brinckerhoff Company
303 Second St., Suite 700N
San Francisco, CA 94107-1317

The State of California or its officers or agents shall not be responsible for the accuracy or completeness of electronic copies of this plan sheet.

Caltrans now has a web site! To get to the web site, go to http://www.dot.ca.gov

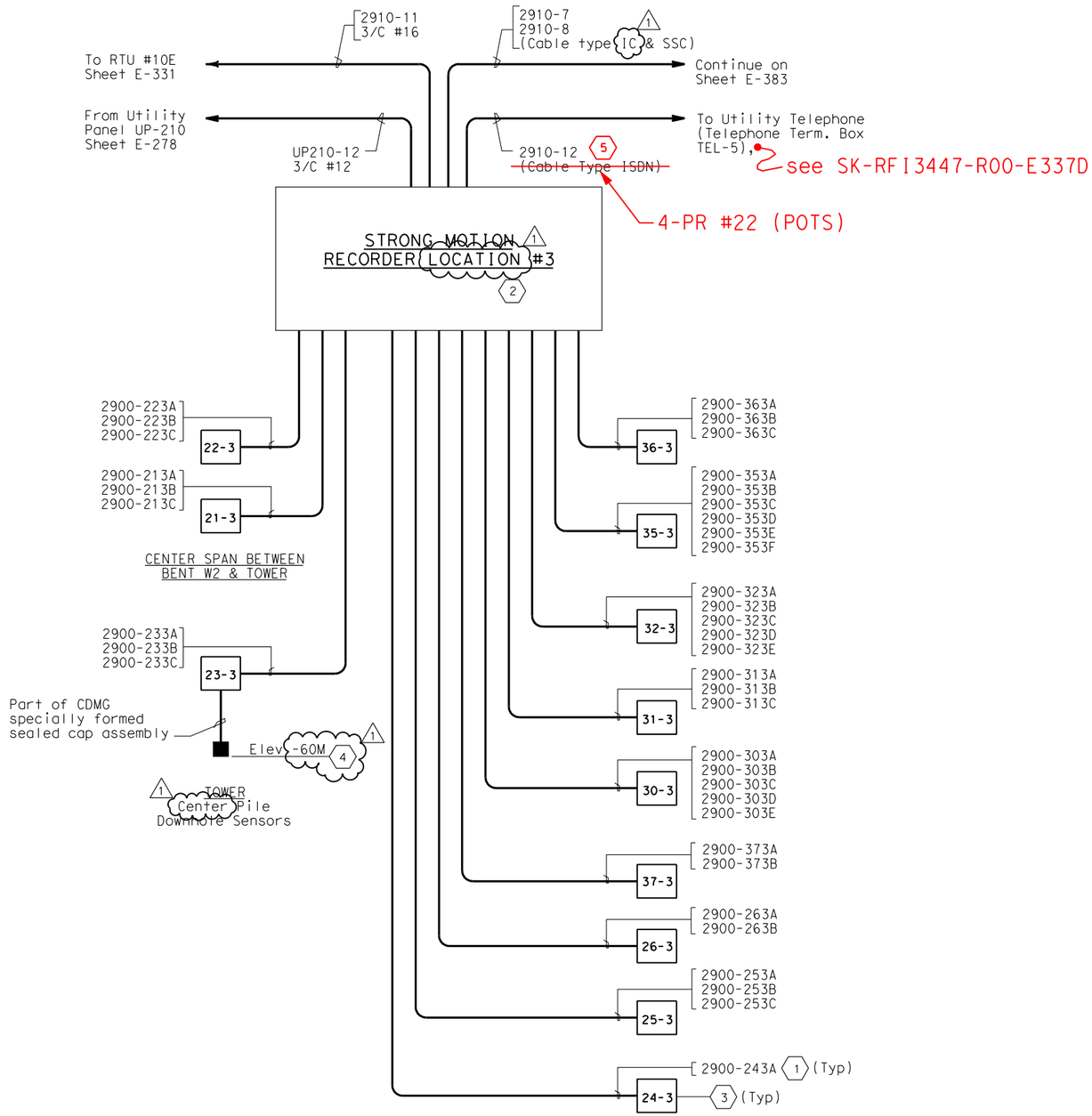

SHEET NOTES:

1. Strong Motion sensor cable Type SSC, unless otherwise indicated.
2. Strong Motion Recorder #3 consists of one 18-channel recorder and two 12-channel recorders, connected to a total of 39 sensors.
3. Sensor enclosure with identification number as shown.
4. Sensor enclosure 23-3 at tower elevation 3M. Sensor orientation assembly at minus 60M. Installation of downhole sensor package and associated cabling by others.
5. Existing cable #2910-12 shall be abandoned in place, labeled spare and unterminated. Cable ends shall be coiled and taped.

NOTES:

1. For other related work not shown on this drawing, see Electrical Special Provisions.
2. References:
   - For general notes of the strong motion detection system, see sheet E-361.
   - For circuit and conduit/cable tray schedules, see sheets starting at E-401.
3. All conduits and fittings located outside or inside pier shall be galvanized rigid steel, PVC coated.
4. Secure enclosure to concrete with manufacturer's recommended mounting and approved by the Engineer.
5. Strong motion recorder #3 located at tower, see sheet E-366.

REGISTERED PROFESSIONAL ENGINEER FADI WALIEDDINE No. 11465 Exp. 12/31/2009 ELECTRICAL STATE OF CALIFORNIA

FOR REVISION ONLY

REQUEST FOR INFORMATION NOT ADDRESSED IN THIS CCO REMAIN IN FORCE

MARK	DATE	DESCRIPTIONS	BY	CH'D	CCO#
1	10/03/08	STRONG MOTION SYSTEM	RG	FW	74
		REVISIONS			

CONTRACT CHANGE ORDER NO._____
SHEET_____ OF _____

DETAILS
STRONG MOTION DETECTION SYSTEM CABLE BLOCK DIAGRAM
NO SCALE

SK-RFI3447R00-E384
R. GARCIA AUGUST 15, 2013

E-384

THIS PLAN IS ACCURATE FOR ELECTRICAL WORK ONLY.

ALL DIMENSIONS ARE IN MILLIMETERS UNLESS OTHERWISE SHOWN.

FOR REDUCED PLANS ORIGINAL SCALE IS IN MILLIMETERS 0 20 40 60 80

DGN FILE =>T:\13103\MS\pse\SAS Struc\CCO\SAS CCO-Strong Motion\04-0120f1_0350R02.dgn
USERNAME =>GarciaR

CU 04251 EA 0120F1

LAST REVISION 00-00-00
DATE PLOTTED => 8/15/2013
TIME PLOTTED => 10:50:40 AM

STATE OF CALIFORNIA - DEPARTMENT OF TRANSPORTATION
Caltrans

DESIGN OVERSIGHT BEHZAD GOLEMOHAMMADI

CALCULATED/DESIGNED BY JW
CHECKED BY -
DATE 02/02
REVISED BY -
DATE REVISED -