DIST	COUNTY	ROUTE	KILOMETER POST TOTAL PROJECT	SHEET No	TOTAL SHEETS
04	SF	80	13.2/13.9	105 S1	1204

REGISTERED ELECTRICAL ENGINEER 8/11/08 DATE

PLANS APPROVAL DATE

FADI WALIEDDINE No. 11465 Exp. 12/31/2009 ELECTRICAL STATE OF CALIFORNIA

PB AMERICAS, Inc.
A Parsons Brinckerhoff Company
303 Second St., Suite 700N
San Francisco, CA 94107-1317

The State of California or its officers or agents shall not be responsible for the accuracy or completeness of electronic copies of this plan sheet.

Caltrans now has a web site! To get to the web site, go to http://www.dot.ca.gov

Caltrans Metric

REQUEST FOR INFORMATION NOT ADDRESSED IN THIS CCO REMAIN IN FORCE

MARK	DATE	DESCRIPTIONS	BY	CH'D	CCO#
0	11/20/09	ELECTRICAL GROUNDING	RR AWG	RG FW	75

REVISIONS

CONTRACT CHANGE ORDER NO. _____
SHEET _____ OF _____

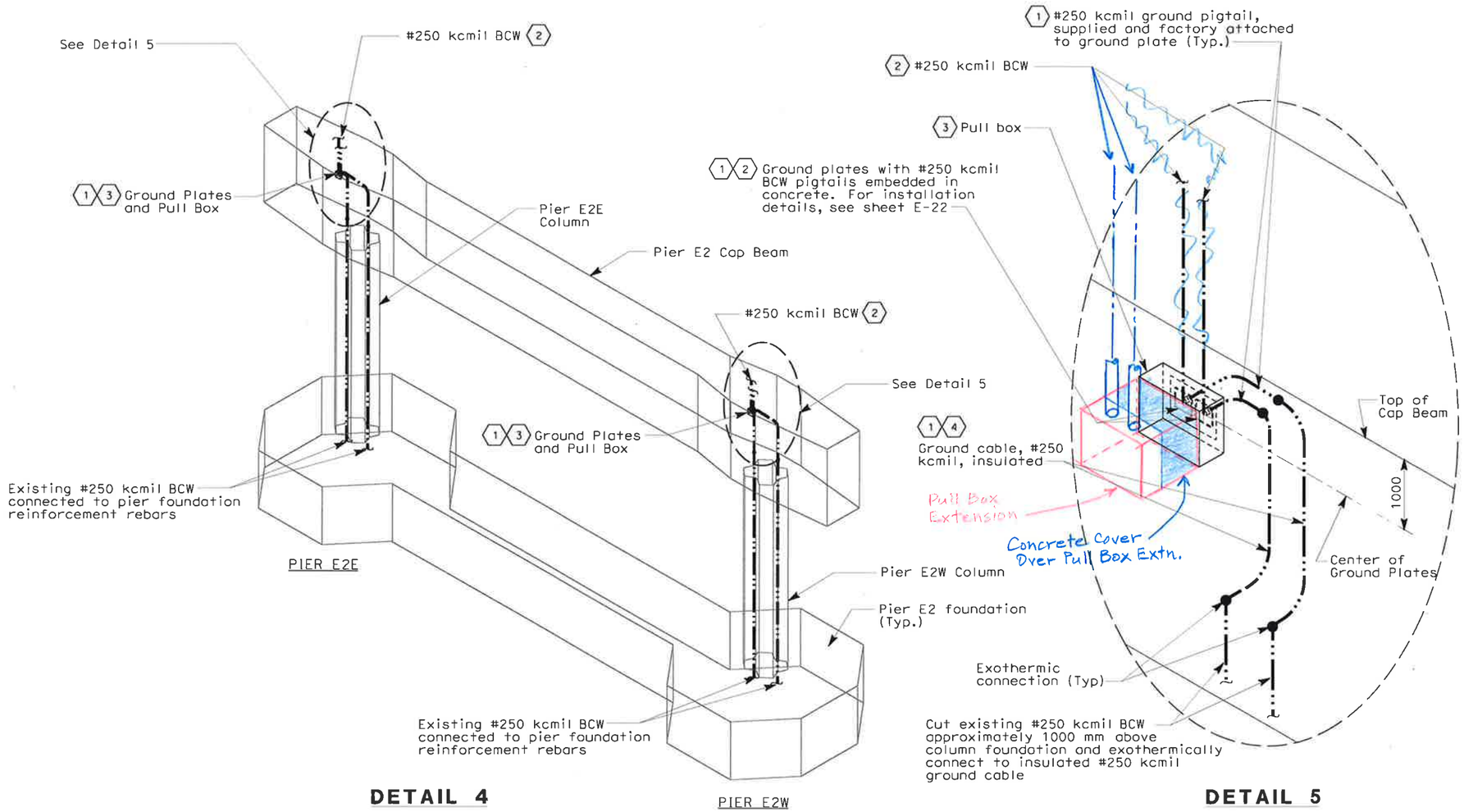

DETAIL 4 **DETAIL 5**

NOTES:

1. Install and exothermically connect #250 kcmil insulated ground cable (2 per column) to the embedded ground plate pigtail located on the east face of cap beam and connect the other end to the existing #250 kcmil BCW that are stub-up above the pier column. Route the insulated ground cable within the cap beam. Use green trace tape if green insulation not available. Secure cable to inside of vertical rebar cage. Contractor to verify insulated ground cable length to suit field condition.
2. Connect each #250 kcmil BCW to ground plates using heavy duty NEMA Type 2 hole copper compression terminal lugs bolted to the plates. Exothermic connection without the lug is also acceptable in lieu of bolt connection. Enclose the #250 kcmil BCW in liquidtight flexible metal conduit when routing up to OBG for connection to #500 kcmil main ground conductor. Typical for Westbound and Eastbound, see sheets E-111 and E-196 respectively.
3. Pull box shall be 305 x 244 x 154 stainless steel NEMA 4X enclosure with cutout in back to protect grounding plates and connections. Box shall be mounted to face of Cap Beam with expansion bolts. Place Neoprene gasket between box and concrete face to inhibit moisture encrosion.
4. Seal exposed bare copper wire (BCW) and exothermic connections with heavy duty splicing tape and vinyl electrical tape.

DETAILS
UNDERGROUND FOUNDATION GROUNDING
NO SCALE

E-22A

STATE OF CALIFORNIA - DEPARTMENT OF TRANSPORTATION
Caltrans

DESIGN OVERSIGHT: BEHZAD GOLEMOHAMMADI

CALCULATED/ DESIGNED BY	AWG	DATE 8/08	REVISED BY
CHECKED BY	RG	8/08	DATE REVISED

DATE PLOTTED = 11/20/2009
TIME PLOTTED = 9:41:34 AM

LAST REVISION 00-00-00

FOR REDUCED PLANS ORIGINAL SCALE IS IN MILLIMETERS 0 20 40 60 80

DGN FILE = t:\13103\MS\pse\SAS Struc\CCO\SAS CC075\2009-11-20 CCO 75 Submittal\04-0120f1_0105501.dgn
USERNAME = garcior

CU 04251 EA 0120F1

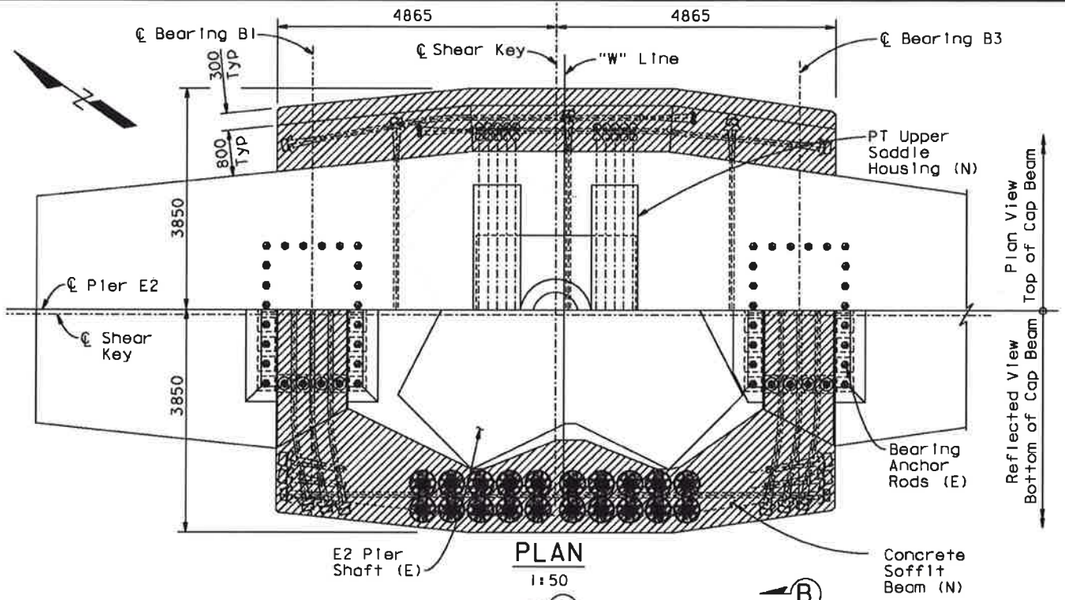

PLAN
1:50

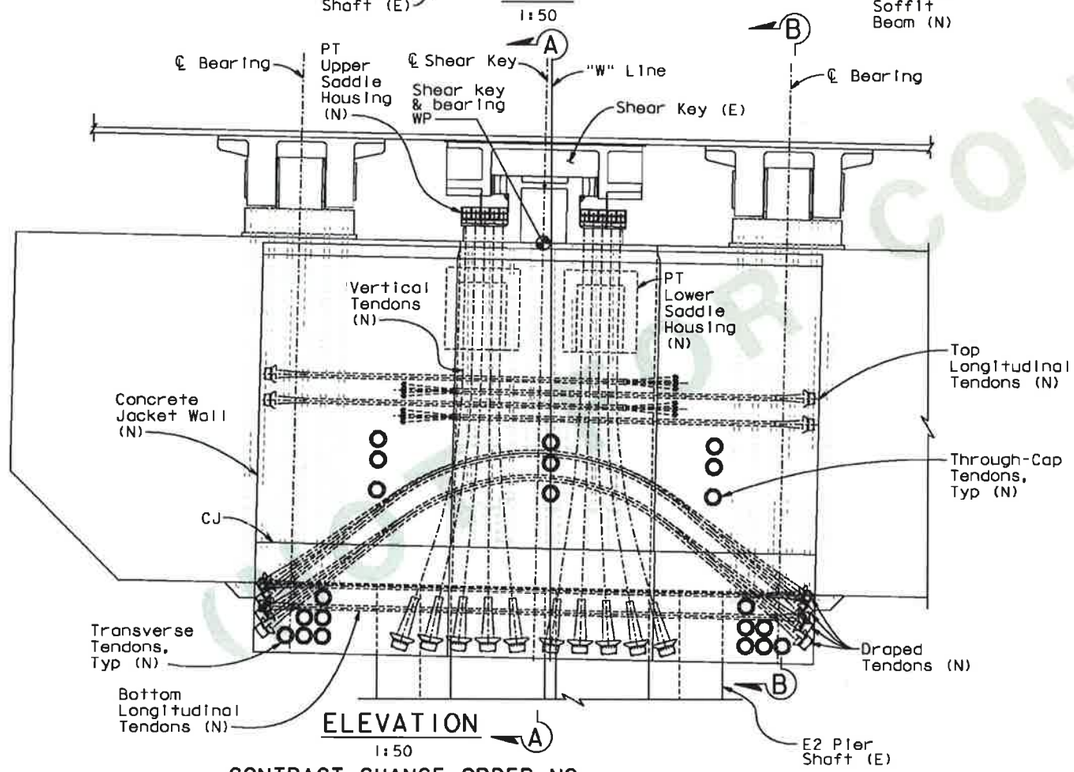

ELEVATION A
1:50

CONTRACT CHANGE ORDER NO. ____
SHEET ___ OF ___

REQUESTS FOR INFORMATION NOT ADDRESSED IN THIS CCO REMAIN IN FORCE

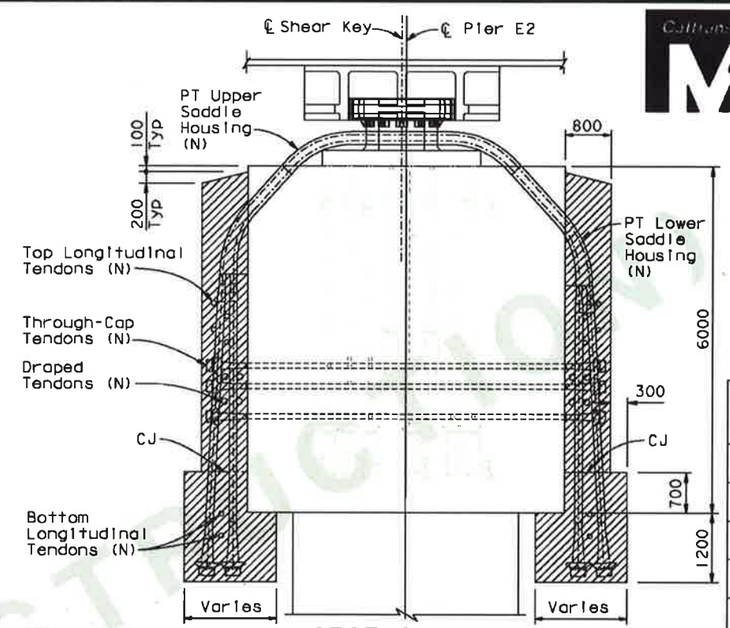

SECTION A-A
1:50

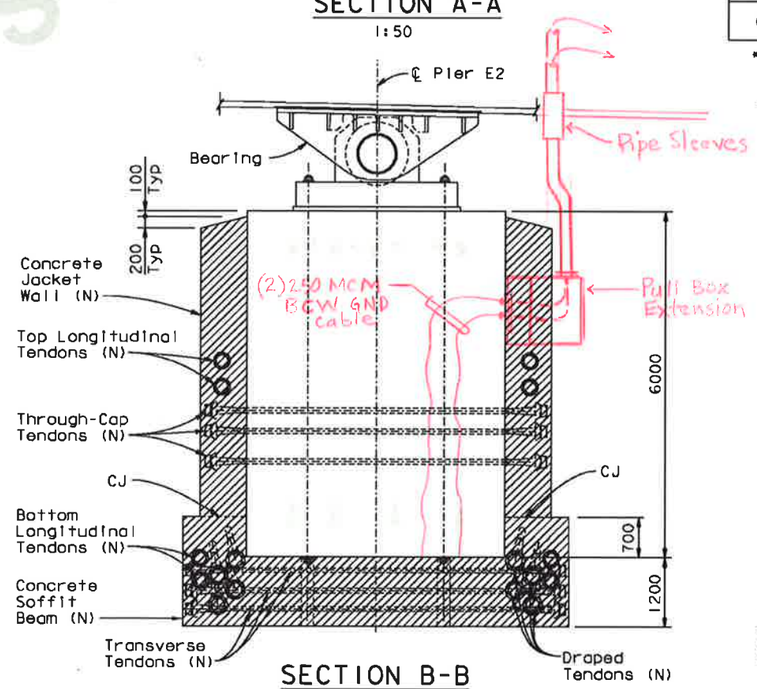

SECTION B-B
1:50

DIST.	COUNTY	ROUTE	KILOMETER POST TOTAL PROJECT	SHEET NO.	TOTAL SHEETS
04	SF	80	13.2/13.9	XXX	1204

REGISTERED ENGINEER - CIVIL
XX-XX-13
PLANS APPROVAL DATE
REGISTERED PROFESSIONAL ENGINEER No. Exp. CIVIL STATE OF CALIFORNIA

The State of California or its officers or agents shall not be responsible for the accuracy or completeness of electronic copies of this plan sheet.

T.Y. LIN / MOFFATT & NICHOL
825 BATTERY STREET
SAN FRANCISCO, CA 94111

Caltrans now has a web site! To get to the web site, go to: http://www.dot.ca.gov

BASELINE: 20 MAY 2013

Post Tensioning Summary

Global Stressing Order	Tendon Group	No. Strands per Tendon	Number of Tendons *
1	Bottom Longitudinal	12	4
2	Transverse	12	12
3	Through-Cap	12	9
4	Top Longitudinal	12	8
5, 7	Draped	19	8
6, 8	Vertical	26	20

* Tendon Count is per Shear Key

Index to Plans

01 General Arrangement
02 Concrete Outlines
03 Vertical PT Geometry
04 Saddle Details No. 1
05 Saddle Details No. 2
06 Saddle Details No. 3
07 Saddle Details No. 4
08 Saddle Details No. 5
09 Saddle Details No. 6
10 PT Details No. 1
11 PT Details No. 2
12 PT Details No. 3
13 PT Details No. 4
14 Reinforcement Details No. 1
15 Reinforcement Details No. 2
16 Reinforcement Details No. 3
17 Reinforcement Details No. 4
18 Reinforcement Details No. 5
19 Construction Details No. 1
20 Construction Details No. 2
21 Construction Details No. 3
22 Construction Details No. 4
23 Construction Details No. 5

Legend:

55 MPa Concrete (N)

(N) New
(E) Existing

75 % PS&E

ALL DIMENSIONS ARE IN MILLIMETERS UNLESS OTHERWISE SHOWN

R. Vallizadeh/V. Taan/Y.L./W.L./F.C.
DESIGN OVERSIGHT
SIGN OFF DATE XX/XX/13

MARK	DATE	DESCRIPTIONS	BY	CH'D	CCO#
0	00/00/13	XXXXXX	XX	XX	XX

REVISIONS

DESIGN	BY X. XXXXX	CHECKED	X. XXXXX
DETAILS	BY X. XXXXX	CHECKED	X. XXXXX
QUANTITIES	BY X. XXXXX	CHECKED	X. XXXXX

PREPARED FOR THE STATE OF CALIFORNIA DEPARTMENT OF TRANSPORTATION

M. Nader
PROJECT ENGINEER

BRIDGE NO. 34-0006L/R
KILOMETER POST 13.2/13.9

SAN FRANCISCO OAKLAND BAY BRIDGE
EAST SPAN SEISMIC SAFETY PROJECT
SELF-ANCHORED SUSPENSION BRIDGE
(SUPERSTRUCTURE & TOWER)

E2 SHEAR KEY ANCHORAGE: GENERAL ARRANGEMENT

Rev. Date: 5-18-98

ORIGINAL SCALE IN MILLIMETERS FOR REDUCED PLANS 0 10 20 30 40 50 60 70 80 90 100

CU 04
EA 0120F1

DISREGARD PRINTS BEARING EARLIER REVISION DATES

REVISION DATES (PRELIMINARY STAGE ONLY)

SHEET 1 OF

FILE => L:\BB\04-012001\SAS\RFI Updates\Engineer Update Sketches\sh e2 shear keys retrofit\Alternative C2\01.dgn

USERNAME => PHUQ DATE PLOTTED => 20 MAY 2013 TIME PLOTTED => 23:21:21

CONSTRUCTION

DIST.	COUNTY	ROUTE	KILOMETER POST TOTAL PROJECT	SHEET NO.	TOTAL SHEETS
04	SF	80	13.2/13.9	XXX	1204

REGISTERED ENGINEER - CIVIL

XX-XX-13

PLANS APPROVAL DATE

REGISTERED PROFESSIONAL ENGINEER No. Exp. CIVIL STATE OF CALIFORNIA

The State of California or its officers or agents shall not be responsible for the accuracy or completeness of electronic copies of this plan sheet.

T.Y. LIN / MOFFATT & NICHOL
825 BATTERY STREET
SAN FRANCISCO, CA 94111

Caltrans now has a web site! To get to the web site, go to: http://www.dot.ca.gov

BASELINE: 20 MAY 2013

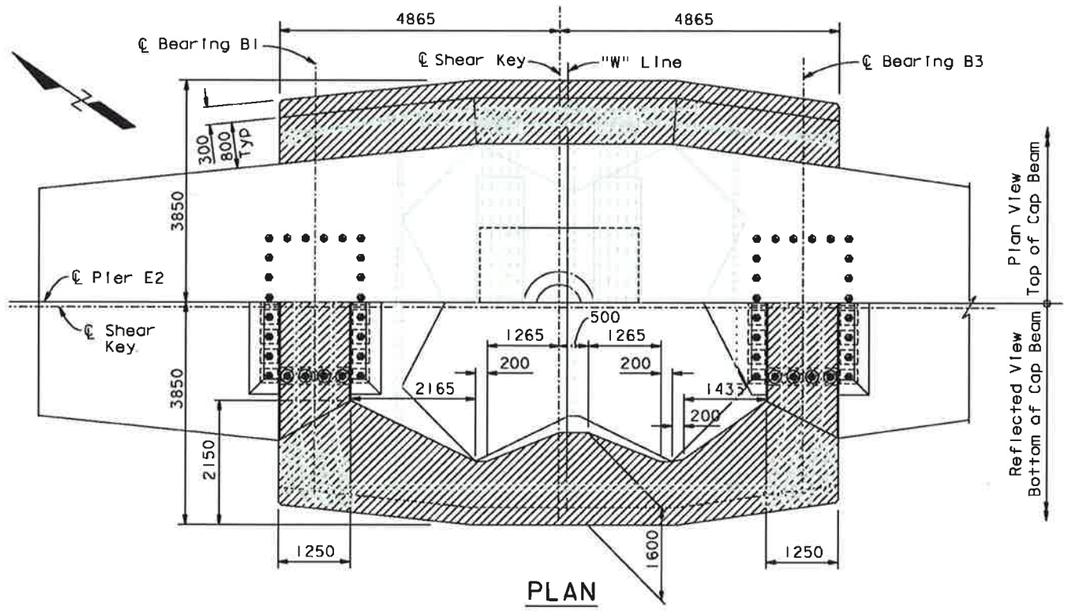

PLAN
1:50

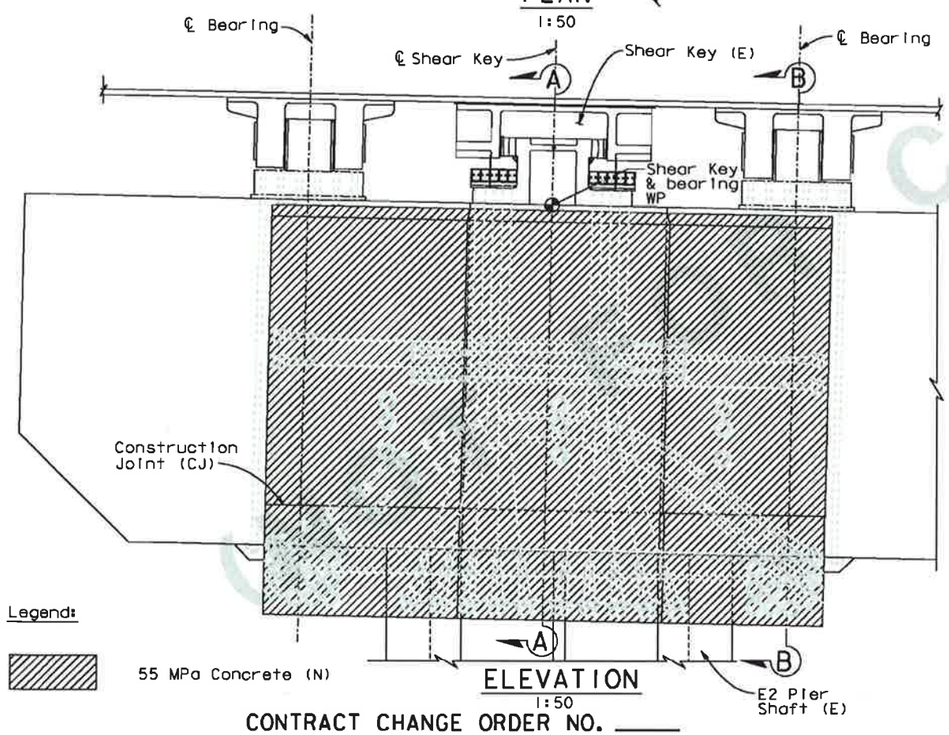

ELEVATION
1:50

Legend:

55 MPa Concrete (N)

CONTRACT CHANGE ORDER NO. ____
SHEET ___ OF ___

REQUESTS FOR INFORMATION NOT ADDRESSED IN THIS CCO REMAIN IN FORCE

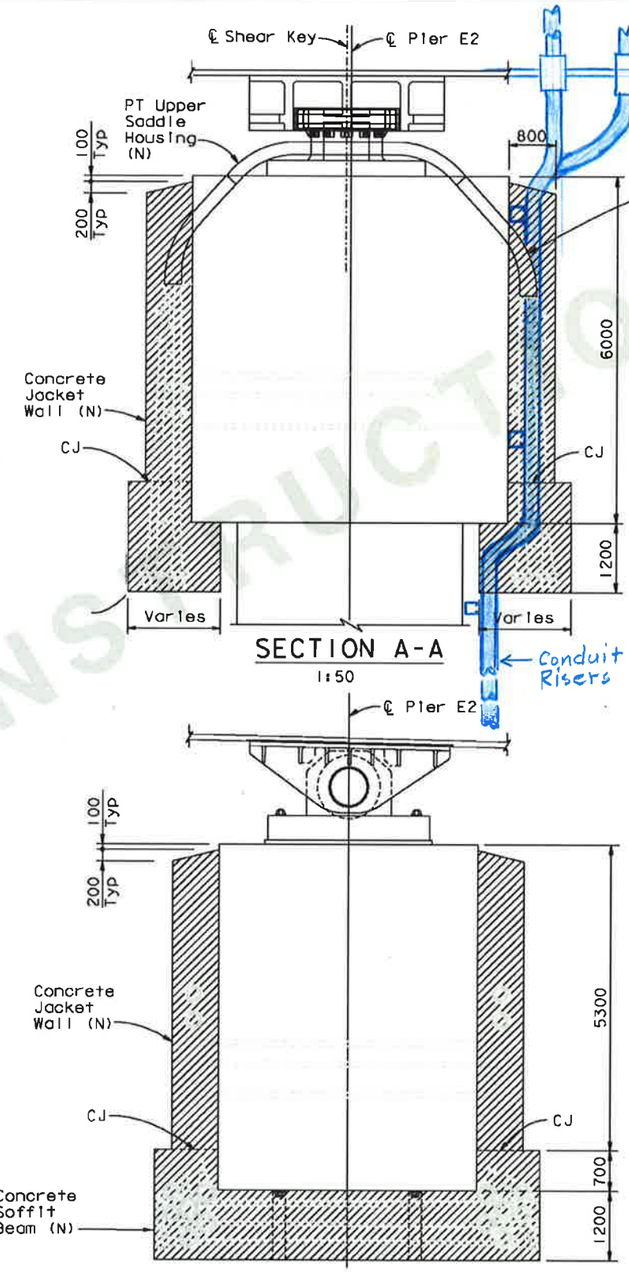

SECTION A-A
1:50

SECTION B-B
1:50

General Notes:

1. Design: CalTrans Bridge Design Specification and AASHTO Guide Specifications for LRFD Seismic Design, 2nd edition.
2. Existing Conditions: Dimensions shown are taken from original design drawings. The Contractor shall determine and establish all dimensions and details necessary for the completion of all work by field measurement and survey.
3. All plan dimensions along longitudinal axis of cap beam are given at 2% slope to true horizontal.
4. Structural Steel: All structural plate shall conform to the requirements of ASTM A 709M Grade 345 unless noted otherwise.
5. Welding: All welding shall comply with the provisions of the AASHTO / AWS Bridge Welding Code (ANSI / AASHTO / AWS D 1.5).
6. Design clearances require that the Shear Key Bushing and Housing Assembly be fabricated in two horizontal pieces.
7. Existing shear key/new shim plates/new support plates to be prepared to near-white finish. Class B coating.
8. Coating: All exposed structural steel and components shall be coated with the project specified epoxy coating system.
9. Prestressing strands shall conform to ASTM A416. 15mm low relaxation, 7-wire strands with ultimate strength Fu = 1860 MPa. All post tensioning shall be jacked to 75% of Fu. Design assumes that 600T multi-strand rams will be used.
10. A minimum compressive strength of 36 MPa (f'ci) shall be attained in the concrete prior to stressing.
11. Ducts shall be grouted with high strength non-shrink grout (f'c = 55 MPa).
12. Reinforced Concrete: f'c = 55 MPa.
13. Mild steel reinforcement shall comply with ASTM A706 - fy = 415 MPa, fu = 738 MPa.
14. Pourable chocking compound (Chockfast or similar) may be applied on designated surfaces to provide uniform bearing.
15. Drill & bond dowels with an approved epoxy adhesive anchor system.

ALL DIMENSIONS ARE IN MILLIMETERS UNLESS OTHERWISE SHOWN

MARK	DATE	DESCRIPTIONS	BY	CH'D	CCO#
0	00/XX/13	XXXXXX	XX	XX	XX

REVISIONS

R. Vallizadeh/V. Taan/Y.L./W.L./F.C.
DESIGN OVERSIGHT
SIGN OFF DATE XX/XX/13

DESIGN	BY X. XXXXX	CHECKED	X. XXXXX
DETAILS	BY X. XXXXX	CHECKED	X. XXXXX
QUANTITIES	BY X. XXXXX	CHECKED	X. XXXXX

PREPARED FOR THE STATE OF CALIFORNIA DEPARTMENT OF TRANSPORTATION

M. Nader
PROJECT ENGINEER

BRIDGE NO. 34-0006L/R
KILOMETER POST 13.2/13.9

SAN FRANCISCO OAKLAND BAY BRIDGE
EAST SPAN SEISMIC SAFETY PROJECT
SELF-ANCHORED SUSPENSION BRIDGE
(SUPERSTRUCTURE & TOWER)

E2 SHEAR KEY ANCHORAGE: CONCRETE OUTLINES

Rev. Date: 5-18-98

ORIGINAL SCALE IN MILLIMETERS FOR REDUCED PLANS 0 10 20 30 40 50 60 70 80 90 100

CU 04
EA 0120F1

DISREGARD PRINTS BEARING EARLIER REVISION DATES

REVISION DATES (PRELIMINARY STAGE ONLY)

SHEET 2 OF

FILE => I:\bb\04-0120f1\sas\rfi updates\engineer update sketches\sh e2 shear keys retrofit\alternative c2\02.dgn

75 % PS&E

DATE PLOTTED => 20 MAY 2013 TIME PLOTTED => 23:22:48

USERNAME => PHUQ

CONSTRUCTION