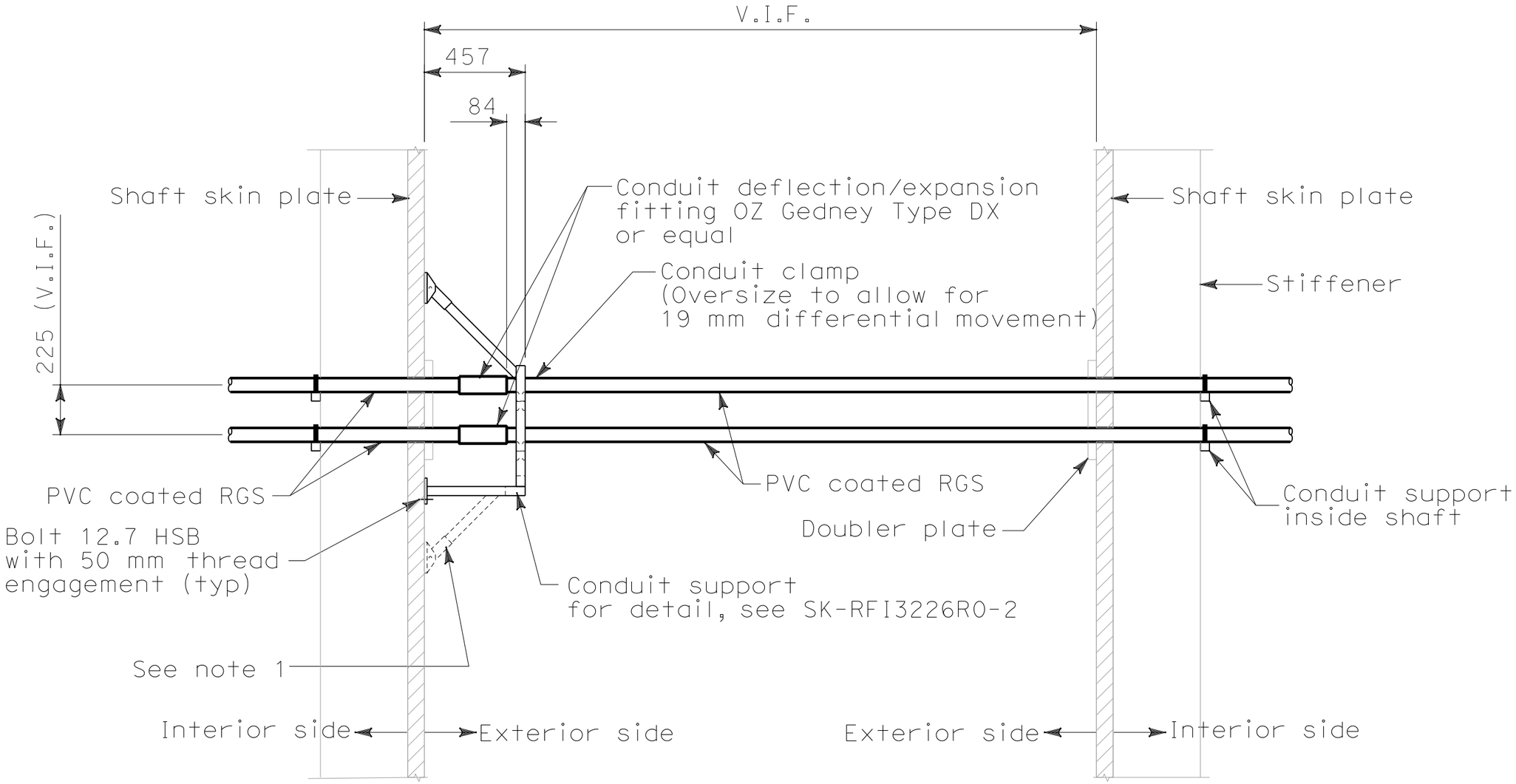

PROPOSED CONDUIT INSTALLATION BETWEEN TOWER SHAFT

NOTE:

1. Contractor may install the adjustable brace fitting at the bottom if it is not feasible to mount the brace at top. Contractor shall maintain an overhead clearance under the brace per OSHA requirements or as directed by Caltrans in field.

SK-RFI3226R0-1

R. GARCIA March 22, 2013

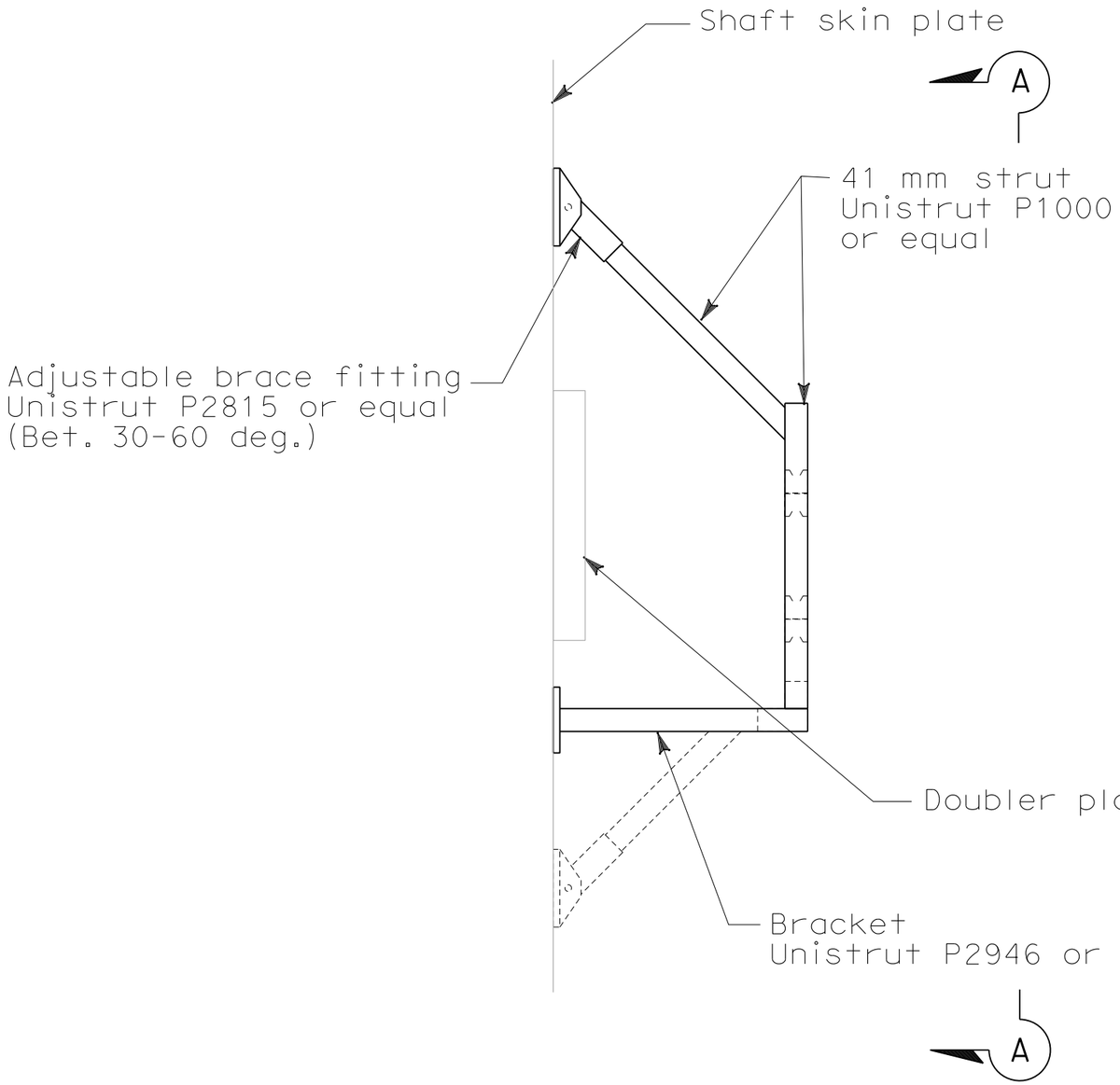

ELEVATION VIEW

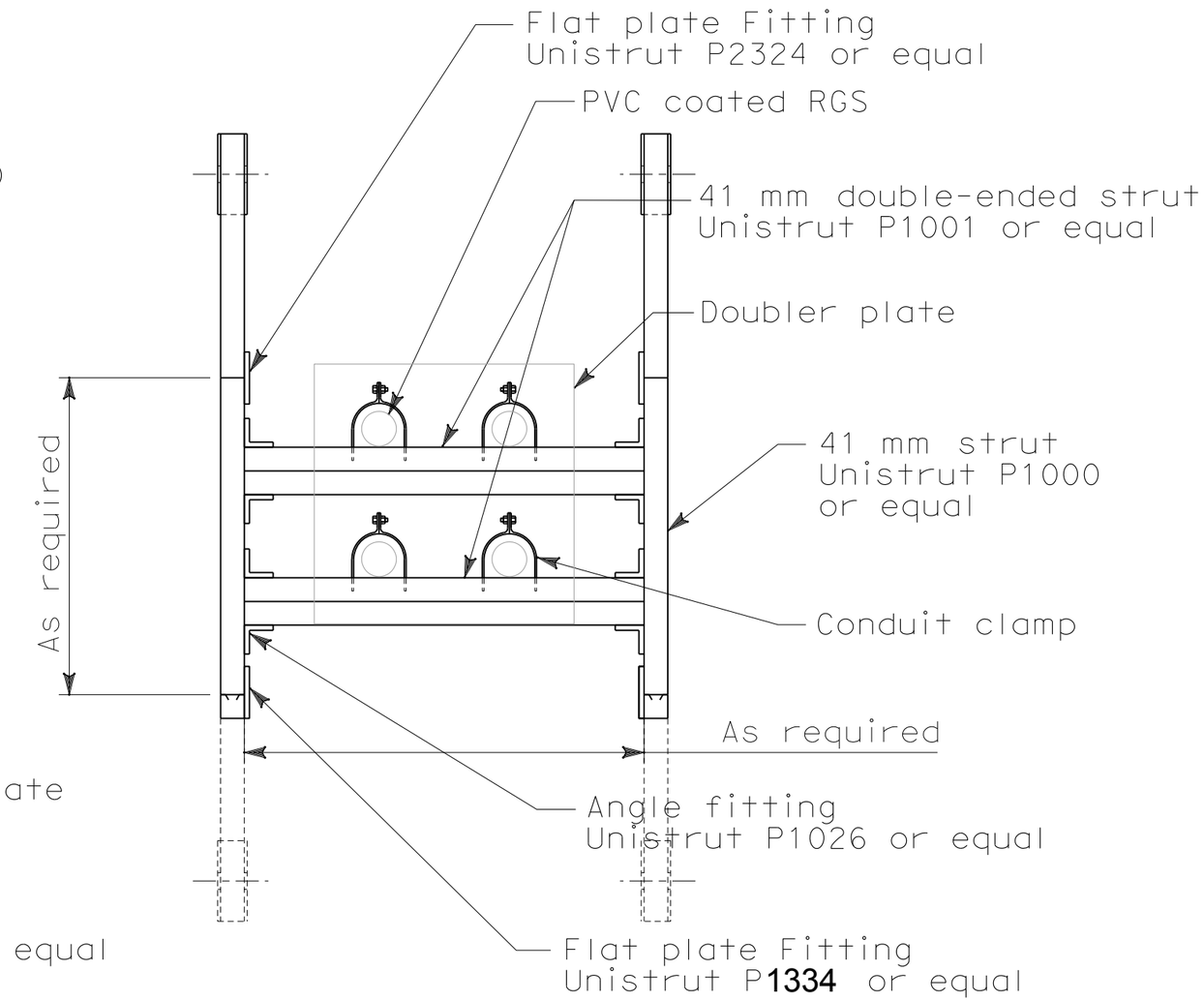

SECTION A-A

PROPOSED CONDUIT SUPPORT

SK-RFI3226R0-2

R. GARCIA March 22, 2013

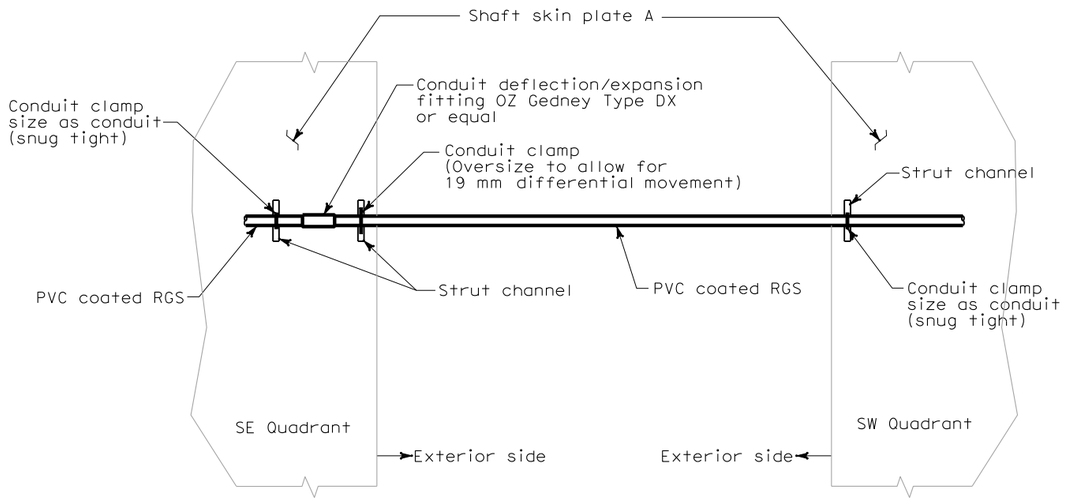

DETAIL 1

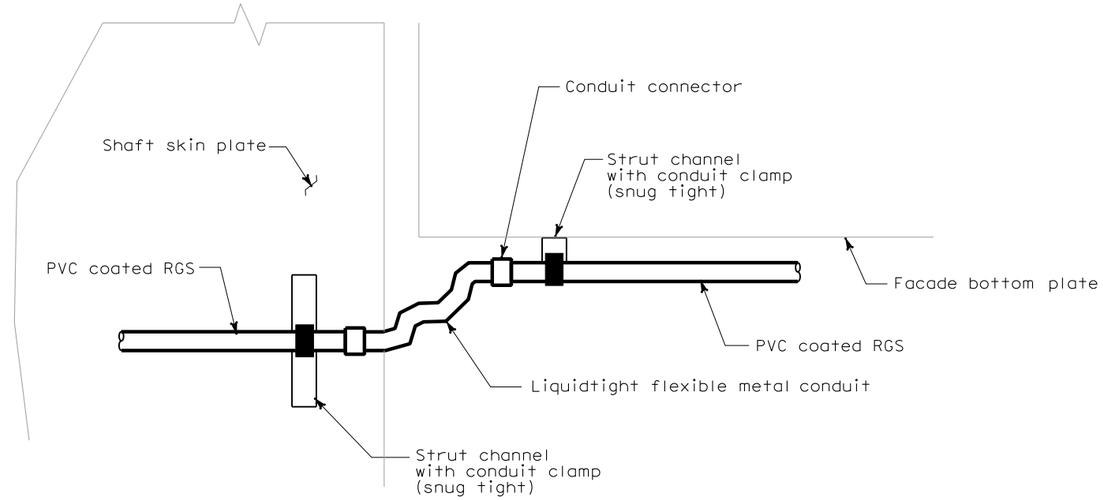

DETAIL 2

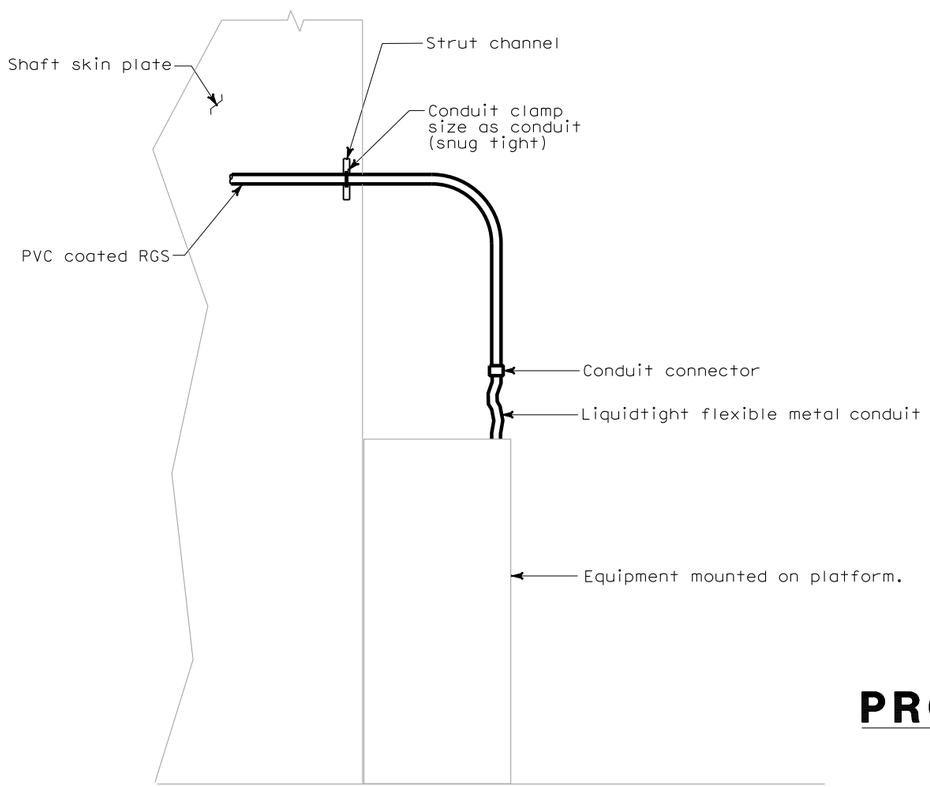

DETAIL 3

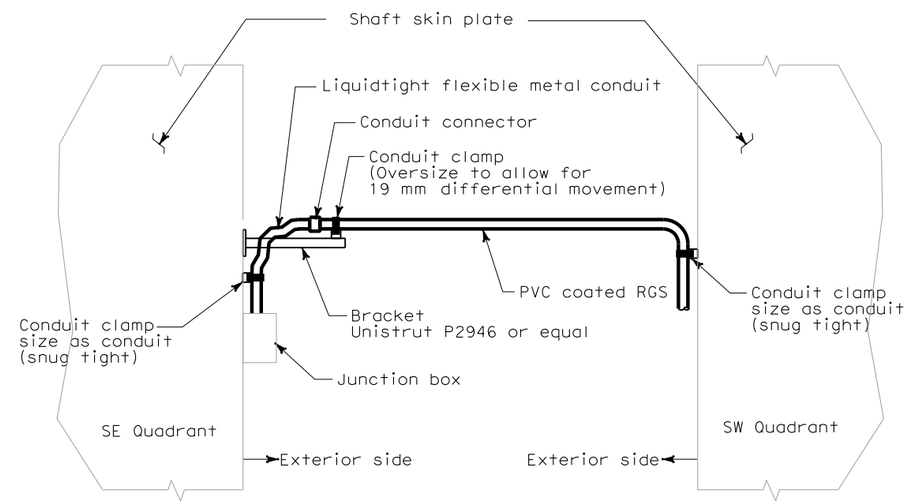

DETAIL 4

PROPOSED CONDUIT INSTALLATION
SURFACE MOUNT

SK-RFI3226R0-3

R. GARCIA March 22, 2013

RFI3226RO ATTACHMENT 1/6 R. Garcia 3/18/13

P1000®

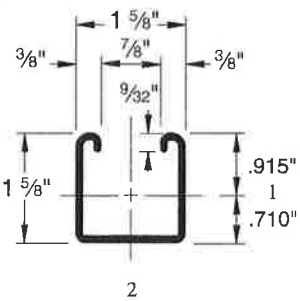

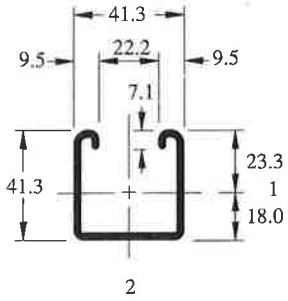

Wt/100 Ft:189 Lbs (281 kg/100 m)
Allowable Moment 5,070 In-Lbs (570 N•m)
12 Gauge Nominal Thickness .105" (2.7mm)

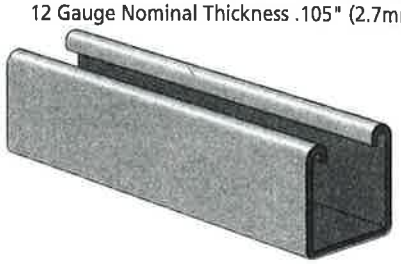

P1001

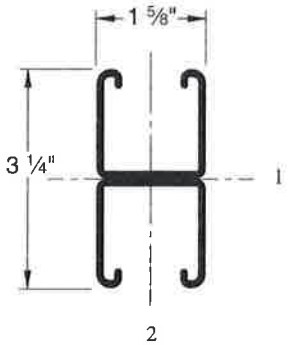

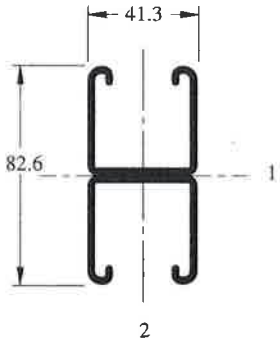

Wt/100 Ft: 378 Lbs (562 kg/100 m)
Allowable Moment 14,360 In-Lbs (1,620 N•m)
12 Gauge Nominal Thickness .105" (2.7mm)

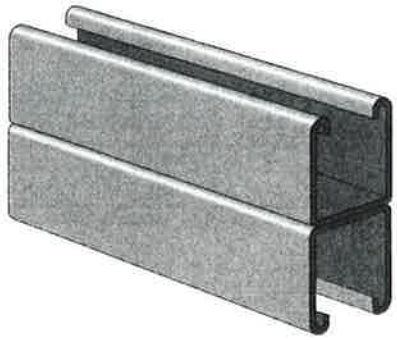

P1000 DS

Wt/100 Ft: 173 Lbs (257 kg/100 m)

Slots are 2 3/4" (69.9) x 7/8" (22.2)
3 1/2" (88.9) on Center

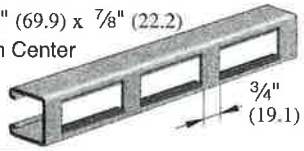

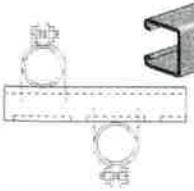

Pipe Clamps can be Mounted on Both Sides

P1000 H3

Wt/100 Ft: 175 Lbs (260 kg/100 m)

9/16" (14.3) Dia. Holes
1 7/8" (47.6) on Center

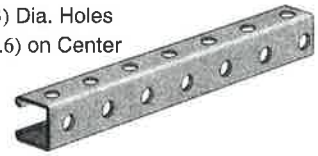

P1000 HS

Wt/100 Ft:185 Lbs (275 kg/100 m)

9/16" (14.3) Dia. Holes
1 7/8" (47.6) on Center

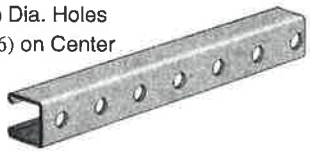

P1000 KO

Wt/100 Ft: 190 Lbs (283 kg/100 m)

7/8" (22.2) Knockouts
6" (152.4) on Center

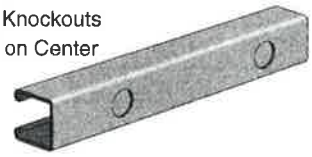

P1000 SL

Wt/100 Ft: 185 Lbs (275 kg/100 m)

Slots are 3" (76.2) x 13/32" (10.3)
4" (101.6) on Center

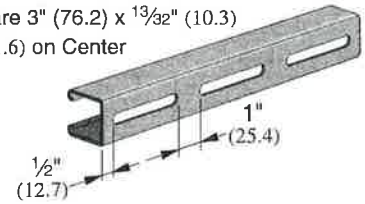

P1000 T

Wt/100 Ft: 185 Lbs (275 kg/100 m)

Slots are 1 1/8" (28.6) x 9/16" (14.3)
2" (51) on Center

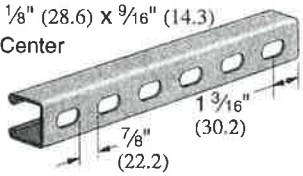

Channel Nuts (Refer to Hardware Section for Details)

P1006-0832
P1006-1024
P1006-1420
P1007
P1008
P1009
P1010

P1008T
P1006T1420
P1010T

P1024
P1012S
P1023S

P1012
P1023
P1024S

P3006-0832
P3006-1024
P3006-1420
P3007
P3008
P3009
P3010

P3016-0632
P3016-0832
P3016-1024
P3016-1420

Channel Finishes: PL, GR, HG, PG; Standard Lengths: 10' & 20'

RFI 3226 R0 ATTACHMENT 2/6

P2324

Wt/100 pcs: 75 Lbs (34.0 kg)

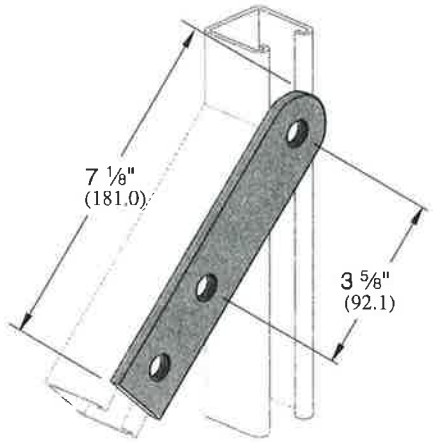

P1066

Wt/100 pcs: 56 Lbs (25.4 kg)

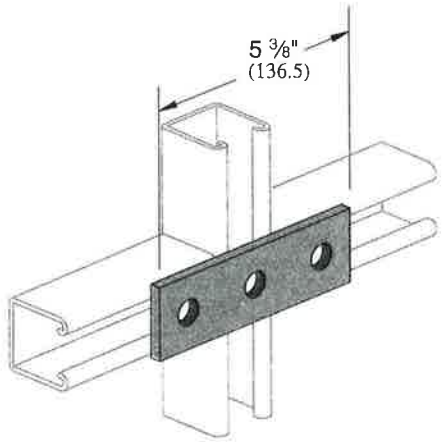

P1925

Wt/100 pcs: 50 Lbs (22.7 kg)

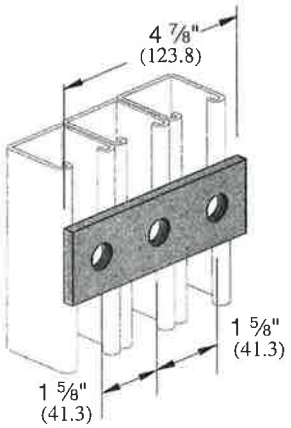

P1067

Wt/100 pcs: 78 Lbs (35.4 kg)

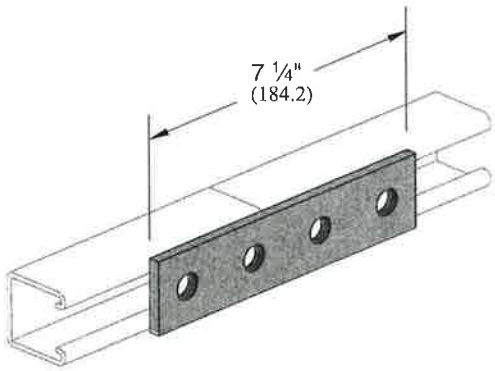

P2079

Wt/100 pcs: 73 Lbs (33.1 kg)

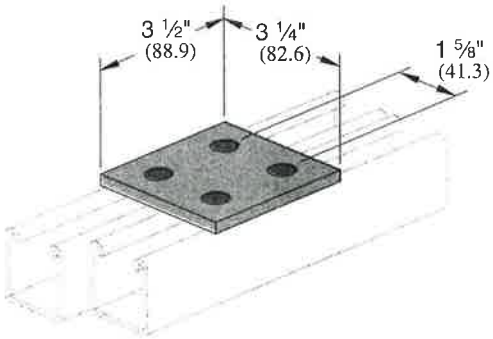

P1941

Wt/100 pcs: 94 Lbs (42.6 kg)

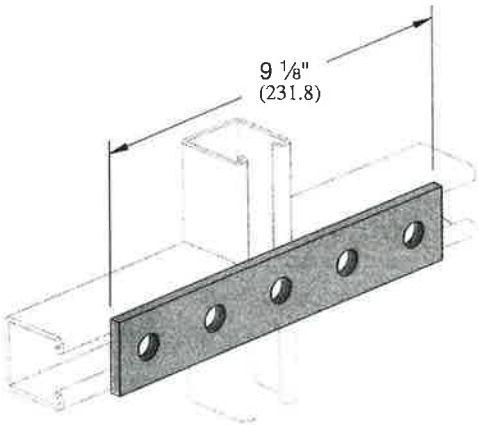

Standard Dimensions for 1⅝" (41 mm) width series channel fittings (Unless Otherwise Shown on Drawing)

Hole Diameter: 9/16" (14.3mm); **Hole Spacing - From End:** 13/16" (20.6 mm); **Hole Spacing - On Center:** 1⅞" (47.6 mm); **Width:** 1⅝"(41mm); **Thickness:** ¼" (6.4mm)

RFI 3226 RO ATTACHMENT 3/6

P1036

Wt/100 pcs: 58 Lbs (26.3 kg)

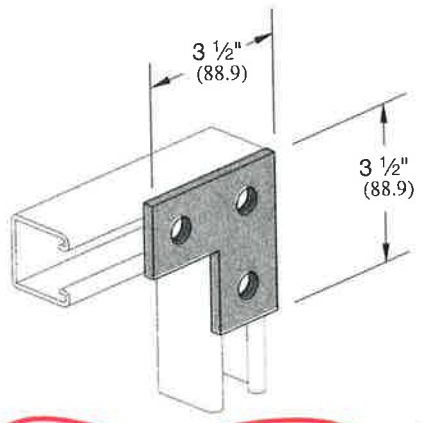

P1380 A

Wt/100 pcs: 80 Lbs (36.3 kg)

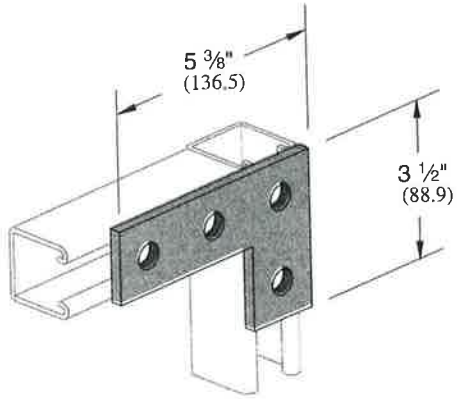

P1334

Wt/100 pcs: 70 Lbs (31.8 kg)

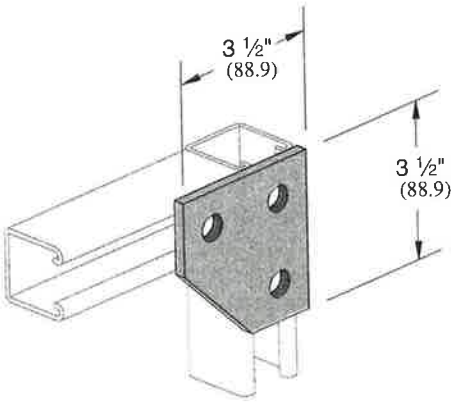

P1380

Wt/100 pcs: 105 Lbs (47.6 kg)

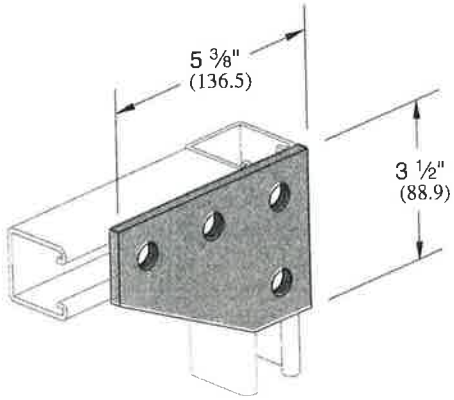

P1873

Wt/100 pcs: 150 Lbs (68.0 kg)

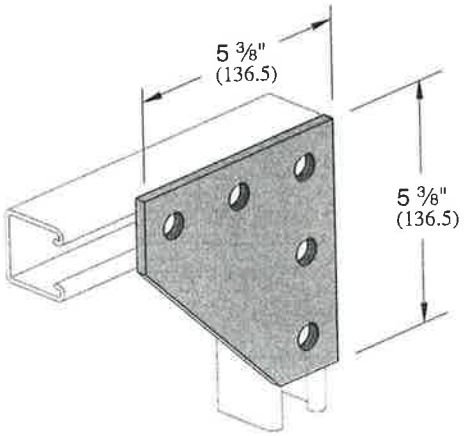

P1031

Wt/100 pcs: 80 Lbs (36.3 kg)

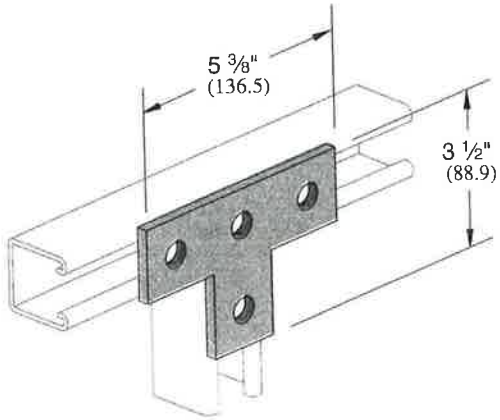

Standard Dimensions for 1⅝" (41 mm) width series channel fittings *(Unless Otherwise Shown on Drawing)*

Hole Diameter: 9/16" (14.3mm); **Hole Spacing - From End:** 13/16" (20.6 mm); **Hole Spacing - On Center:** 1⅞" (47.6 mm); **Width:** 1⅝"(41mm); **Thickness:** ¼" (6.4mm)

RFI3226RO ATTACHMENT 4/6

1⅝" Channel
Telestrut System
Nuts & Hardware
General Fittings
Pipe/Conduit Supports
Electrical Fittings
Concrete Inserts
1⅝" Framing System
1⅝" Framing System
Fiberglass System
Special Metals
Prime&Style System
Product Index

P1962

Wt/100 pcs: 112 Lbs (50.8 kg)

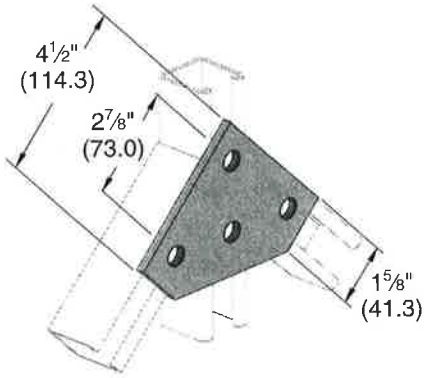

P2626

Wt/100 pcs: 40 Lbs (18.1 kg)

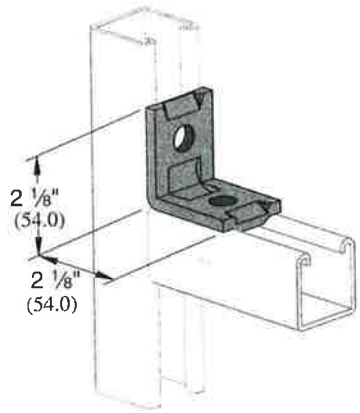

P1026

Wt/100 pcs: 38 Lbs (17.2 kg)

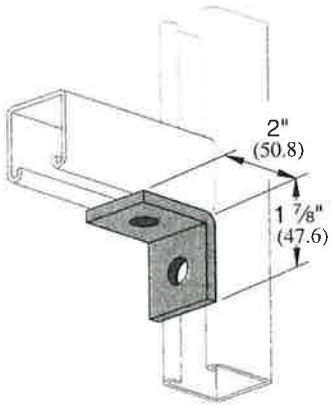

P1723

Wt/100 pcs: 34 Lbs (15.4 kg)

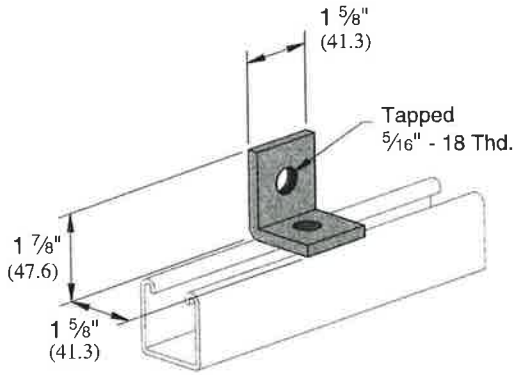

P1068

Wt/100 pcs: 38 Lbs (17.2 kg)

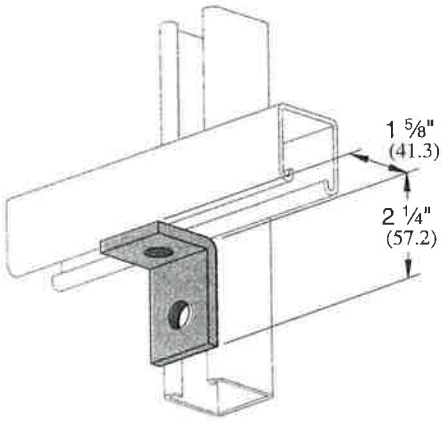

P1281, P1282, P1283

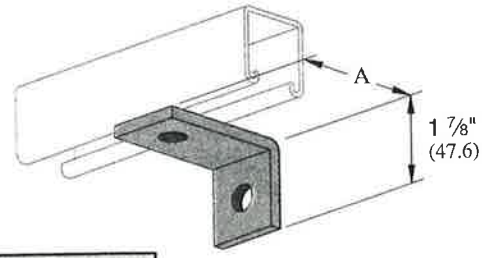

Part Number	"A" In *(mm)*	Wt/100 pcs Lbs *(kg)*
P1281	3 *76.2*	49 *22.2*
P1282	3½ *88.9*	54 *24.5*
P1283	4 *101.6*	61 *27.7*

Standard Dimensions for 1⅝" (41 mm) width series channel fittings *(Unless Otherwise Shown on Drawing)*

Hole Diameter: ⁹⁄₁₆" (14.3mm); **Hole Spacing - From End:** ¹³⁄₁₆" (20.6 mm); **Hole Spacing - On Center:** 1⅞" (47.6 mm); **Width:** 1⅝"(41mm); **Thickness:** ¼" (6.4mm)

RFI 3226RO ATTACHMENT 5/6

P2547 thru P2551 Cable Tray Bracket

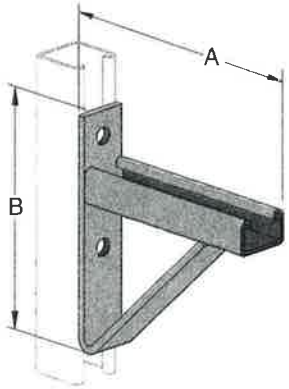

Part Number	"A" In *(mm)*	"B" In *(mm)*	Wt/100 pcs Lbs *(kg)*	Uniform Load* Lbs *(kg)*
P2547	15 *381.0*	8¾ *222.3*	420 *190.5*	1,000 *453.6*
P2548	21 *533.4*	8¾ *222.3*	628 *284.9*	1,000 *453.6*
P2549	27 *685.8*	11¼ *285.8*	860 *390.1*	900 *408.2*
P2550	33 *838.2*	11¼ *285.8*	1010 *458.1*	900 *408.2*
P2551	39 *990.6*	16 *406.4*	1257 *683.3*	800 *362.9*

P2944, P2945, P2946, P2947

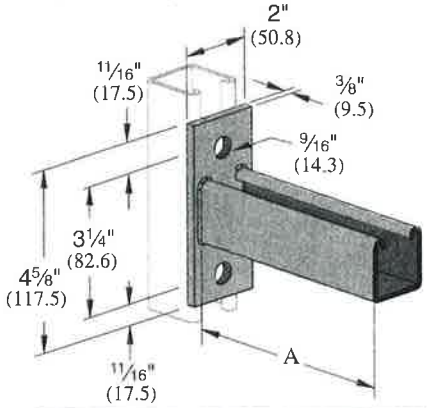

Part Number	"A" In *(mm)*	Wt/100 pcs Lbs *(kg)*	Uniform Load* Lbs *(kg)*
P2944	6 *152.4*	185 *83.9*	1200 *544.3*
P2945	12 *304.8*	293 *132.9*	600 *272.2*
P2946	18 *457.2*	401 *181.9*	400 *181.4*
P2947	24 *609.6*	509 *230.9*	300 *136.1*

Safety Factor 2½
* Mounted on 12 Ga. Channel

P2542 thru P2546

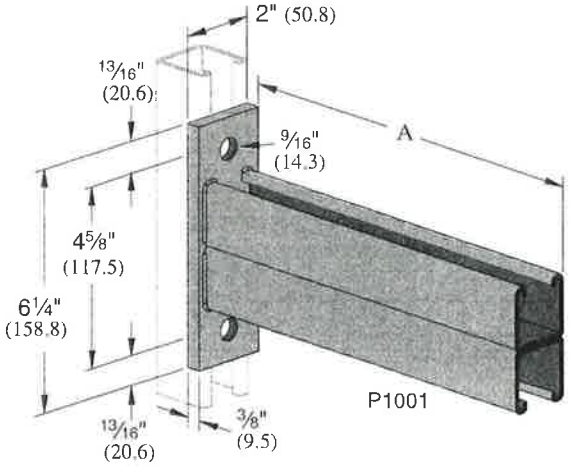

Part Number	"A" In *(mm)*	Wt/100 pcs Lbs *(kg)*	Vertical Channel Part No.	Vertical Channel Gauge	Uniform Design Load Lbs *(kg)*
P2542	12 *304.8*	502 *227.7*	P1000	12	2,000 *907.2*
			P1100	14	1,400 *635.0*
			P2000	16	1,000 *453.6*
P2543	18 *457.2*	692 *313.9*	P1000	12	1,300 *589.7*
			P1100	14	900 *408.2*
			P2000	16	650 *294.8*
P2544	24 *609.6*	882 *400.1*	P1000	12	1,000 *453.6*
			P1100	14	700 *317.5*
			P2000	16	500 *226.8*
P2545	30 *762.0*	1,072 *486.3*	P1000	12	800 *362.9*
			P1100	14	560 *254.0*
			P2000	16	400 *181.4*
P2546	36 *914.4*	1,262 *572.4*	P1000	12	650 *294.8*
			P1100	14	450 *204.1*
			P2000	16	320 *145.1*

Note

When used for mechanical supports, load capacities of brackets and fittings should be in compliance with the American Standard Code for Pressure Piping.

RF13226RO ATTACHMENT 6/6

P2459-36 thru P2459-96

Tubular Back Braces

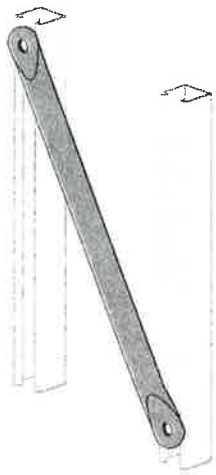

Part Number	"A" In *(mm)*	Wt/100 pcs Lbs *(kg)*
P2459-36	36 *914.4*	255 *115.7*
P2459-42	42 *1,066.8*	296 *134.3*
P2459-48	48 *1,219.2*	336 *152.4*
P2459-54	54 *1,371.6*	377 *171.0*
P2459-60	60 *1,524.0*	418 *189.6*
P2459-72	72 *1,828.8*	499 *226.3*
P2459-84	84 *2,133.6*	580 *263.1*
P2459-96	96 *2,438.4*	661 *299.3*

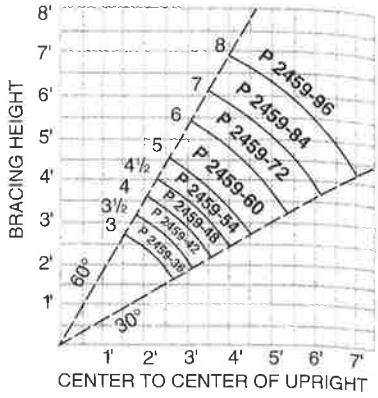

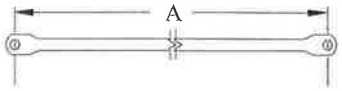

1. The vertical lines of the graph correspond to the center to center line dimension of the uprights.
2. Along this vertical line locate the (maximum usable) horizontal bracing height line.
3. The arc line that intersects the point formed by the intersection of the two lines, indicates the brace required.
4. 60° - 30° maximum, minimum brace angles are indicated for maximum effect.

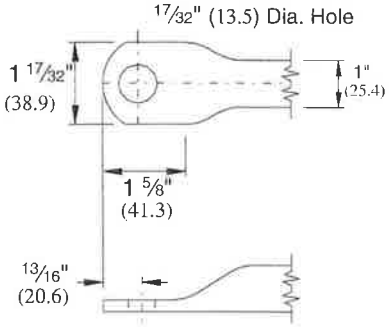

P2815 Adjustable Brace Fitting

Wt/100 pcs: 307 Lbs (139.3 kg)

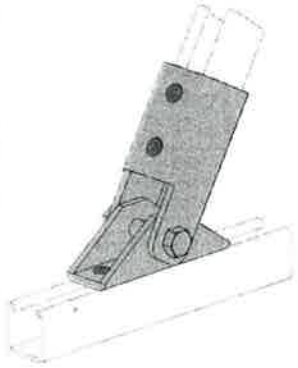

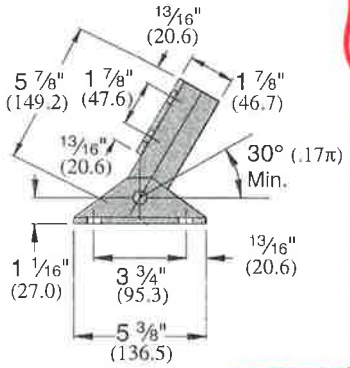

P2815D Adjustable Brace Fitting

Wt/100 pcs: 497 Lbs (225.4 kg)

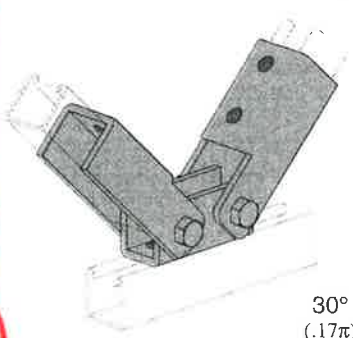

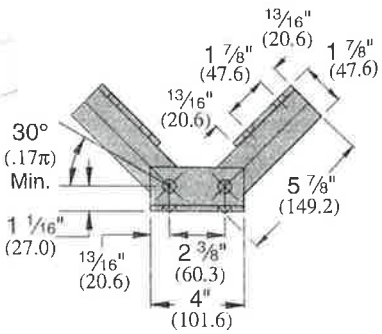

Note

When used for mechanical supports, load capacities of brackets and fittings should be in compliance with the American Standard Code for Pressure Piping.

Deflection/Expansion Fittings

For Rigid Metal Conduit & IMC

Type DX

Use:
To compensate for movement in any direction between two conduit ends which they connect. Type DX fittings will withstand occasional vibration transmitted to conduit by rotating equipment or vehicular traffic.

These fittings will provide for a movement of ¾" from the normal in all directions. Where they are used for angular movement they will allow for a deflection of 30° from the normal in any direction.

Fittings may be used with PVC conduit by using standard adapters in each end.

Features:
- Watertight (NEMA 4)
- Raintight
- Concretetight

Material:
End Couplings - Bronze
Sleeve - Neoprene
Bands - Stainless Steel
Bonding Jumper - Tinned Copper Braid

Third Party Certification:
UL Listed: E-11853

CSA Certified: 11584

Applicable Third Party Standards:
UL Standard: 514B
CSA Standard: C22.2 No. 18
Fed. Spec: W-F-408E
NEMA: FB-1

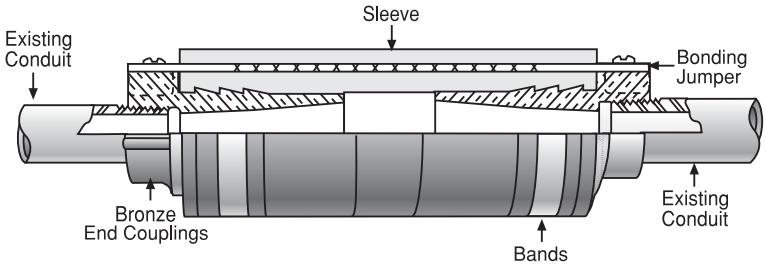

Type DX

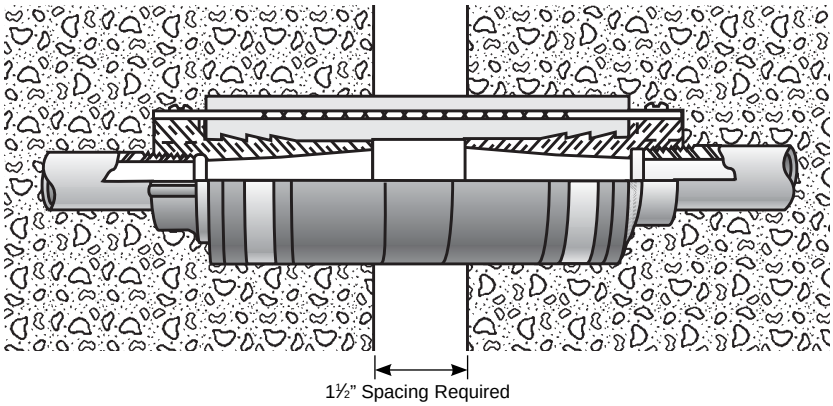

Trade Size (inches)	Catalog Number	Dimensions in Inches Max. Dia.	Overall Length
½	DX-50	2¼	6¾
¾	DX-75	2½	6¾
1	DX-100	2¾	7
1¼	DX-125	3⅛	7¼
1½	DX-150	3⅛	7¼
2	DX-200	3⅞	8⅞
2½	DX-250	4⅜	8½
3	DX-300	5	8½
3½	DX-350	5¾	9¼
4	DX-400	6¼	9¼
5	DX-500	7¼	9⅜
6	DX-600	8¼	9⅜

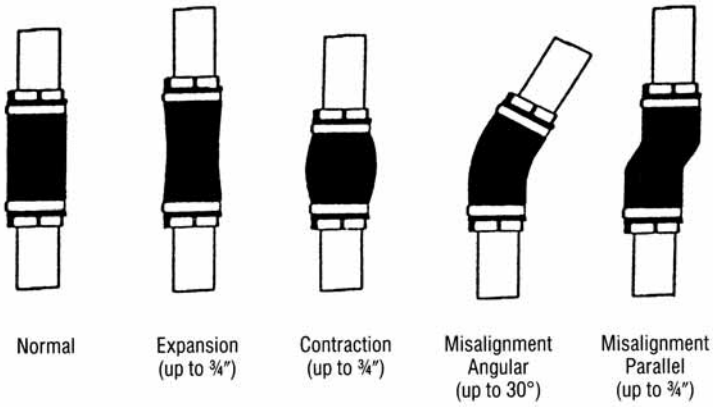

Copyright 2007