DIST	COUNTY	ROUTE	KILOMETER POST TOTAL PROJECT	SHEET No	TOTAL SHEETS
04	SF	80	13.2/13.9	155 R3	1204

REGISTERED ELECTRICAL ENGINEER DATE

PLANS APPROVAL DATE

REGISTERED PROFESSIONAL ENGINEER — No. — Exp. ELECTRICAL — STATE OF CALIFORNIA

PB POWER, Inc.
A Parsons Brinckerhoff Company
303 Second St., Suite 700N
San Francisco, CA 94107-1317

The State of California or its officers or agents shall not be responsible for the accuracy or completeness of electronic copies of this plan sheet.

Caltrans now has a web site! To get to the web site, go to http://www.dot.ca.gov

DESIGN OVERSIGHT	CALCULATED/ DESIGNED BY	DATE	REVISED BY	DATE REVISED
BEHZAD GOLEMOHAMMADI	CHECKED BY	CVF 12/03	EJL	1/04
		EJL	EJL	2/04

STATE OF CALIFORNIA - DEPARTMENT OF TRANSPORTATION — Caltrans

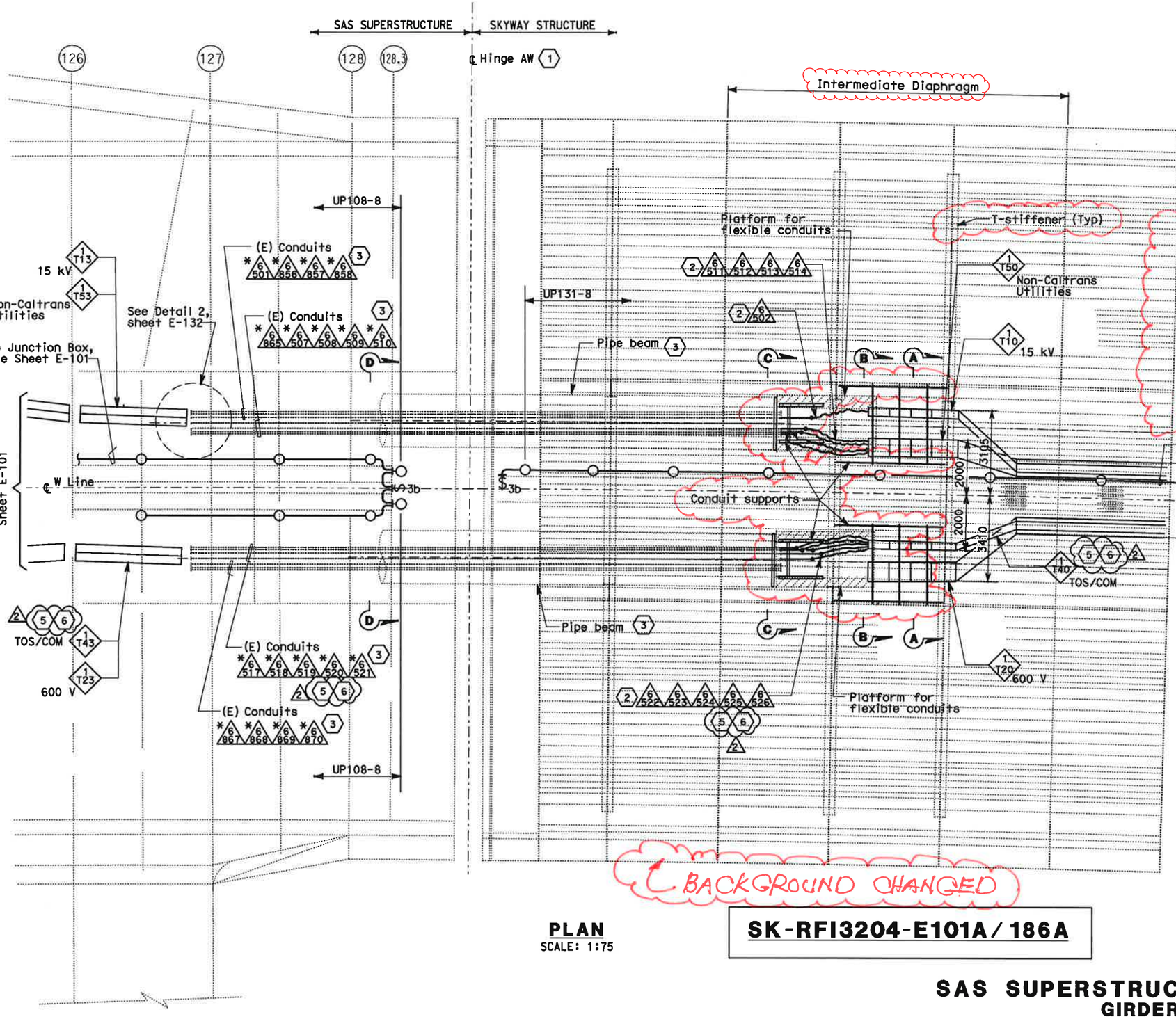

PLAN
SCALE: 1:75

SK-RFI3204-E101A/186A

SHEET NOTES:

1. Hinge AW electrical design is based on the maximum expansion joint movement opening of 1243 mm.
2. Arrange and group the flexible 103 mm conduits to maintain a minimum voltage level separation of 460 mm between systems.
3. Existing conduits (*) inside pipe beam are supplied in Skyway contract.
4. Terminate conduit to the next lighting fixture and splice wiring to circuit UP131-8 of Skyway Structure. Contractor to adjust as required.
5. Furnish and install 4-25.4 mm innerducts inside TOS/COM conduits (*6520, 6525) and 1-25.4 mm innerduct per BASE fiber optic cable in TOS/COM cable tray.
6. Furnish and install BASE fiber optic cable in innerduct inside TOS/COM conduit and cable tray. See sheet E-1100.

NOTES:

1. Minimum radius of cable tray fittings shall be 610 mm.
2. Minimum radius of 103 mm conduit bends shall be 610 mm.
3. Cables/circuits passing through the hinge locations shall be provided with cable identification tag at both ends of Hinge.
4. For additional work related not shown on this drawing, see Electrical Special Provisions.
5. Section A-A and B-B see sheet E-132B.
6. Section C-C and Section D-D, see sheet E-132C.

REQUEST FOR INFORMATION NOT ADDRESSED IN THIS CCO REMAIN IN FORCE

MARK	DATE	DESCRIPTIONS	BY	CH'D	CCO#
		REVISIONS			
2	03/01/11	BASE INTEGRATION	RSB	WB	150
1	02/25/08	CABLE TRAY CHANGES	JD	RG SE	42S1

CONTRACT CHANGE ORDER NO._____
SHEET _____ OF _____

SAS SUPERSTRUCTURE AND SKYWAY STRUCTURE
GIRDER INTERFACE WESTBOUND

AS NOTED

THIS PLAN IS ACCURATE FOR ELECTRICAL WORK ONLY. 1 2

ALL DIMENSIONS ARE IN MILLIMETERS UNLESS OTHERWISE SHOWN

FOR REDUCED PLANS ORIGINAL 0 20 40 60 80 DGN FILE =>SK-RFI3204-E101A.dgn

LAST REVISION DATE PLOTTED => 18-MAR-2013

E-101A

DIST	COUNTY	ROUTE	KILOMETER POST TOTAL PROJECT	SHEET No	TOTAL SHEETS
04	SF	80	13.2/13.9	185	1204

REGISTERED ELECTRICAL ENGINEER 2/6/04 DATE

12-6-04
PLANS APPROVAL DATE

PB POWER, Inc.
A Parsons Brinckerhoff Company
303 Second St., Suite 700N
San Francisco, CA 94107-1317

REGISTERED PROFESSIONAL ENGINEER JENS ERLINGSSON No. 8249 Exp. 9/30/06 ELECTRICAL STATE OF CALIFORNIA

The State of California or its officers or agents shall not be responsible for the accuracy or completeness of electronic copies of this plan sheet.

Caltrans now has a web site! To get to the web site, go to http://www.dot.ca.gov

Caltrans Metrio

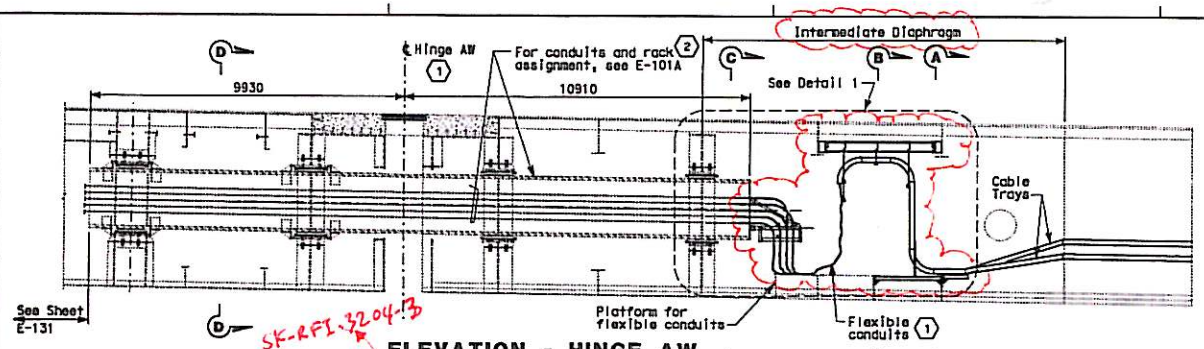

SK-RFI-3204-13

ELEVATION - HINGE AW

AT CENTERLINE OF PIPE BEAM
SCALE 1:75

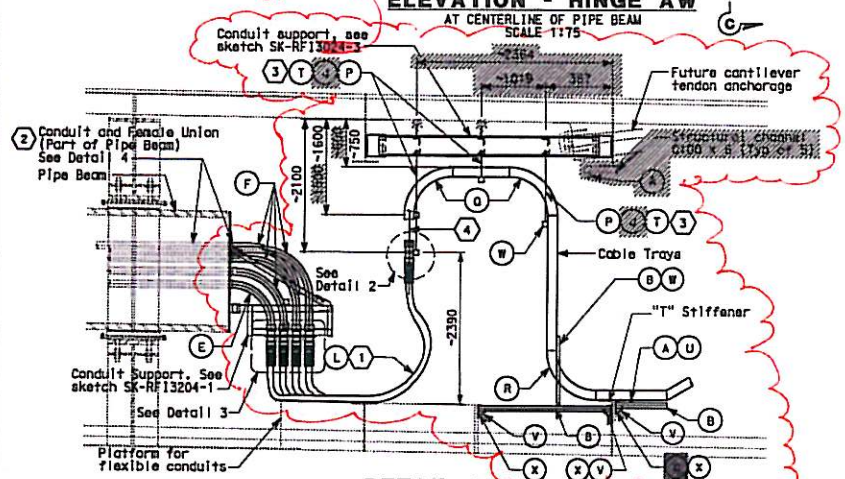

DETAIL 1

SCALE 1:40

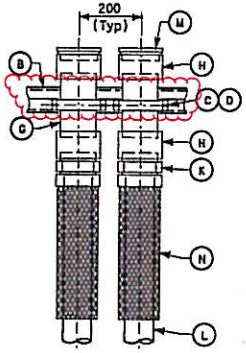

DETAIL 2

NO SCALE

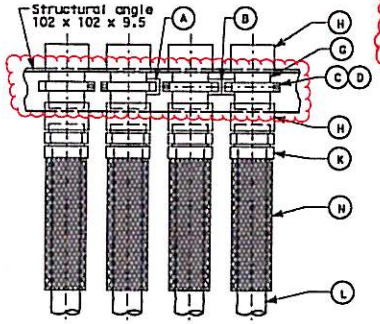

DETAIL 3

NO SCALE

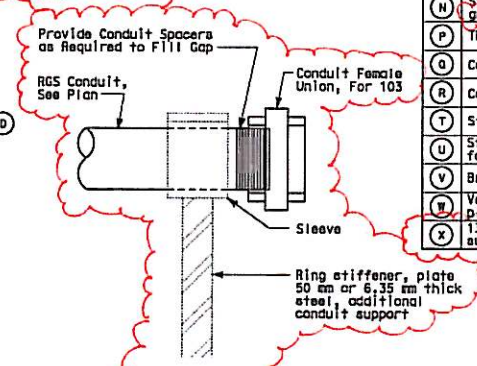

DETAIL 4

NO SCALE

TYPICAL CONDUIT END SUPPORT AT PIPE BEAM

MATERIAL LIST

Item No.	Description
A	Strut channel 41 mm x 41 mm
B	Strut channel combination 41 mm x 82 mm
C	Strut channel spring nut, lockwasher and hex bolt
D	Strut channel conduit clamp for 103 mm
E	Conduit elbow for 103 mm (Radius= 610 mm)
F	Conduit elbow for 103 mm (Radius= 752 mm)
G	Conduit nipple, 103 mm
H	Conduit coupling, 103 mm
J	Swivel ceiling flange DELETED
K	Connector, straight liquidtight flexible conduit for 103 mm
L	Liquidtight flexible conduit, 103 mm
M	Insulated bushed nipple for 103 mm conduit
N	Strain relief grips or AMTEC conduit riser grip for flexible conduit, 103 mm
P	Threaded steel hanger rod, 12 mm diameter
Q	Cable tray vertical outside bend
R	Cable tray vertical inside bend
T	Strut channel spring nut, tee-head bolt
U	Strut channel cable tray clamp for ladder or solid bottom tray
V	Bracket for 82 mm X 82 mm Strut Channel
W	Vertical tray hanger with splice plate hardware (bolted to side rail)
X	13ø Bolt thru 'T' stiffener web/platform support w/ nut and washer

SHEET NOTES:

1. Hinge AW electrical design is based on the maximum expansion joint movement opening of 1243 mm.
2. Conduits through pipe beam shall be part of the pipe beam assembly. Conduit shall be welded together to form a continuous conduit inside the pipe beam, length as specified. The weld shall be smooth on the outside and free of burrs inside the conduit. Conduit fittings, like coupling, etc. to form a continuous conduit shall not be permitted as alternative. Pipe beam supplied by Skyway Structure.

   The intent of the conduit design is to be able to remove the entire length of conduit inside the pipe beam, in case maintenance is required inside the pipe beam assembly.
3. Cable tray hangers shall be located to provide working space in front of Cantilever tendon anchorage. Field to adjust location accordingly, additional supports as required.
4. All cable/cables entering the liquidtight conduits from the cable trays shall be provided with strain relief cable/cables grips or AMTEC conduit riser grip attached from the vertical cable tray rungs.

NOTES:

1. Minimum radius of cable tray fittings shall be 610 mm.
2. Minimum radius of 103 mm conduit bends shall be 610 mm.
3. Cables/circuits passing through the hinge locations shall be provided with cable identification tag at both ends of Hinge.
4. For additional work related not shown on this drawing, see Electrical Special Provisions.
5. For Sections A-A and B-B, see sheet E-132B.
6. Sections C-C and D-D, see sheet E-132C.

SK-RFI3204-E132A/221A

DETAILS
SAS SUPERSTRUCTURE AND SKYWAY STRUCTURE GIRDER INTERFACE WESTBOUND HINGE AW

SCALE AS NOTED

E-132A

STATE OF CALIFORNIA - DEPARTMENT OF TRANSPORTATION
Caltrans

DESIGN OVERSIGHT: BEHZAD GOLEMOHAMMADI
CALCULATED/DESIGNED BY: CYF DATE 12/03
CHECKED BY: EJL DATE 1/04
REVISED BY: EJL DATE REVISED 2/04

FOR REDUCED PLANS ORIGINAL 0 20 40 60 80 DGN FILE =>SK-RFI3204-E132A.dgn

LAST REVISION DATE PLOTTED => 18-MAR-2013

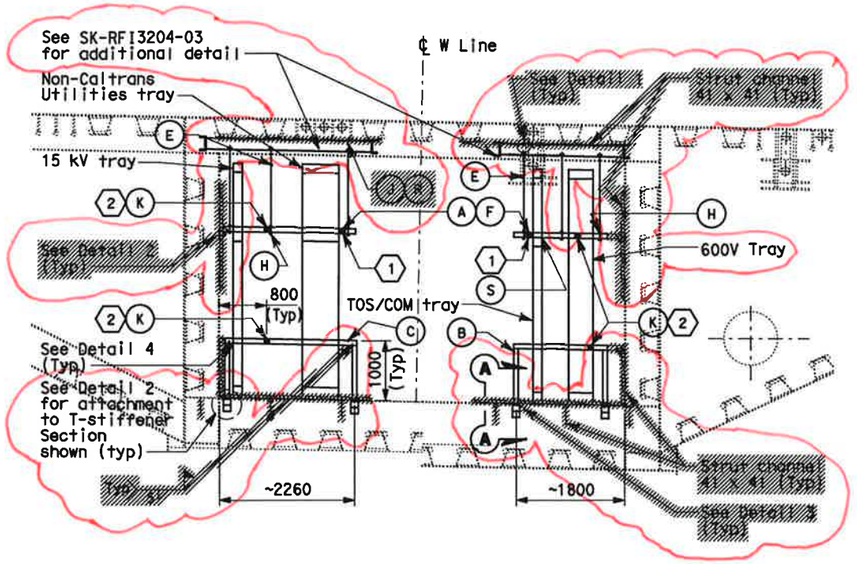

SECTION A-A
SCALE 1:50

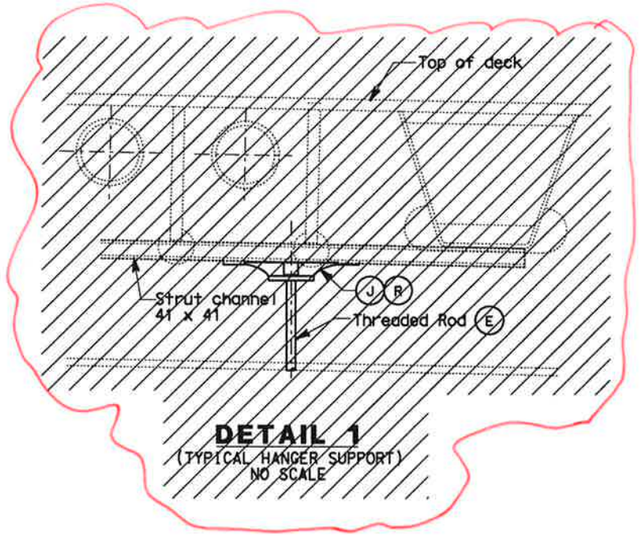

DETAIL 1
(TYPICAL HANGER SUPPORT)
NO SCALE

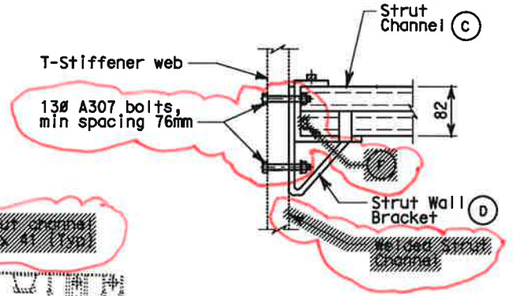

DETAIL 2
(TYPICAL WALL BRACKET TRAY SUPPORT)
SCALE 1:5

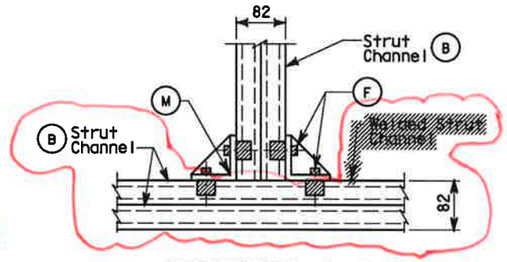

SECTION A-A
DETAIL 3
(TYPICAL FLOOR BRACKET SUPPORT)
SCALE 1:5

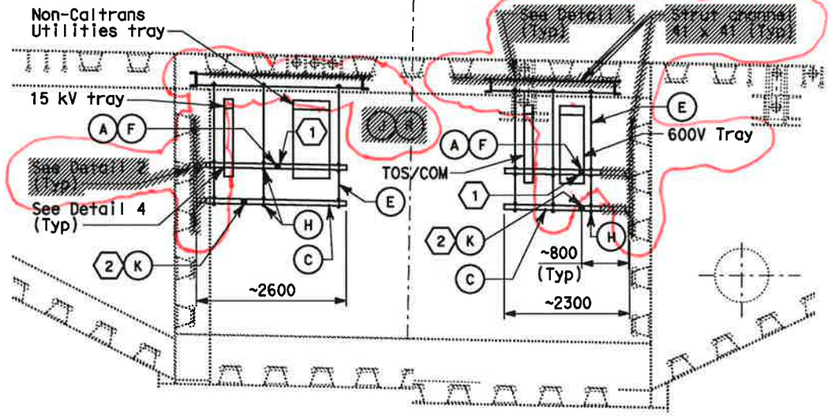

SECTION B-B
SCALE 1:50

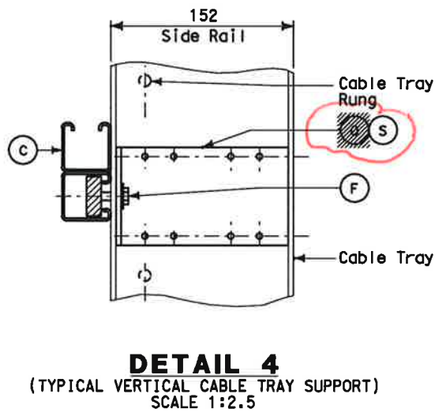

DETAIL 4
(TYPICAL VERTICAL CABLE TRAY SUPPORT)
SCALE 1:2.5

SK-RFI3204-E132B/221B

SHEET NOTES:

1. For seismic bracing, use strut channel installed diagonally to connect horizontal member of one hanger to horizontal member of adjacent hanger. See Sections A-A and B-B for connecting points.
2. For seismic bracing, use strut channel installed diagonally to connect horizontal member of tray support [illegible] to adjacent support.

NOTES:

1. Materials, hardware and fittings shall be galvanized or stainless steel. For additional requirements, see Electrical Special Provisions.
2. References:
   - For plans and sections, see sheets E-101A and E-132A.

MATERIAL LIST

Item No.	Description	Remarks
A	Strut channel, 41 mm x 41 mm	Length as required
B	Strut channel, 41 mm x 82 mm	Length as required
C	Strut channel combination, 41 mm x 82 mm	Length as required
D	Strut wall bracket	
E	Threaded steel hanger rod, 12 mm diameter	Length as required
F	Strut channel spring nut, lockwasher and hex bolt	
H	Strut channel hanger trapeze hardware kit	
J	Strut channel spring nut, tee-head bolt DELETED	
K	Strut channel brace fittings for horizontal seismic support	Length as required
M	Strut channel wing shape fitting	
R	Swivel ceiling flange DELETED	
S	Vertical tray hanger with splice plate hardware (Bolted to side rail)	

DETAILS
SAS SUPERSTRUCTURE AND SKYWAY STRUCTURE GIRDER INTERFACE WESTBOUND HINGE AW TRAY SUPPORTS
SCALE AS NOTED

E-132B

DIST	COUNTY	ROUTE	KILOMETER POST TOTAL PROJECT	SHEET No	TOTAL SHEETS
04	SF	80	13.2/13.9	186	1204

REGISTERED ELECTRICAL ENGINEER — 2/6/04 DATE

12-6-04
PLANS APPROVAL DATE

REGISTERED PROFESSIONAL ENGINEER — JENS ERLINGSSON No. 8249 Exp. 9/30/06 ELECTRICAL — STATE OF CALIFORNIA

PB POWER, Inc.
A Parsons Brinckerhoff Company
303 Second St., Suite 700N
San Francisco, CA 94107-1317

The State of California or its officers or agents shall not be responsible for the accuracy or completeness of electronic copies of this plan sheet.

Caltrans now has a web site! To get to the web site, go to http://www.dot.ca.gov

DATE	REVISED BY
12/03	EJL
1/04	CYF
2/04	EJL

CALCULATED/DESIGNED BY
CHECKED BY

DESIGN OVERSIGHT
BEHZAD GOLEMOHAMMADI

STATE OF CALIFORNIA - DEPARTMENT OF TRANSPORTATION
Caltrans

DGN FILE =>SK-RFI3204-E132B.dgn

LAST REVISION DATE PLOTTED => 18-MAR-2013

DIST	COUNTY	ROUTE	KILOMETER POST TOTAL PROJECT	SHEET No	TOTAL SHEETS
04	SF	80	13.2/13.9	187 R2	1204

Jens Erlingsson 2/6/04
REGISTERED ELECTRICAL ENGINEER DATE

12-6-04
PLANS APPROVAL DATE

REGISTERED PROFESSIONAL ENGINEER — JENS ERLINGSSON No. 8249 Exp. 9/30/06 ELECTRICAL — STATE OF CALIFORNIA

PB POWER, Inc.
A Parsons Brinckerhoff Company
303 Second St., Suite 700N
San Francisco, CA 94107-1317

The State of California or its officers or agents shall not be responsible for the accuracy or completeness of electronic copies of this plan sheet.

Caltrans now has a web site! To get to the web site, go to http://www.dot.ca.gov

Caltrans Metric

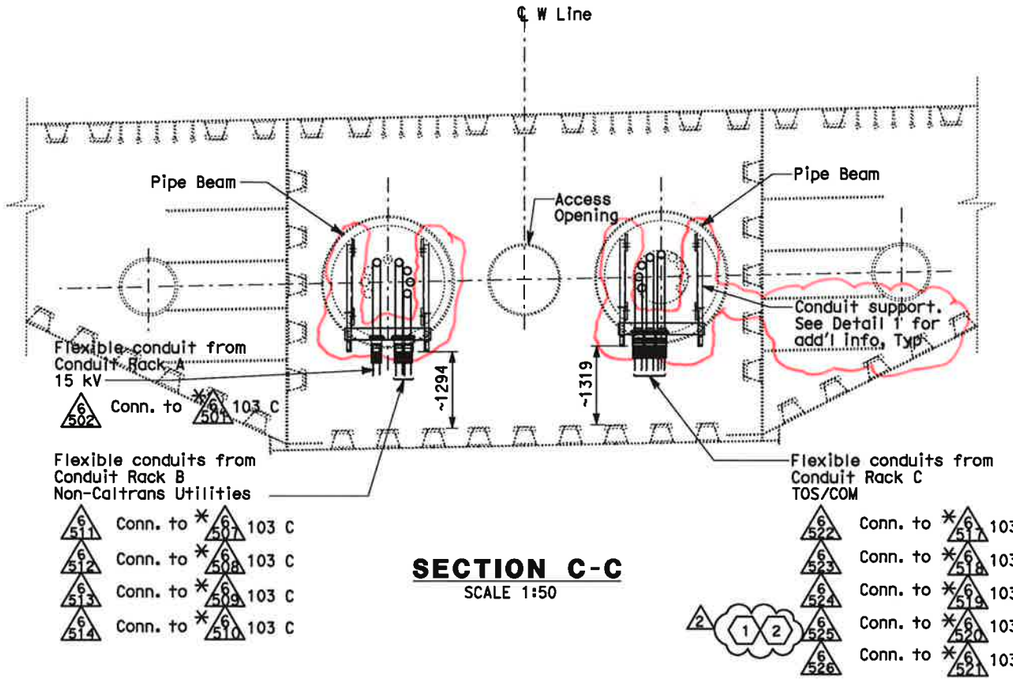

SECTION C-C
SCALE 1:50

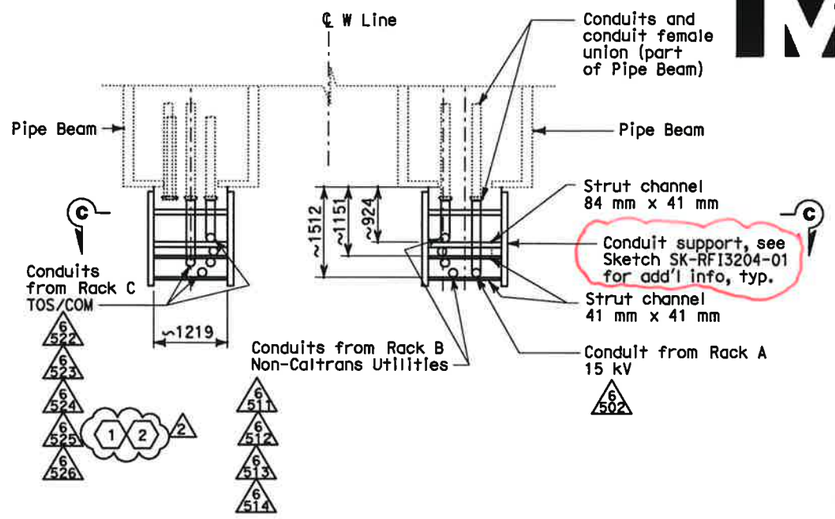

PLAN - DETAIL 1
SCALE 1:50

NOTES:

1. Materials, hardware and fittings shall be galvanized or stainless steel. For additional requirements, see Electrical Special Provisions.
2. References:
   - For Westbound plans and sections, see sheets E-101A and E-132A.
3. Existing conduits (*) inside pipe beam are supplied in Skyway contract.

SHEET NOTES:

(2) (1) Furnish and install 4-25.4 mm innerducts inside TOS/COM conduits (*6520, 6525) and 1-25.4 mm innerduct per BASE fiber optic cable in TOS/COM cable tray.

(2) Furnish and install BASE fiber optic cable in innerduct inside TOS/COM conduit and cable tray. See sheet E-1100.

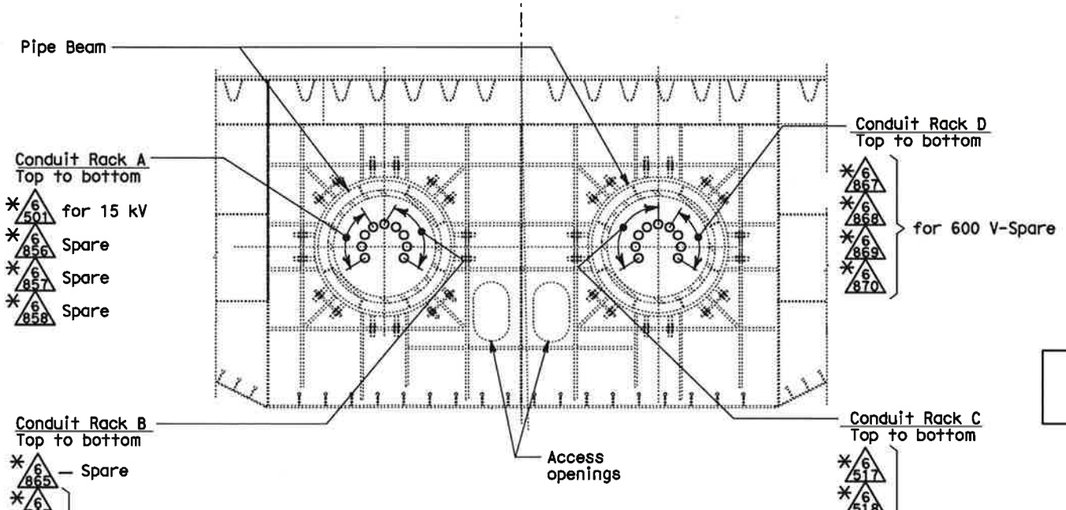

SECTION D-D
SCALE 1:50
Information of conduit arrangement only
(Conduits are part of Pipe Beams)

REGISTERED PROFESSIONAL ENGINEER — SYN YEE CHIN No. 18186 Exp. 09/30/2011 ELECTRICAL — STATE OF CALIFORNIA

Syn Yee Chin
FOR REVISION ONLY
(2)

REGISTERED PROFESSIONAL ENGINEER — S. A. ESTOQUE, JR. No. E-10151 Exp. 12/31/2008 ELECTRICAL — STATE OF CALIFORNIA

S. A. Estoque, Jr.
FOR REVISION ONLY
(1)

REQUEST FOR INFORMATION NOT ADDRESSED IN THIS CCO REMAIN IN FORCE					
(2)	03/01/11	BASE INTEGRATION	RSB	WB	150
(1)	02/25/08	CABLE TRAY CHANGES	JD	RG SE	42S1
MARK	DATE	DESCRIPTIONS REVISIONS	BY	CH'D	CCO#

CONTRACT CHANGE ORDER NO._____
SHEET_____ OF _____

SK-RFI3204-E132C / 221C

DETAILS
SAS SUPERSTRUCTURE AND SKYWAY STRUCTURE GIRDER INTERFACE WESTBOUND HINGE AW SUPPORTS
SCALE AS NOTED

E-132C

REVISED BY	DATE REVISED
EJL	2/04
EJL	1/04

CALCULATED/DESIGNED BY: CYF 12/03
CHECKED BY: EJL

DESIGN OVERSIGHT
BEHZAD GOLEMOHAMMADI

STATE OF CALIFORNIA - DEPARTMENT OF TRANSPORTATION
Caltrans

THIS PLAN ACCURATE FOR ELECTRICAL WORK ONLY.

ALL DIMENSIONS ARE IN MILLIMETERS UNLESS OTHERWISE SHOWN

FOR REDUCED PLANS ORIGINAL 0 20 40 60 80

DGN FILE =>SK-RFI3204-E132C.dgn

LAST REVISION DATE PLOTTED => 18-MAR-2013

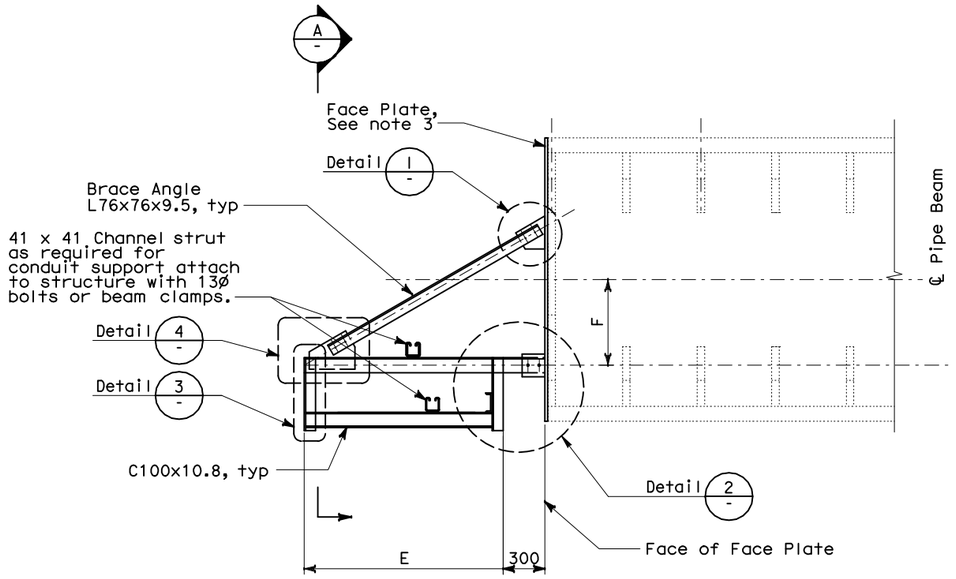

CONDUIT SUPPORT AT PIPE BEAM

SEE TABLE FOR DIMENSIONS
SCALE: NO SCALE

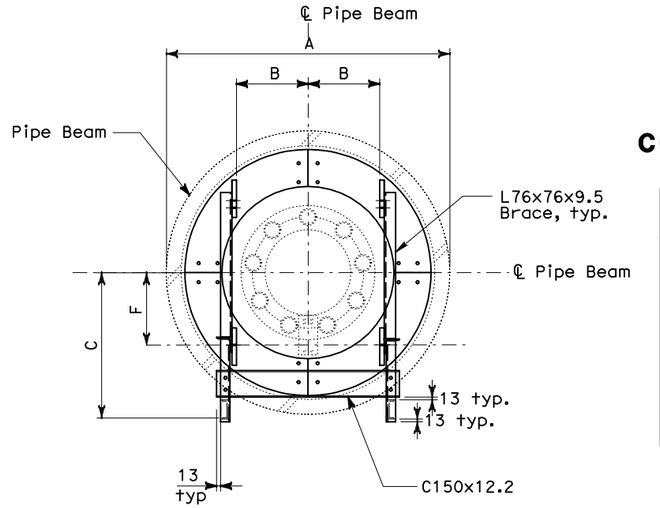

SECTION A-A

NO SCALE

TABLE CONDUIT SUPPORT DIMENSIONS

	Hinge A
A	1900
B	600
C	991
D	420
E	1335
F	574

NOTES:

1. For General Structural Notes, see AS-1.
2. For other details not shown, see electrical plans.
3. See Sketch SK-RFI3204-2 for face plate.

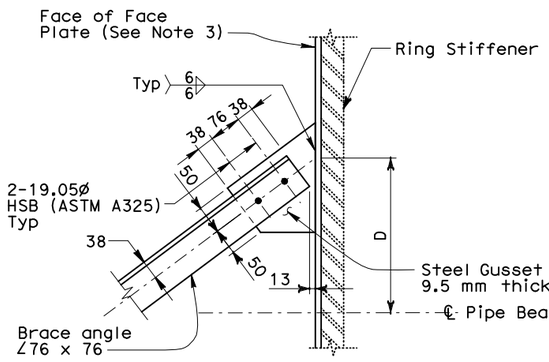

1 DETAIL

SEE TABLE FOR DIMENSIONS
NO SCALE

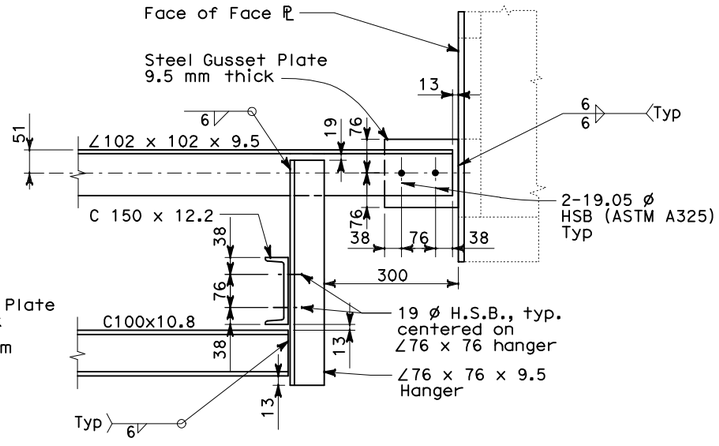

2 DETAIL

NO SCALE

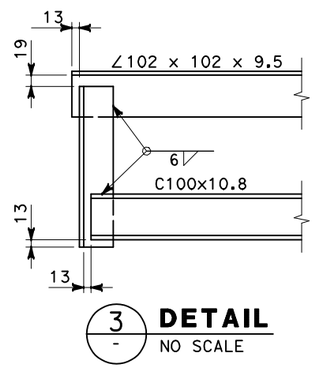

3 DETAIL

NO SCALE

(Brace not shown for clarity)

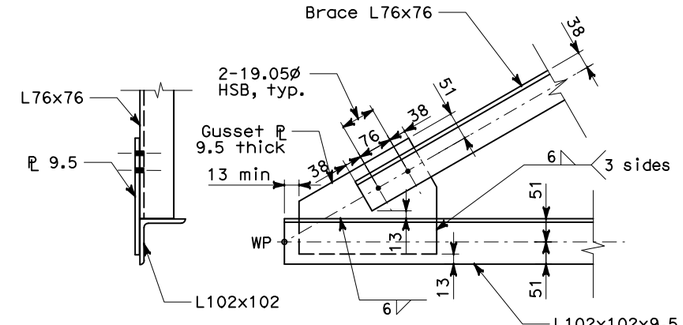

4 DETAIL

NO SCALE

(Hanger L76x76 not shown for clarity)

SK-RFI3204-01

ALL DIMENSIONS ARE IN MILLIMETERS UNLESS OTHERWISE SHOWN

DIST	COUNTY	ROUTE	KILOMETER POST TOTAL PROJECT	SHEET No	TOTAL SHEETS
04	SF	80	13.2/13.9		1204

REGISTERED CIVIL ENGINEER

PLANS APPROVAL DATE

REGISTERED PROFESSIONAL ENGINEER No. STATE OF CALIFORNIA

The State of California or its officers or agents shall not be responsible for the accuracy or completeness of electronic copies of this plan sheet.

Parsons Brinckerhoff Quade & Douglas, Inc.
303 Second Street, Suite 700N
San Francisco, CA 94107

Caltrans now has a web site! To get to the web site, go to: http://www.dot.ca.gov

Bob Zandipour
DESIGN OVERSIGHT

SIGN OFF DATE

	BY	CHECKED
DESIGN		
DETAILS		
QUANTITIES		

PREPARED FOR THE STATE OF CALIFORNIA DEPARTMENT OF TRANSPORTATION

Brady Nadell
PROJECT ENGINEER

BRIDGE NO. 34-0006
KILOMETER POST 13.2/13.9

CU 04251
EA 0120F1

DISREGARD PRINTS BEARING EARLIER REVISION DATES →

REVISION DATES (PRELIMINARY STAGE ONLY)

SHEET OF

DESIGN DETAIL SHEET (METRIC) (REV. 3/1/98)

ORIGINAL SCALE IN MILLIMETERS FOR REDUCED PLANS 0 10 20 30 40 50 60 70 80 90 100

FILE => SK-RFI3204-01.dgn

T:\13103\WS\pse\SAS Struc\RFI\SAS RFI 3204\SK-RFI3204-01.dgn

USERNAME => Llorico DATE PLOTTED => 18-MAR-2013 TIME PLOTTED => 15:49

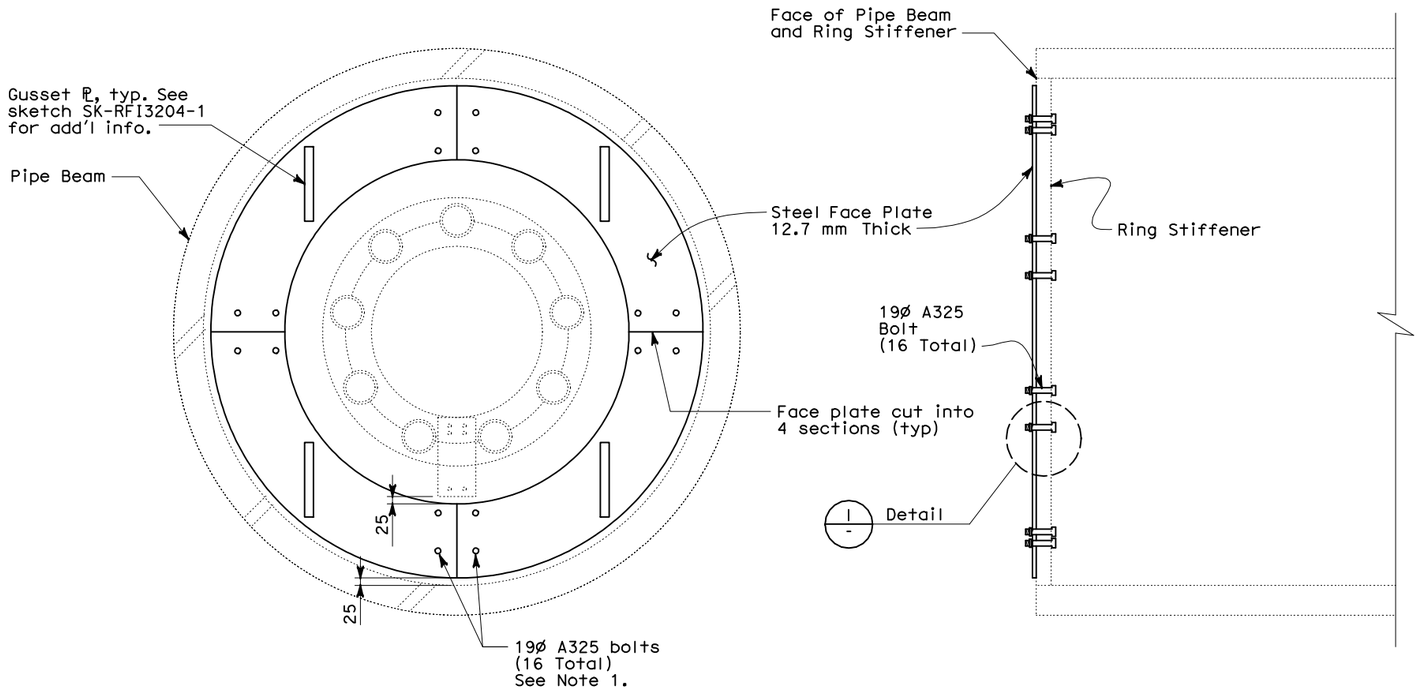

FACE PLATE AT PIPE BEAM

NO SCALE

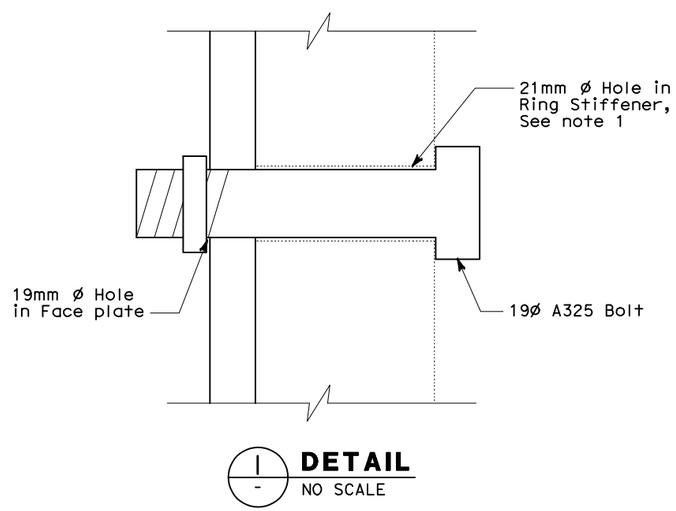

1/- DETAIL

NO SCALE

NOTES:

1. Bolt locations in face plate shall match existing bolt pattern in ring stiffener as shown. Verify existing bolt holes sizes in field.
2. Bolts shall be installed with lock washer.
3. All structural steel shall be hot-dipped galvanized.

DIST	COUNTY	ROUTE	KILOMETER POST TOTAL PROJECT	SHEET No	TOTAL SHEETS
04	SF	80	13.2/13.9		1204

REGISTERED CIVIL ENGINEER

PLANS APPROVAL DATE

REGISTERED PROFESSIONAL ENGINEER No. STATE OF CALIFORNIA

The State of California or its officers or agents shall not be responsible for the accuracy or completeness of electronic copies of this plan sheet.

Parsons Brinckerhoff Quade & Douglas, Inc.
303 Second Street, Suite 700N
San Francisco, CA 94107

Caltrans now has a web site! To get to the web site, go to: http://www.dot.ca.gov

SK-RFI3204-02

ALL DIMENSIONS ARE IN MILLIMETERS UNLESS OTHERWISE SHOWN

Bob Zandipour
DESIGN OVERSIGHT

SIGN OFF DATE

	BY	CHECKED
DESIGN		
DETAILS		
QUANTITIES		

PREPARED FOR THE STATE OF CALIFORNIA DEPARTMENT OF TRANSPORTATION

Brady Nadell
PROJECT ENGINEER

BRIDGE NO. 34-0006
KILOMETER POST 13.2/13.9

DESIGN DETAIL SHEET (METRIC) (REV. 3/1/98)

ORIGINAL SCALE IN MILLIMETERS FOR REDUCED PLANS 0 10 20 30 40 50 60 70 80 90 100

CU 04251
EA 0120F1

DISREGARD PRINTS BEARING EARLIER REVISION DATES →

REVISION DATES (PRELIMINARY STAGE ONLY)

SHEET OF

FILE => SK-RFI3204-02.dgn

T:\13103\MS\pse\SAS Struc\RFI\SAS RFI 3204\SK-RFI3204-02.dgn

USERNAME => Llorico DATE PLOTTED => 18-MAR-2013 TIME PLOTTED => 15:49

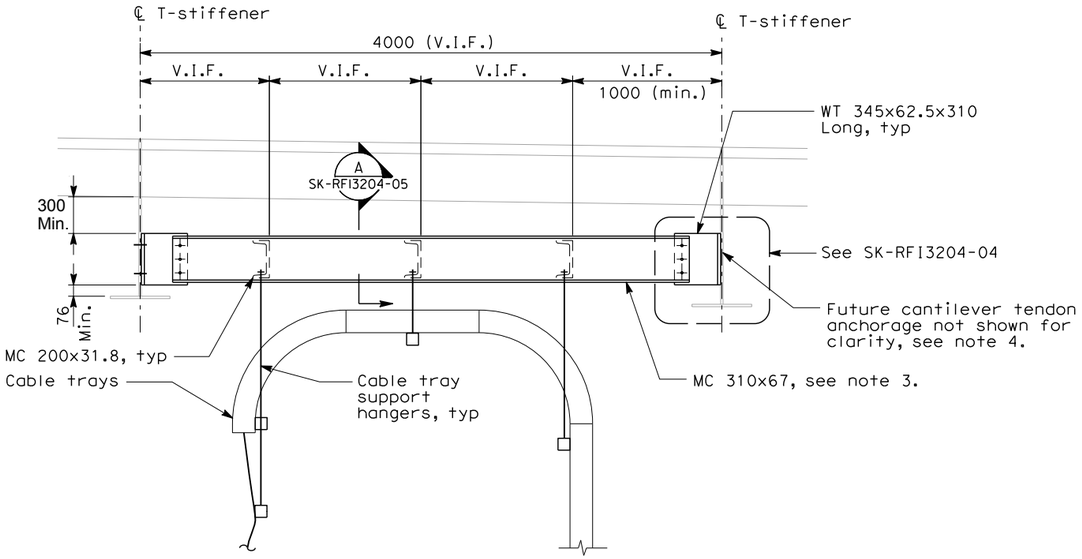

CONDUIT TRAY/CONDUIT SUPPORT AT CEILING

NO SCALE

Caltrans Metric

DIST	COUNTY	ROUTE	KILOMETER POST TOTAL PROJECT	SHEET No	TOTAL SHEETS
04	SF	80	13.2/13.9		1204

REGISTERED CIVIL ENGINEER

PLANS APPROVAL DATE

REGISTERED PROFESSIONAL ENGINEER No. STATE OF CALIFORNIA

The State of California or its officers or agents shall not be responsible for the accuracy or completeness of electronic copies of this plan sheet.

Parsons Brinckerhoff Quade & Douglas, Inc.
303 Second Street, Suite 700N
San Francisco, CA 94107

Caltrans now has a web site! To get to the web site, go to: http://www.dot.ca.gov

NOTES:

1. For General Structural Notes, see AS-1.
2. For other details not shown, see electrical plans.
3. MC channel shall be installed in true horizontal position.
4. Contractor shall maintain 305 min. clr. in all directions around future tendon anchorage zone.

SK-RFI3204-03

ALL DIMENSIONS ARE IN
MILLIMETERS UNLESS OTHERWISE SHOWN

Bob Zandipour
DESIGN OVERSIGHT

SIGN OFF DATE

	BY	CHECKED
DESIGN		
DETAILS		
QUANTITIES		

PREPARED FOR THE STATE OF CALIFORNIA DEPARTMENT OF TRANSPORTATION

Brady Nadell
PROJECT ENGINEER

BRIDGE NO.	
34-0006	
KILOMETER POST	
13.2/13.9	

DESIGN DETAIL SHEET (METRIC) (REV. 3/1/98)

ORIGINAL SCALE IN MILLIMETERS FOR REDUCED PLANS 0 10 20 30 40 50 60 70 80 90 100

CU 04251
EA 0120F1

DISREGARD PRINTS BEARING EARLIER REVISION DATES →

REVISION DATES (PRELIMINARY STAGE ONLY)

SHEET OF

FILE => SK-RFI3204-03.dgn

$FREQUEST

USERNAME => MelsheimeDATE PLOTTED => 3/18/2013 TIME PLOTTED => 5:17:12 PM

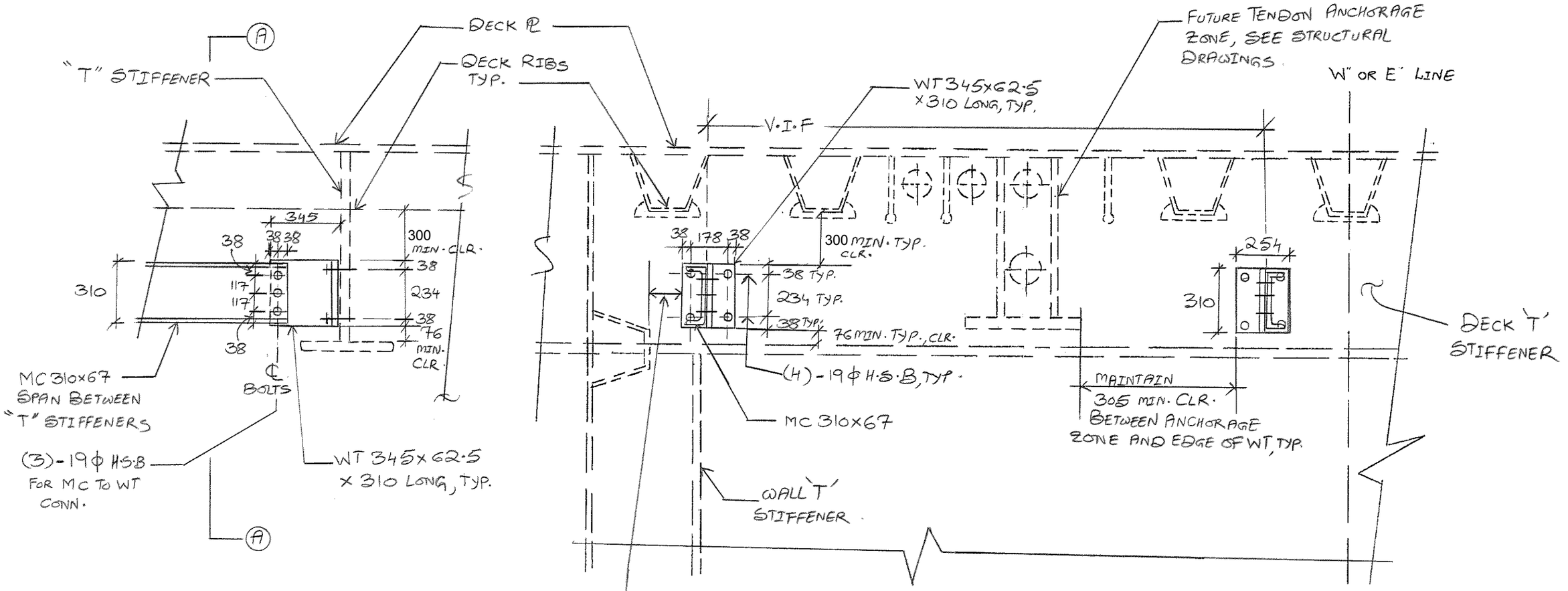

DETAIL
NTS

SECTION A-A
NTS

SK-RFI3204-04

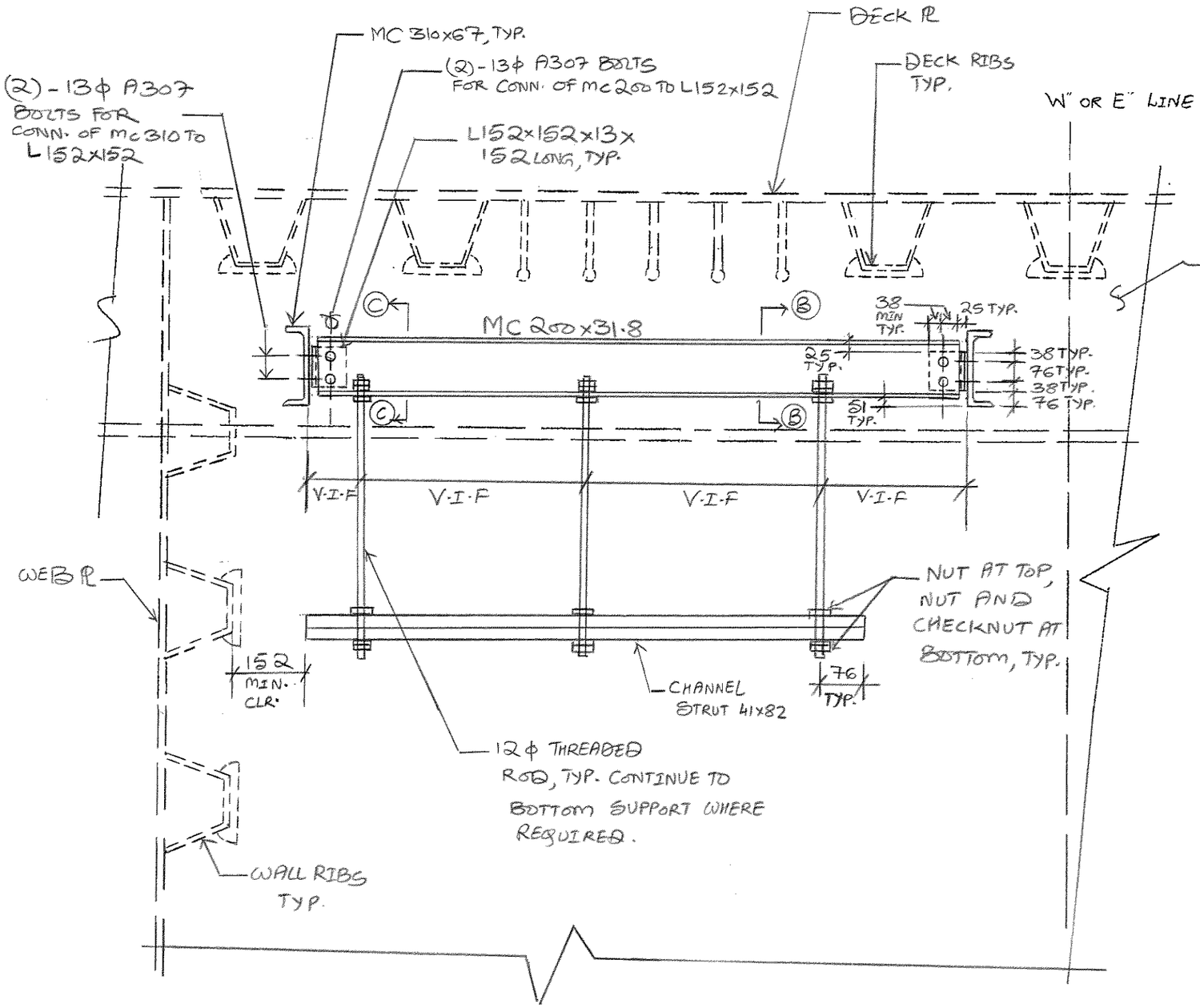

SECTION A-A
NTS.

SK-RFI3204-05

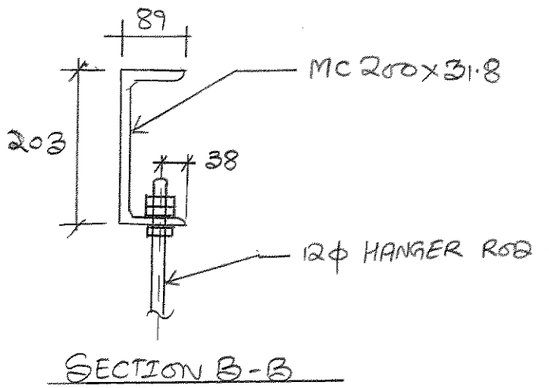

SECTION B-B
NTS

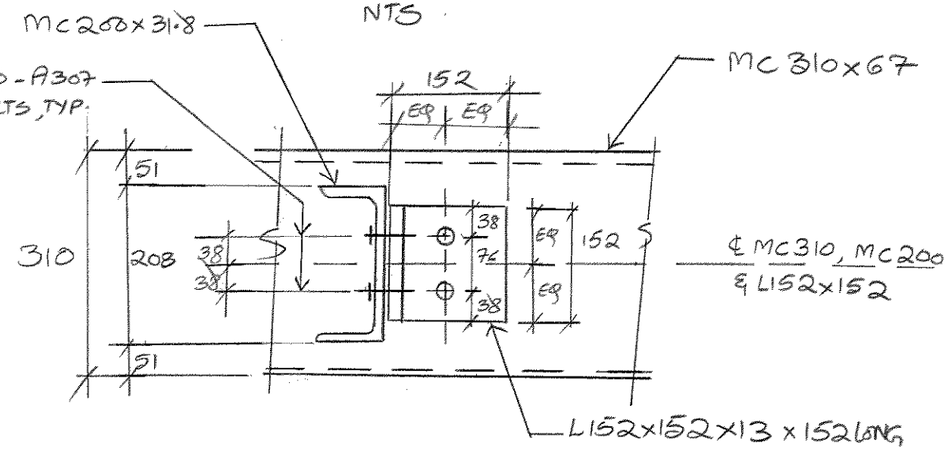

SECTION C-C
NTS

NOTES:

1) SEE ELECTRICAL PLANS FOR ADDL INFO.
2) CABLE TRAYS/CONDUITS NOT SHOWN FOR CLARITY
3) SEISMIC HORIZONTAL BRACING NOT SHOWN FOR CLARITY. SEE ELECTRICAL PLANS
4) VERIFY ALL DIMENSIONS IN FIELD.