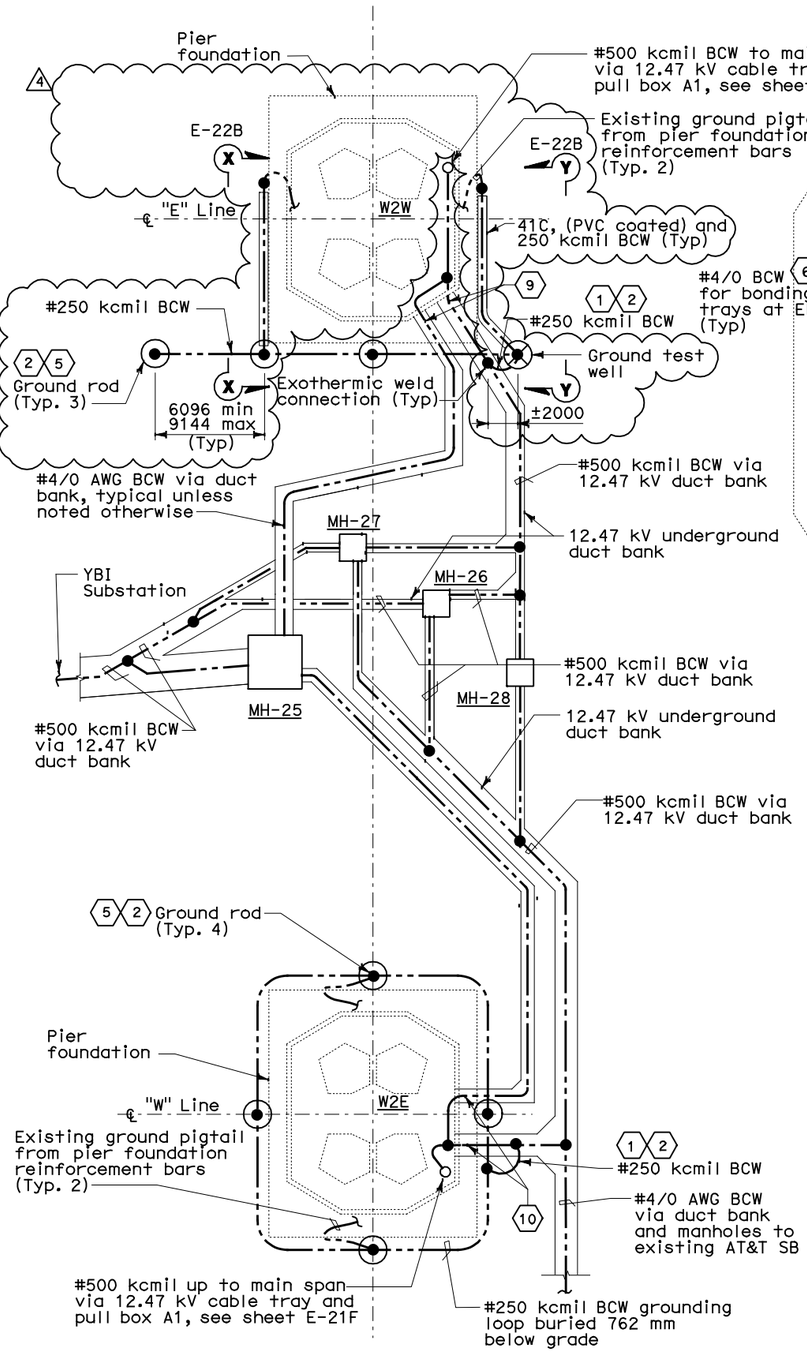

PIER W2 FOUNDATION PLAN (11)

DETAIL 1

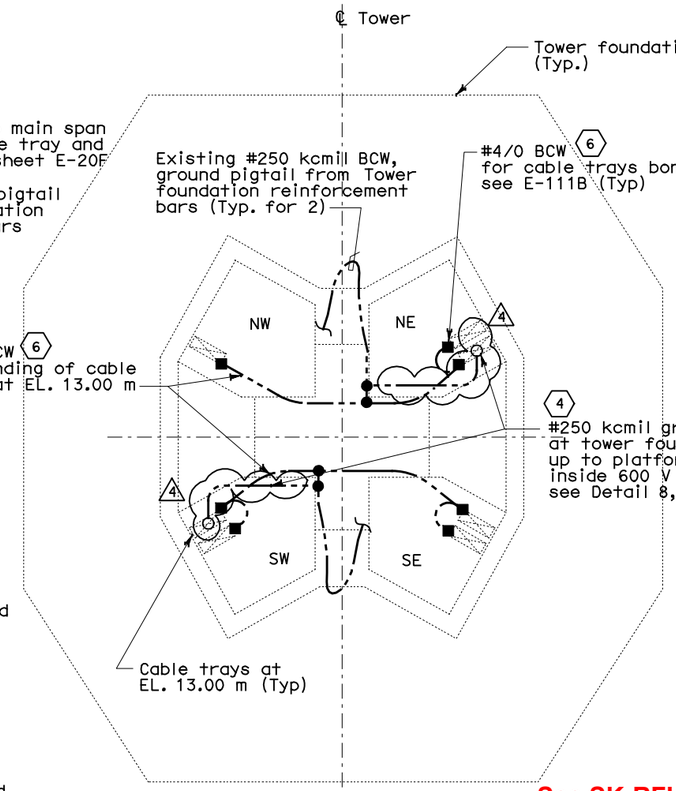

TOWER FOUNDATION PLAN

DETAIL 2

See SK-RFI1462R01-E-22A for additional details

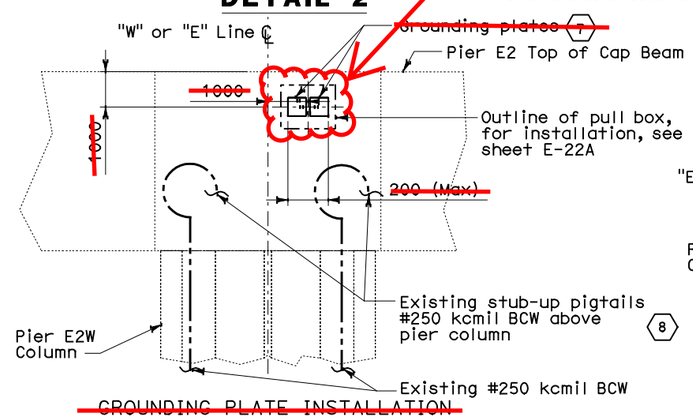

~~GROUNDING PLATE INSTALLATION~~

SECTION A-A

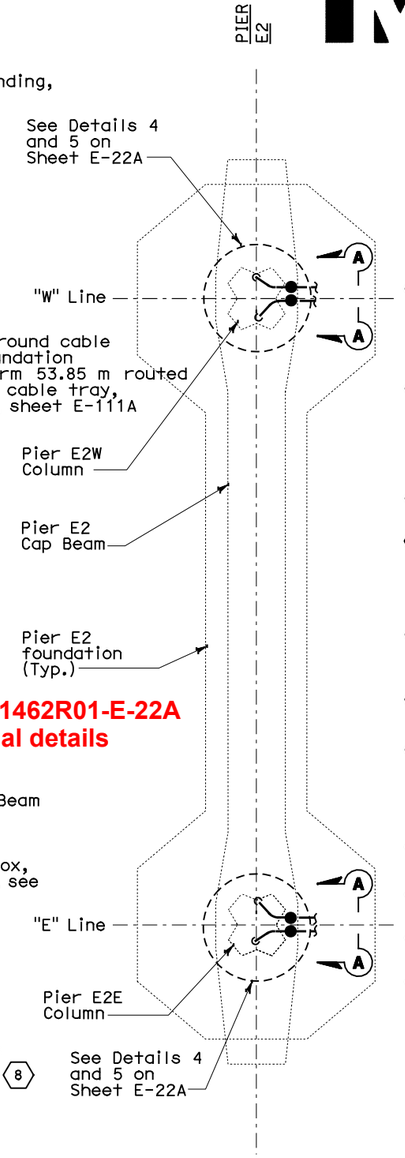

PIER E2 FOUNDATION PLAN

DETAIL 3

SHEET NOTES:

(1) Tie the underground duct bank #500 kcmil Bare Copper Wire (BCW) system grounding conductor to the W2E and W2W pier foundations. See W2 contract 04-0120C4 for limited scope of work.

(2) Route the #250 kcmil grounding conductors around the W2W and connect to the new grounding rods. This grounding loop shall be exothermically connected to the #500 kcmil main ground conductor at the pier. This is typical for pier W2E.

(3) Not used.

(4) Main tower foundation ground conductors shall be routed vertically up to platform 53.85 m via 600V cable trays inside SW and NE tower quadrants and tied exothermically to the #500 kcmil main ground conductor.

(5) Ground rod shall be copper clad, 19 mm diameter and 3048 mm long.

(6) Bond all the cable trays to the ground loop at Tower elevation 13 m.

(7) Install two grounding plates, Thermoweld Type CR-27 Cat. #38-4533-6B or equal (sized for #250 kcmil BCW with 305mm pigtail). Grounding plates shall be embedded at east face side of the pier E2 cap beam.

(8) For connection of stub-up #250 kcmil BCW to grounding plates, see sheet E-22A.

(9) See Detail 1, sheet E-22B for grounding installation through pier pit wall.

(10) See Detail 2, sheet E-22B for grounding installation through pier pit wall.

(11) Pier grounding system must be verified and tested for ground resistance prior to tie-in to #500 kcmil main ground conductor. Perform tests, by the fall-of-potential method according to IEEE-81. Contractor shall submit a test plan and procedure for Engineer's approval. Test results shall be submitted to the Engineer for evaluation and approval.

MARK	DATE	DESCRIPTIONS	BY	CH'D	CCO#
4	04/27/12	ELECTRICAL GROUNDING	RSB	RG	75
3	12/12/11	W2 DUCT BANKS REINFORCEMENT	TW	RG	205
2	08/08/11	W2 DUCT BANKS REINFORCEMENT	TW	RG	205
1	11/20/09	ELECTRICAL GROUNDING	RR AWG	RG FE	75

REQUEST FOR INFORMATION NOT ADDRESSED IN THIS CCO REMAIN IN FORCE

REVISIONS

CONTRACT CHANGE ORDER NO._____
SHEET _____ OF _____

REGISTERED PROFESSIONAL ENGINEER — FADI WALIEDDINE No. 11465 Exp. 12/31/2009 ELECTRICAL — STATE OF CALIFORNIA

REGISTERED PROFESSIONAL ENGINEER — DAVID H. OTO No. 10699 Exp. 06/30/2013 ELECTRICAL — STATE OF CALIFORNIA

FOR REVISION ONLY (1) FOR REVISION ONLY (2) (3) (4)

ORIGINAL SHEET SUPERCEDED

SK-RFI1462R01-E-22

DETAILS
UNDERGROUND FOUNDATION GROUNDING
NO SCALE

E-22

DESIGN OVERSIGHT: BEHZAD GOLEMOHAMMADI

CALCULATED/DESIGNED BY: KG — CHECKED BY: PF — DATE 11/01 — DATE 12/01 — REVISED BY — DATE REVISED

STATE OF CALIFORNIA - DEPARTMENT OF TRANSPORTATION — Caltrans

THIS PLAN ACCURATE FOR ELECTRICAL WORK ONLY.

ALL DIMENSIONS ARE IN MILLIMETERS UNLESS OTHERWISE SHOWN

FOR REDUCED PLANS ORIGINAL SCALE IS IN MILLIMETERS 0 20 40 60 80

DGN FILE =>04-0120f1_0105R04.dgn
USERNAME =>llorico

CU 04251 — EA 0120F1

LAST REVISION 00-00-00 — DATE PLOTTED => 25-APR-2012 — TIME PLOTTED => 16:58

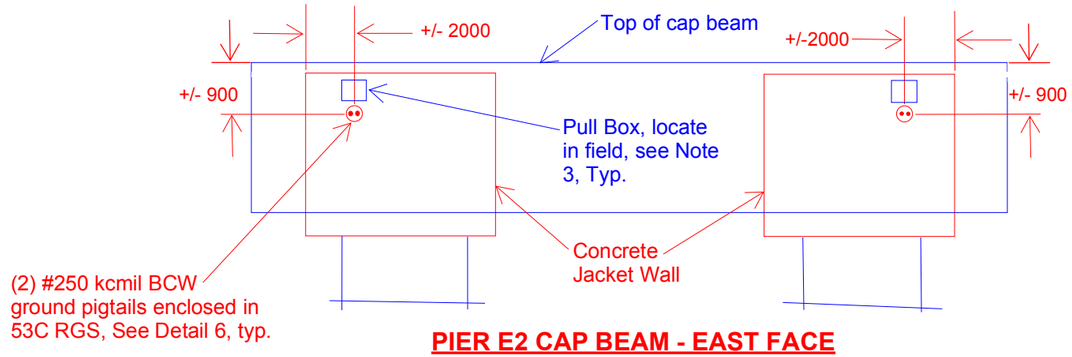

PIER E2 CAP BEAM - EAST FACE
(NTS)

REQUEST FOR INFORMATION NOT ADDRESSED IN THIS CCO REMAIN IN FORCE					
0	11/20/09	ELECTRICAL GROUNDING	RR AWG	RG FW	75
MARK	DATE	DESCRIPTIONS	BY	CH'D	CCO#
REVISIONS					

CONTRACT CHANGE ORDER NO._____
SHEET_____ OF _____

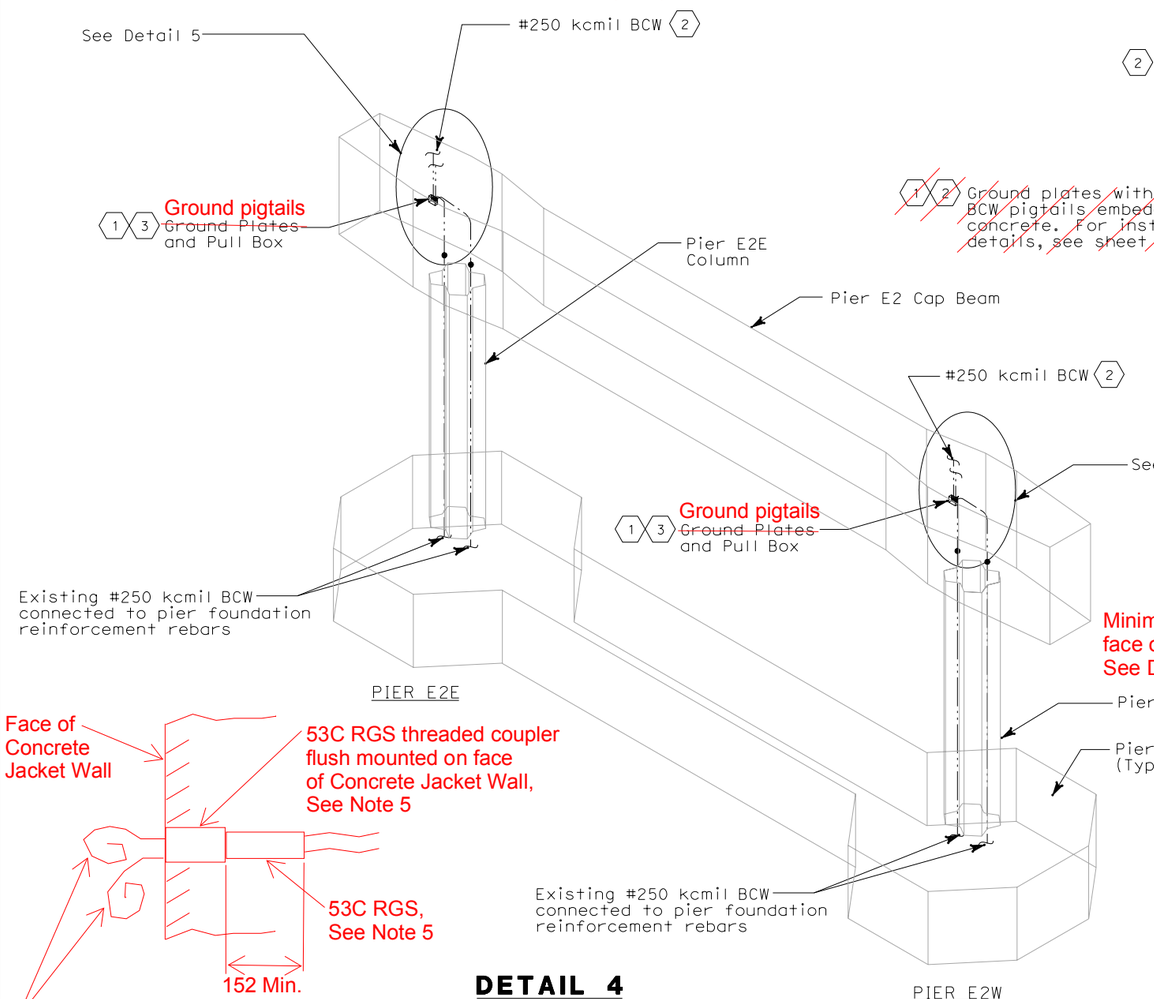

DETAIL 4
Concrete Jacket Wall around Cap Beam not shown for clarity

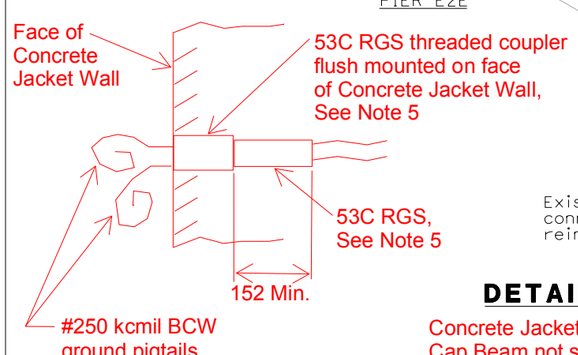

DETAIL 6
NTS

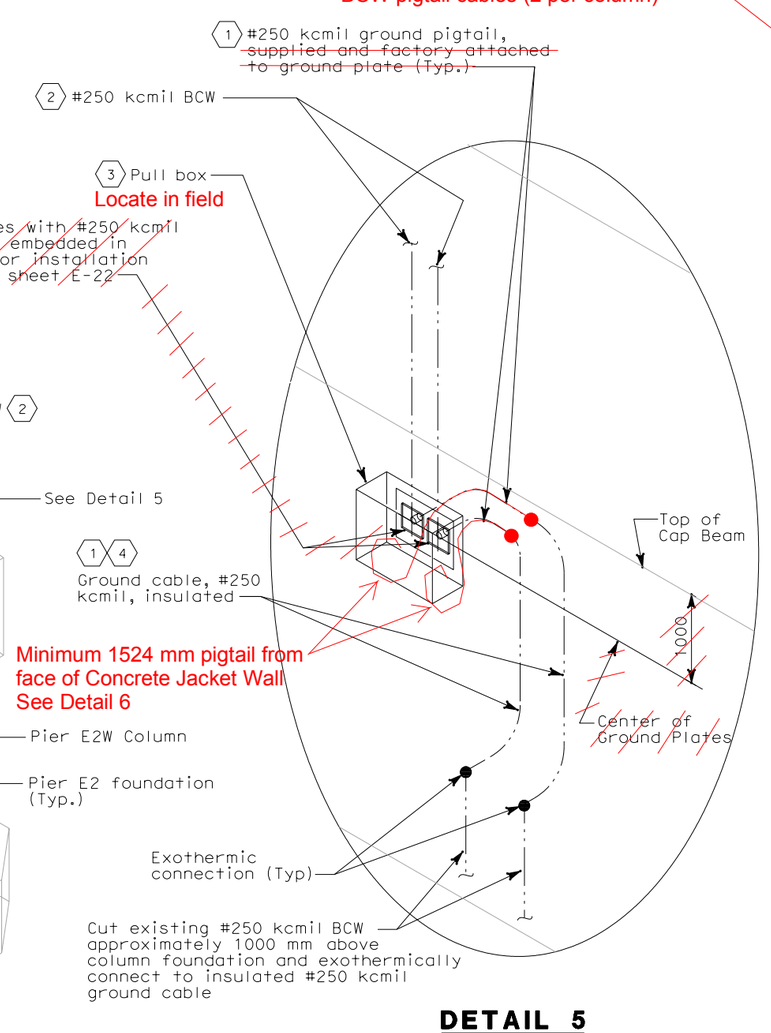

DETAIL 5
Concrete Jacket Wall around Cap Beam not shown for clarity.

avoiding any interference with E2 Shear Key Saddle assembly or PT ducts.

NOTES:

(1) ~~Install and exothermically connect #250 kcmil insulated ground cable (2 per column) to the embedded ground plate pigtail located on the east face of cap beam and connect the other end~~ to the existing #250 kcmil BCW that are stub-up above the pier column. Route the ~~insulated~~ ground cable within the cap beam. ~~Use green trace tape if green insulation not available.~~ Secure cable to inside of vertical rebar cage. Contractor to verify ~~insulated~~ ground cable length to suit field condition.

(2) ~~Connect each #250 kcmil BCW to ground plates using heavy duty NEMA Type 2 hole copper compression terminal lugs bolted to the plates. Exothermic connection without the lug is also acceptable in lieu of bolt connection.~~ Enclose the #250 kcmil BCW in liquidtight flexible metal conduit when routing up to OBG for connection to #500 kcmil main ground conductor. Typical for Westbound and Eastbound, see sheets E-111 and E-196 respectively.

(3) Pull box shall be 305 x ~~244~~ 305 x 154 stainless steel NEMA 4X enclosure ~~with cutout in back to protect grounding plates and connections.~~ Box shall be mounted to face of ~~Cap Beam with expansion bolts.~~ Place Neoprene gasket between box and concrete face to inhibit moisture encrosion.

(4) Seal exposed bare copper wire (BCW) and exothermic connections with heavy duty splicing tape and vinyl electrical tape.

Concrete Jacket Wall per response to RFI 3351R00

Hoffman #A-1212CHNFSS6 or equal.

(5) Conduit and Threaded coupler shall be located to avoid any interference with PT ducts, Jacket Wall reinforcement or other embedded structural elements.

SK-RFI1462R01-E22AR1
R. GARCIA

DETAILS
UNDERGROUND FOUNDATION GROUNDING
NO SCALE

E-22A

STATE OF CALIFORNIA - DEPARTMENT OF TRANSPORTATION
Caltrans
DESIGN OVERSIGHT
BEHZAD GOLEMOHAMMADI
CALCULATED/DESIGNED BY AWG DATE 8/08 REVISED BY
CHECKED BY RG 8/08 DATE REVISED

LAST REVISION 00-00-00
DATE PLOTTED => 11/20/2009
TIME PLOTTED => 9:41:34 AM

FOR REDUCED PLANS ORIGINAL SCALE IS IN MILLIMETERS 0 20 40 60 80
DGN FILE =>t:\13103\MS\pse\SAS Struc\CCO\SAS CC075\2009-11-20 CCO 75 Submittal\04-0120f1_0105S01.dgn
USERNAME =>garciar
CU 04251 EA 0120F1