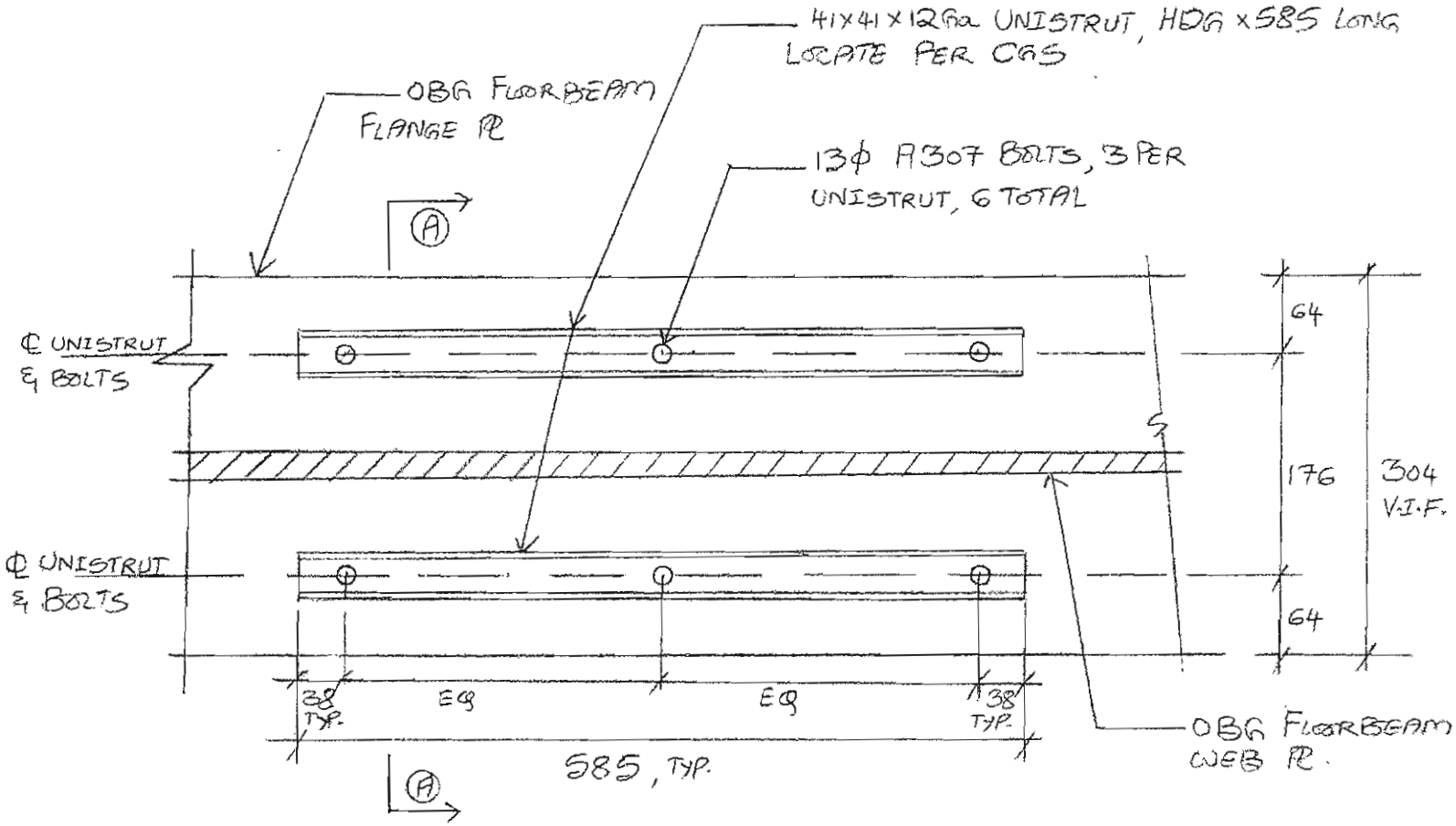

STRONG MOTION SENSOR ENCLOSURE MOUNTING INSIDE OBG @ PP 127.5

SSE 44, 45, 46, 47

NTS

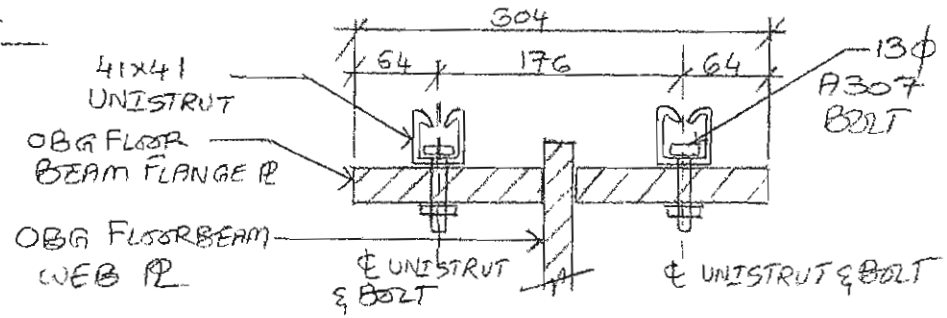

SECTION A-A

NTS

SK3154R00-01

SHEET 1

SSE 45 AND 46

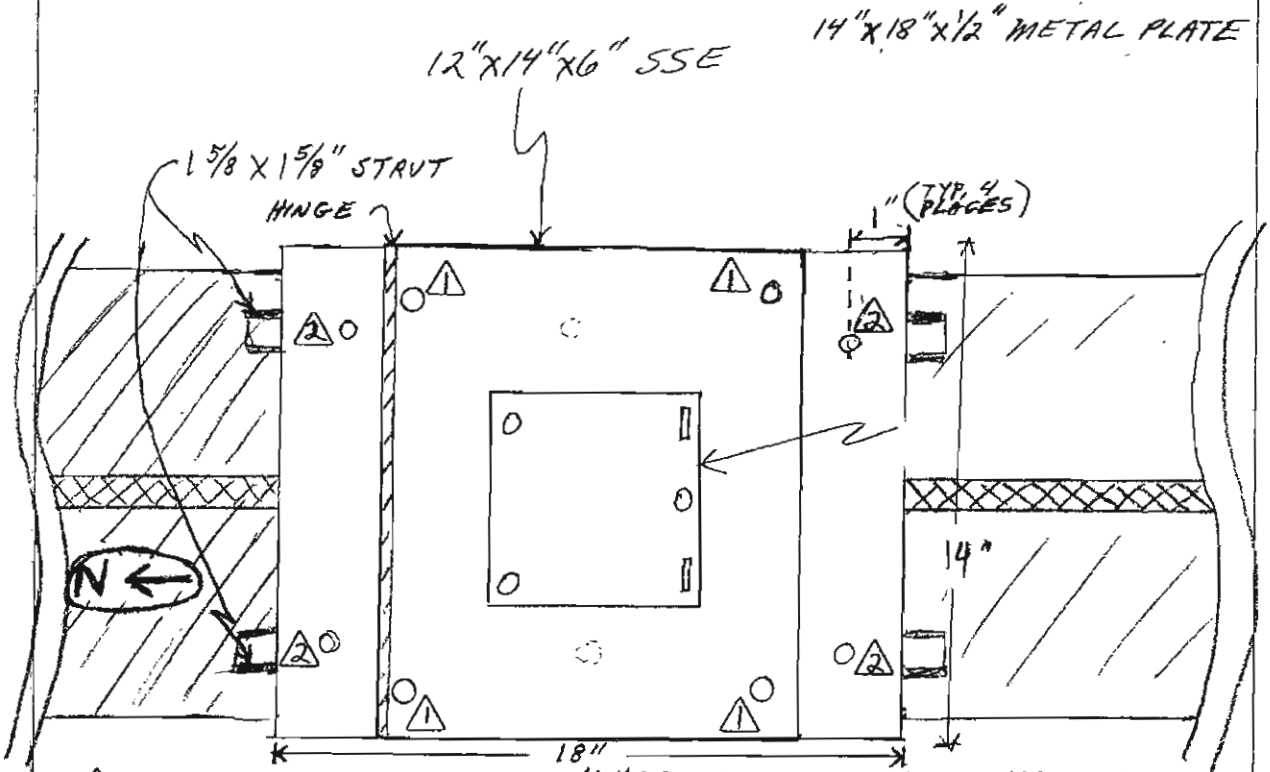

1. DRILL AND TAP STEEL PLATE 1/4"-20. BOLT SSE TO PLATE USING STAINLESS STEEL 1/4"-20x1" BOLTS
2. DRILL 7/16" HOLE IN STEEL PLATE, BOLT THRU STEEL PLATE TO STRUT USING 3/8"x1 1/2" BOLTS.
3. DRILL AND TAP STEEL PLATE 1/4-20. BOLT SENSOR MOUNTING PLATE THRU SSE TO STEEL PLATE USING STAINLESS STEEL 1/4-20x1" BOLTS
4. PLATE TO BE HOT-DIPPED GALVANIZED.

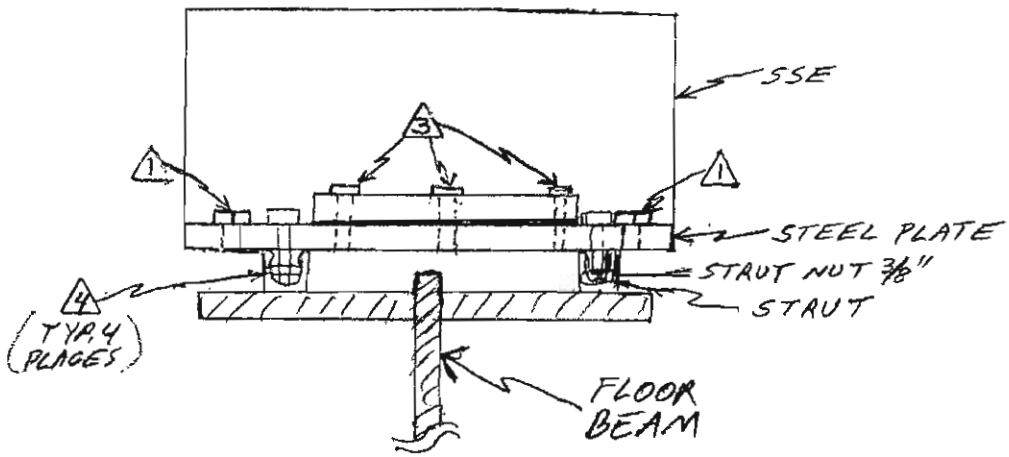

DRAWING NOT TO SCALE

SK3154R00-2

SHEET 2

SSE 44 AND 47

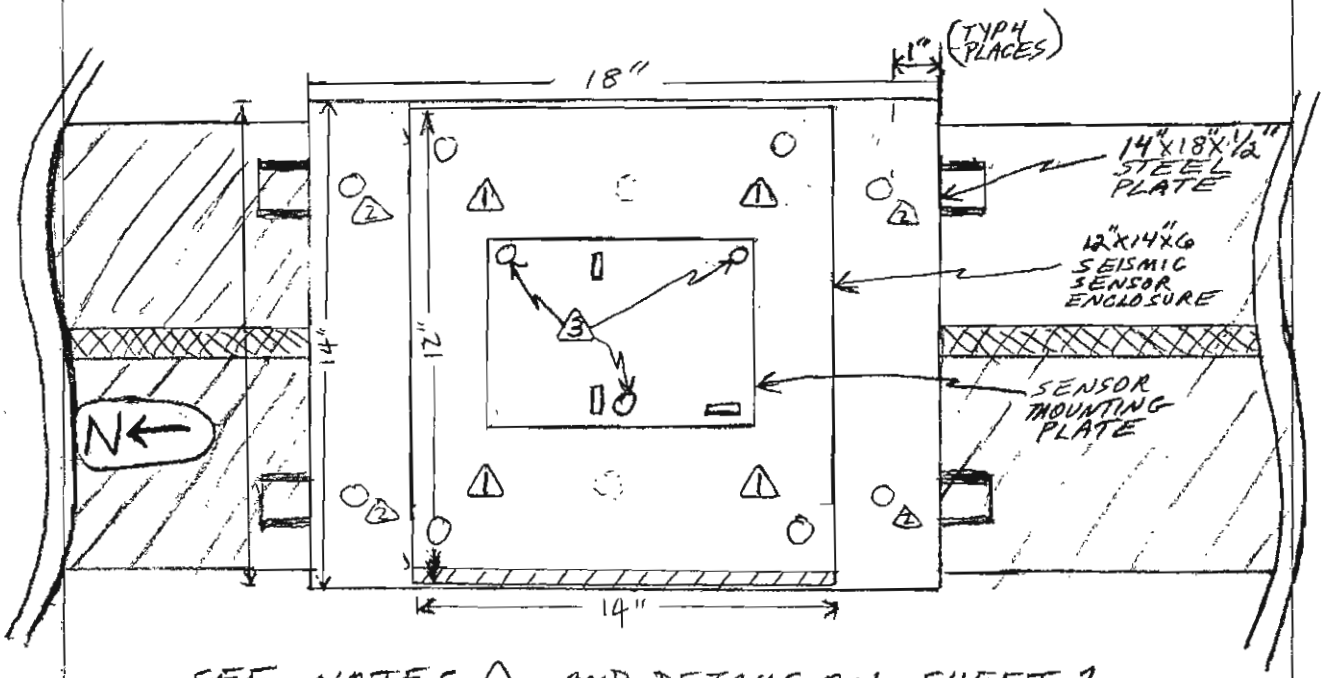

SEE NOTES △ AND DETAILS ON SHEET 1 FOR SSE's 45 AND 46

DRAWING NOT TO SCALE

SK3154R00-3