REQUEST FOR INFORMATION NOT ADDRESSED IN THIS CCO REMAIN IN FORCE					
5	10/23/13	ADDITIONAL SAS MISCELLANEOUS ELECTRICAL CHANGES	RR	RG	191S2
4	02/08/13	ADDITIONAL SAS/SKYWAY MISCELLANEOUS ELECTRICAL CHANGES	RR	RG	191S1
3	12/21/11	ELECTRICAL CHANGES FOR ELEVATION 53 IMPROVEMENTS	TW EC	RG RM	190
2	12/11/09	TOWER UTILITY PANELS	JS TW	RG FW	70
1	02/19/08	ELECTRICAL MODIFICATIONS	MP EL	RR	42
MARK	DATE	DESCRIPTIONS	BY	CH'D	CCO#
		REVISIONS			

CONTRACT CHANGE ORDER NO._____
SHEET _____ OF _____

REGISTERED PROFESSIONAL ENGINEER MARRELL FUMIO TAKAKI No. E 8651 Exp. 9/30/2008 ELECTRICAL STATE OF CALIFORNIA

FOR REVISION ONLY 1

REGISTERED PROFESSIONAL ENGINEER FADI WALIEDDINE No. 11465 Exp. 12/31/2009 ELECTRICAL STATE OF CALIFORNIA

FOR REVISION ONLY 2

Caltrans Metric

DIST	COUNTY	ROUTE	KILOMETER POST TOTAL PROJECT	SHEET No	TOTAL SHEETS
04	SF	80	13.2/13.9	288 R5	1204

12/19/02
REGISTERED ELECTRICAL ENGINEER DATE

12-6-04
PLANS APPROVAL DATE

REGISTERED PROFESSIONAL ENGINEER JENS ERLINGSSON No. 8249 Exp. 9/30/06 ELECTRICAL STATE OF CALIFORNIA

PB POWER, Inc.
A Parsons Brinckerhoff Company
303 Second St., Suite 700N
San Francisco, CA 94107-1317

The State of California or its officers or agents shall not be responsible for the accuracy or completeness of electronic copies of this plan sheet.

Caltrans now has a web site! To get to the web site, go to http://www.dot.ca.gov

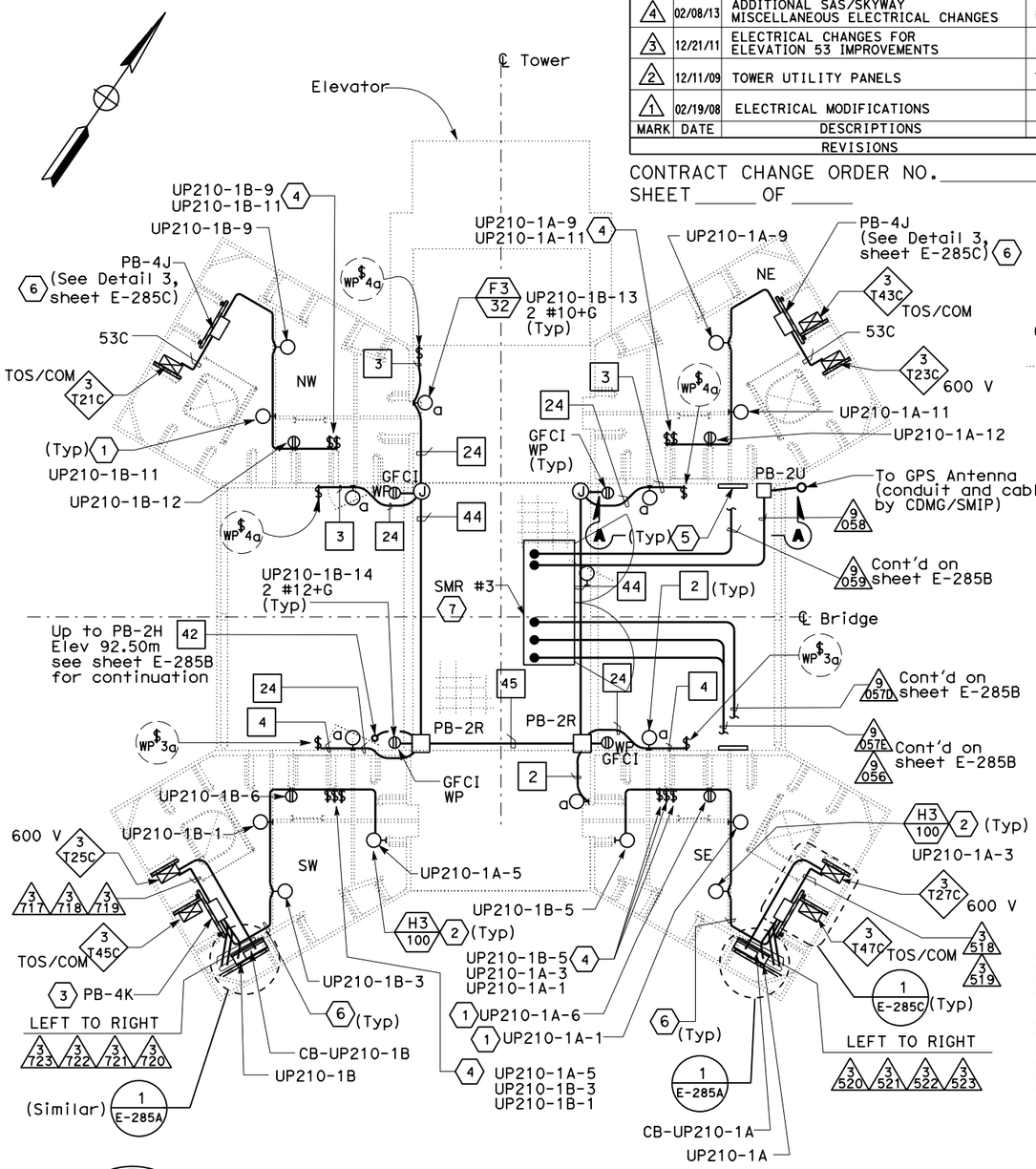

PLAN AT ELEVATION 89.85 m

SCALE: 1:40

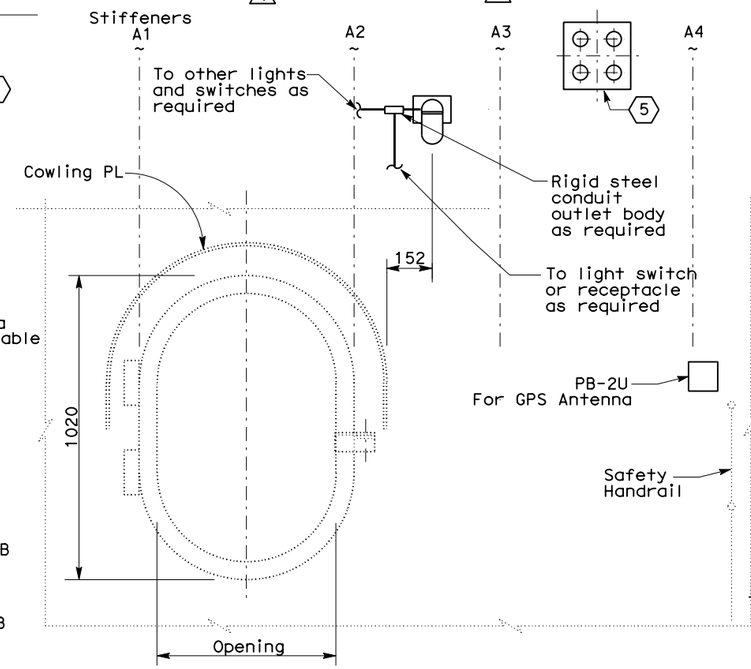

SECTION A-A
ACCESS OPENING DOOR

NO SCALE

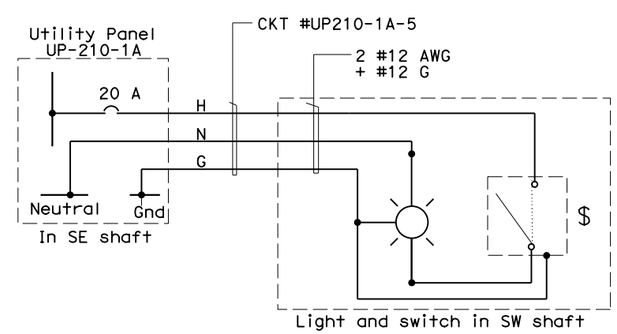

120 V ELECTRICAL EQUIPMENT TASK LIGHTING WIRING DIAGRAM

(Shown for circuit #UP210-1A-5 only, light in SE shaft is similar, but fed from UP-210-1B-5 in the SW shaft)

SHEET NOTES:

1. For tower shaft ladder and platform lighting and power layout, see section B-B on sheet E-284 & E-284A.
2. Light shown mounted under ceiling.
3. For shaft lighting and receptacle distribution box details, see Detail 1, Sheet E-285C.
4. Multiple switches at certain elevations. See sheets E-284 and E-284A and Detail 8 sheet E-268
5. See sheet E-285B for penetration doubler plate schedule and E-264L for details.
6. Numbers and sizes of conduits are field route to lights, receptacles and switches. See sheets E-284 and E-284A for conduit information.
7. For SMR #3 details, see sheet E-264E.

NOTES:

1. References:
   - For typical conduit ~~installation details~~, see sheets E-268, E-286A and E-286B. 2
   - For utility panel ~~UP-210-1A and UP-210-1B~~ panel schedules, see sheets E-279 and E-280.
   - For types of pull boxes, splice boxes and enclosures, see sheets E-83 and E-169.
   - For conduit and cable tray schedules, see sheets starting at E-401.
   - For lighting installation details, see sheet E-267.
   - For lighting fixture schedule, see sheet E-273.
2. All conduits and fittings routed exposed at grating shall be rigid galvanized steel, PVC coated.
3. Fixture mounting height elevation shall be 2.125 m above floor/platform elevation UNO.
4. Electrical conduits shall enter the tower shafts between stiffeners A3 and A4 only. For conduit entry details, see Structural Utility drawings.
5. For other related work not shown on this sheet, see Electrical Special Provisions.

REGISTERED PROFESSIONAL ENGINEER DAVID H. OTO No. 10699 Exp. 06/30/2015 ELECTRICAL STATE OF CALIFORNIA

FOR REVISION ONLY 3 4 5

THIS PLAN ACCURATE FOR ELECTRICAL WORK ONLY.

ALL DIMENSIONS ARE IN MILLIMETERS UNLESS OTHERWISE SHOWN

DETAILS
TOWER AND SUSPENSION CABLE
TOWER POWER AND LIGHTING

SCALE: AS NOTED

E-285

REVISED BY	DATE REVISED
FK	EDC

DATE 10/01 | 11/01

CALCULATED/DESIGNED BY | CHECKED BY

DESIGN OVERSIGHT
BEHZAD GOLEMOHAMMADI

STATE OF CALIFORNIA - DEPARTMENT OF TRANSPORTATION
Caltrans

LAST REVISION 10-23-13 | DATE PLOTTED => 22-OCT-2013 | TIME PLOTTED => 11:25

FOR REDUCED PLANS ORIGINAL SCALE IS IN MILLIMETERS 0 20 40 60 80

DGN FILE =>04-0120f1_0288r05.dgn
USERNAME =>Llorico

CU 04251 | EA 0120F1