DIST	COUNTY	ROUTE	KILOMETER POST TOTAL PROJECT	SHEET No	TOTAL SHEETS
04	SF	80	13.2/13.9	105 S03	1204

REGISTERED ELECTRICAL ENGINEER 10/23/13 DATE

PLANS APPROVAL DATE

REGISTERED PROFESSIONAL ENGINEER DAVID H. OTO No. 10699 Exp. 06/30/2015 ELECTRICAL STATE OF CALIFORNIA

PB AMERICAS, Inc.
A Parsons Brinckerhoff Company
303 Second St., Suite 700N
San Francisco, CA 94107-1317

The State of California or its officers or agents shall not be responsible for the accuracy or completeness of electronic copies of this plan sheet.

Caltrans now has a web site! To get to the web site, go to http://www.dot.ca.gov

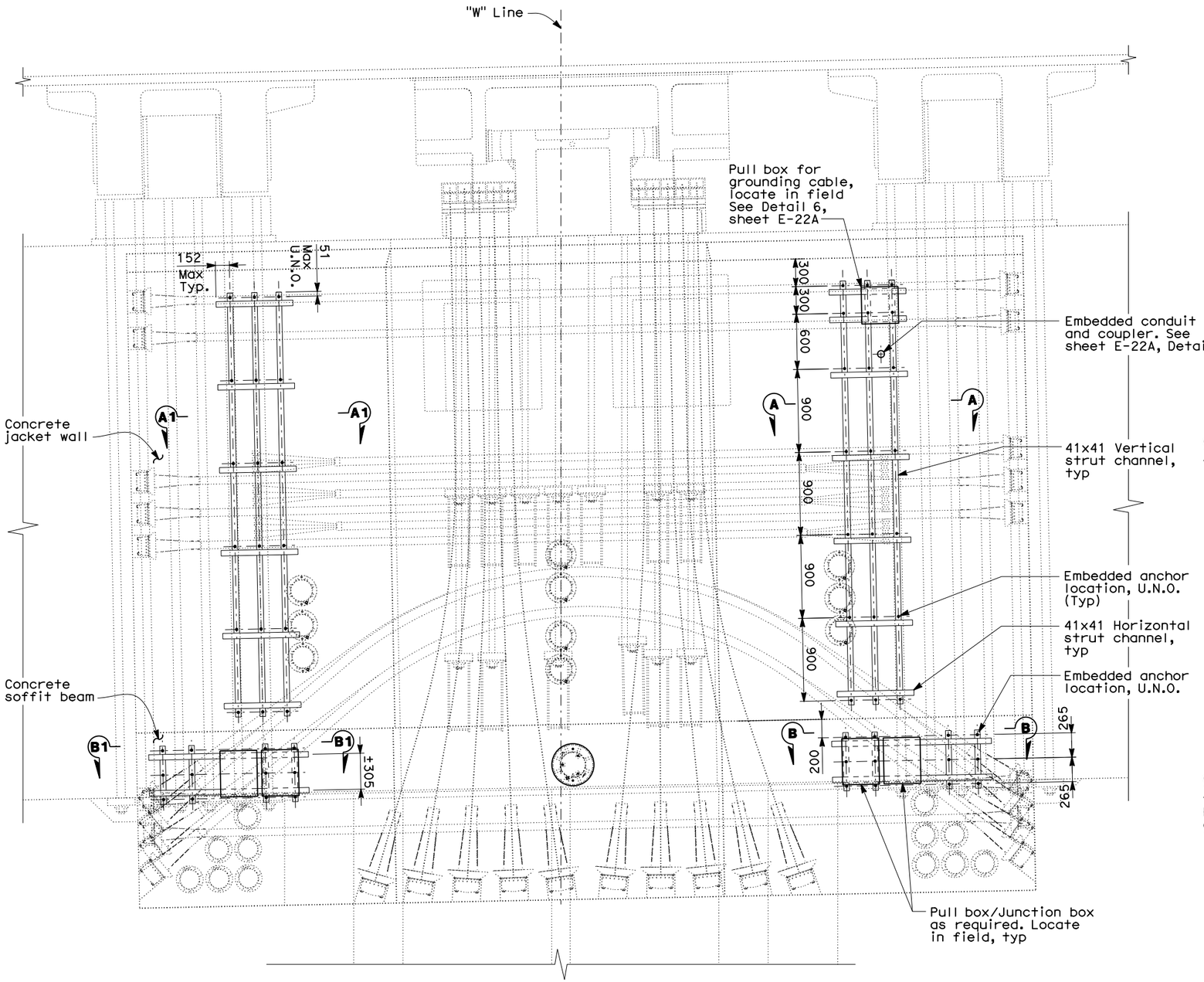

PIER E2 ELEVATION (1)

EAST FACE - LOOKING WEST, "W" LINE STATION "E" LINE, SIMILAR

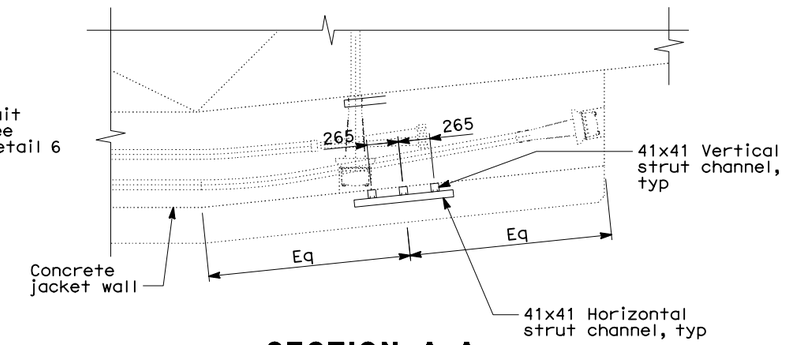

SECTION A-A

(SECTION A1-A1 OPPOSITE HAND)

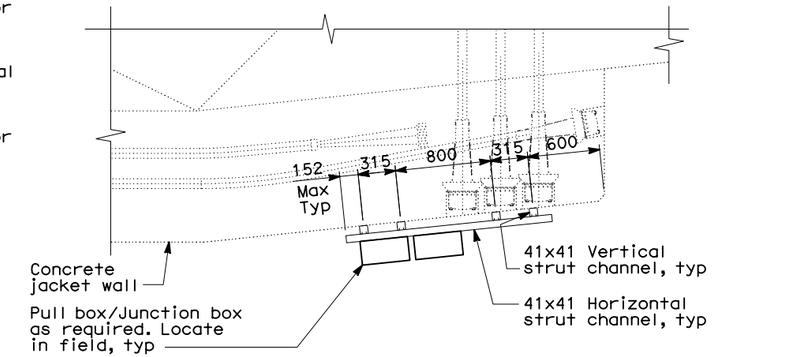

SECTION B-B

(SECTION B1-B1 OPPOSITE HAND)

SHEET NOTES:

(1) Dimensions are measured along lines perpendicular to the top face of Pier E2.

REQUEST FOR INFORMATION NOT ADDRESSED IN THIS CCO REMAIN IN FORCE					
0	10/23/13	ADDITIONAL SAS MISCELLANEOUS ELECTRICAL CHANGES	RG	DO	191S2
MARK	DATE	DESCRIPTIONS	BY	CH'D	CCO#
REVISIONS					

CONTRACT CHANGE ORDER NO._____

SHEET _____ OF _____

DETAILS
UNDERGROUND FOUNDATION GROUNDING

NO SCALE

E-22C

THIS PLAN ACCURATE FOR ELECTRICAL WORK ONLY.

ALL DIMENSIONS ARE IN MILLIMETERS UNLESS OTHERWISE SHOWN

FOR REDUCED PLANS ORIGINAL SCALE IS IN MILLIMETERS 0 20 40 60 80

DGN FILE =>04-0120f1_0105S03.dgn
USERNAME =>Llorico

CU 04251

EA 0120F1

DATE PLOTTED => 21-OCT-2013
TIME PLOTTED => 16:51

LAST REVISION 10-23-13

STATE OF CALIFORNIA - DEPARTMENT OF TRANSPORTATION

Caltrans

DESIGN OVERSIGHT BEHZAD GOLEMOHAMMADI

CALCULATED/DESIGNED BY RG DATE 10/13 REVISED BY
CHECKED BY DO 10/13 DATE REVISED