DIST	COUNTY	ROUTE	KILOMETER POST TOTAL PROJECT	SHEET No	TOTAL SHEETS
04	SF	80	13.2/13.9	155 R3	1204

Caltrans Metric

REGISTERED ELECTRICAL ENGINEER 2/6/04 DATE

12-6-04
PLANS APPROVAL DATE

PB POWER, Inc.
A Parsons Brinckerhoff Company
303 Second St., Suite 700N
San Francisco, CA 94107-1317

REGISTERED PROFESSIONAL ENGINEER JENS ERLINGSSON No. 8249 Exp. 9/30/06 ELECTRICAL STATE OF CALIFORNIA

The State of California or its officers or agents shall not be responsible for the accuracy or completeness of electronic copies of this plan sheet.

Caltrans now has a web site! To get to the web site, go to http://www.dot.ca.gov

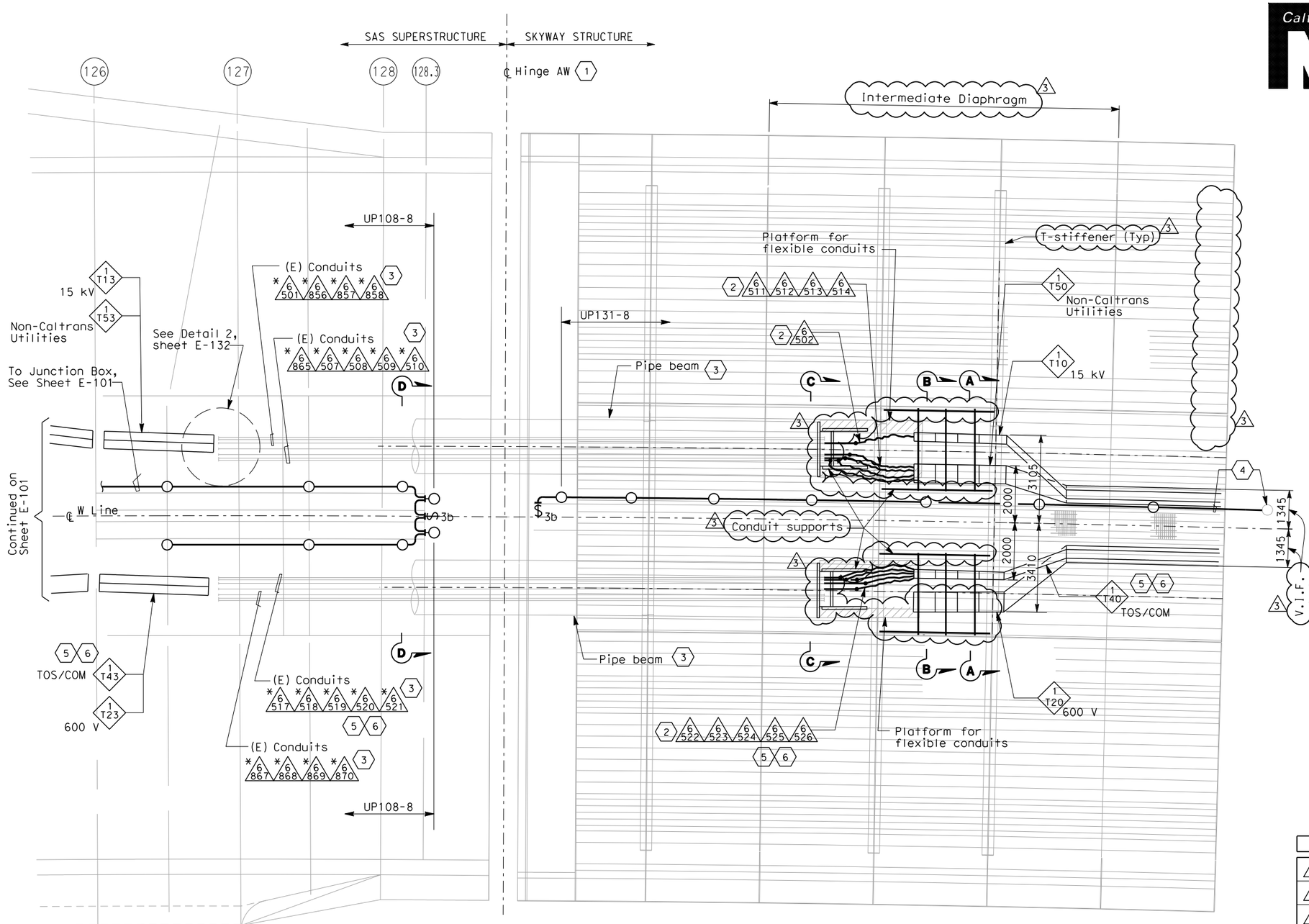

PLAN
SCALE: 1:75

SHEET NOTES:

1. Hinge AW electrical design is based on the maximum expansion joint movement opening of 1243 mm.
2. Arrange and group the flexible 103 mm conduits to maintain a minimum voltage level separation of 460 mm between systems.
3. Existing conduits (*) inside pipe beam are supplied in Skyway contract.
4. Terminate conduit to the next lighting fixture and splice wiring to circuit UP131-8 of Skyway Structure. Contractor to adjust as required.
5. Furnish and install 4-25.4 mm innerducts inside TOS/COM conduits (*6520, 6525) and 1-25.4 mm innerduct per BASE fiber optic cable in TOS/COM cable tray.
6. Furnish and install BASE fiber optic cable in innerduct inside TOS/COM conduit and cable tray. See sheet E-1100.

NOTES:

1. Minimum radius of cable tray fittings shall be 610 mm.
2. Minimum radius of 103 mm conduit bends shall be 610 mm.
3. Cables/circuits passing through the hinge locations shall be provided with cable identification tag at both ends of Hinge.
4. For additional work related not shown on this drawing, see Electrical Special Provisions.
5. Section A-A and B-B see sheet E-132B.
6. Section C-C and Section D-D, see sheet E-132C.

REQUEST FOR INFORMATION NOT ADDRESSED IN THIS CCO REMAIN IN FORCE

MARK	DATE	DESCRIPTIONS	BY	CH'D	CCO#
3	03/27/13	ADDITIONAL SAS MISCELLANEOUS ELECTRICAL CHANGES	RR RSB	RG	191S2
2	03/01/11	BASE INTEGRATION	RSB	WB	150
1	02/25/08	CABLE TRAY CHANGES	JD	RG SE	42S1

REVISIONS

CONTRACT CHANGE ORDER NO._____
SHEET _____ OF _____

REGISTERED PROFESSIONAL ENGINEER S. A. ESTOQUE, JR No. E-10151 Exp. 12/31/2008 ELECTRICAL STATE OF CALIFORNIA
FOR REVISION ONLY 1

REGISTERED PROFESSIONAL ENGINEER SYN YEE CHIN No. 18186 Exp. 09/30/2011 ELECTRICAL STATE OF CALIFORNIA
FOR REVISION ONLY 2

REGISTERED PROFESSIONAL ENGINEER DAVID H. OTO No. 10699 Exp. 06/30/2013 ELECTRICAL STATE OF CALIFORNIA
FOR REVISION ONLY 3

SAS SUPERSTRUCTURE AND SKYWAY STRUCTURE
GIRDER INTERFACE WESTBOUND
AS NOTED

E-101A

THIS PLAN IS ACCURATE FOR ELECTRICAL WORK ONLY.

ALL DIMENSIONS ARE IN MILLIMETERS UNLESS OTHERWISE SHOWN

FOR REDUCED PLANS ORIGINAL SCALE IS IN MILLIMETERS 0 20 40 60 80

DGN FILE =>04-0120f1_0155R03.dgn
USERNAME =>Melsheimer

CU 04251 EA 0120F1

DATE PLOTTED => 3/29/2013
TIME PLOTTED => 10:35:54 AM

LAST REVISION 03-27-13

STATE OF CALIFORNIA - DEPARTMENT OF TRANSPORTATION
Caltrans

DESIGN OVERSIGHT BEHZAD GOLEMOHAMMADI

CALCULATED/DESIGNED BY CYF DATE 12/03 REVISED BY EJL
CHECKED BY EJL 1/04 DATE REVISED 2/04

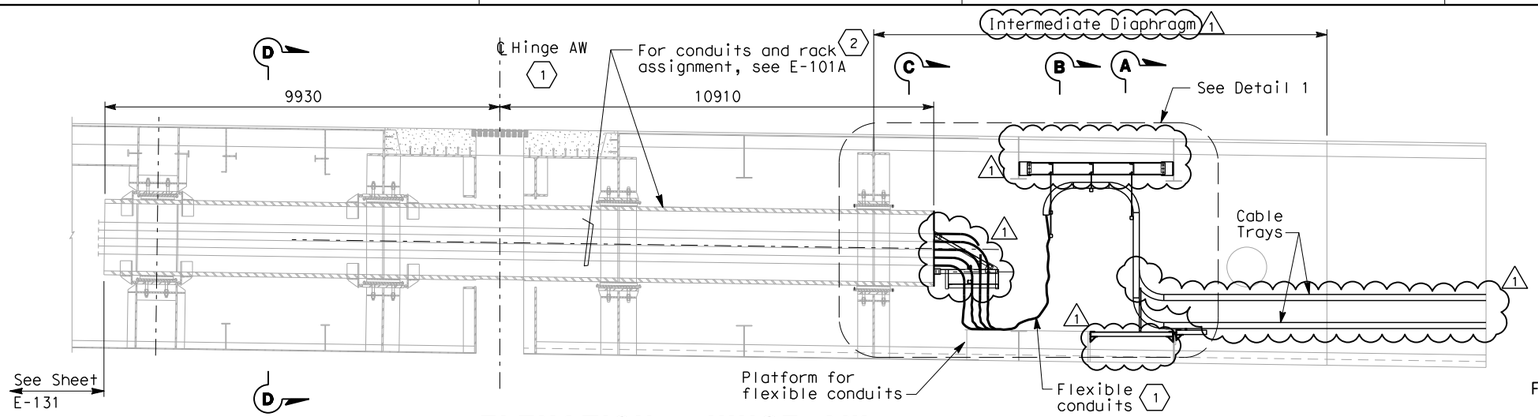

ELEVATION - HINGE AW

AT CENTERLINE OF PIPE BEAM
SCALE 1:75

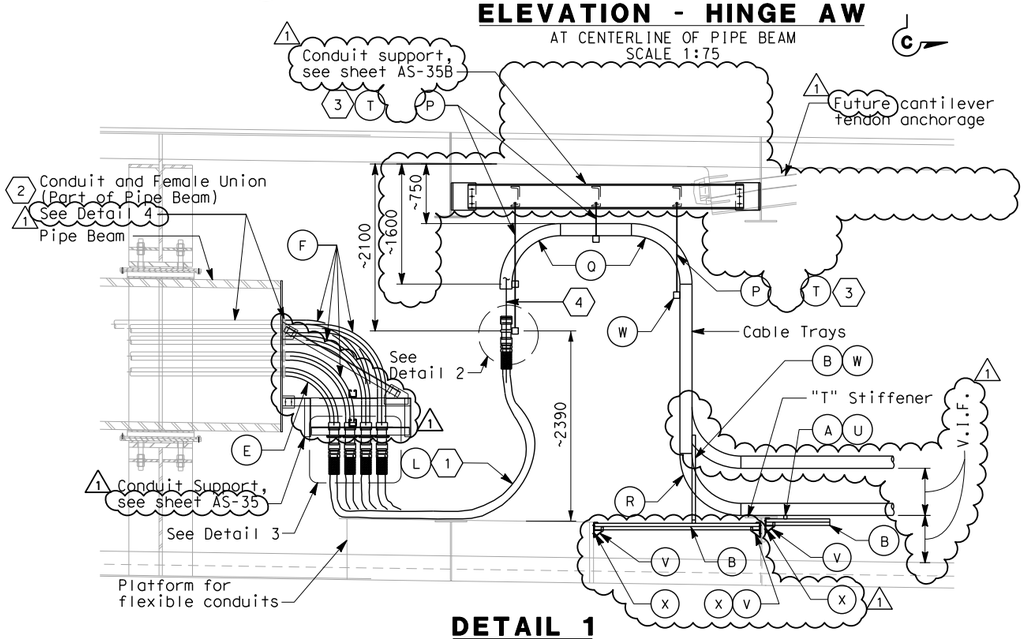

DETAIL 1

SCALE 1:40

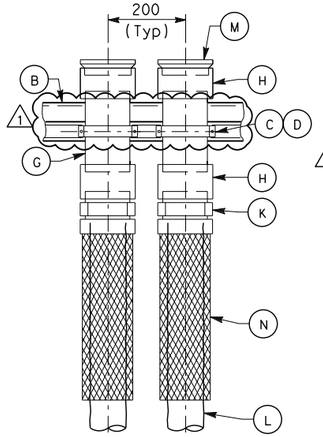

DETAIL 2

NO SCALE

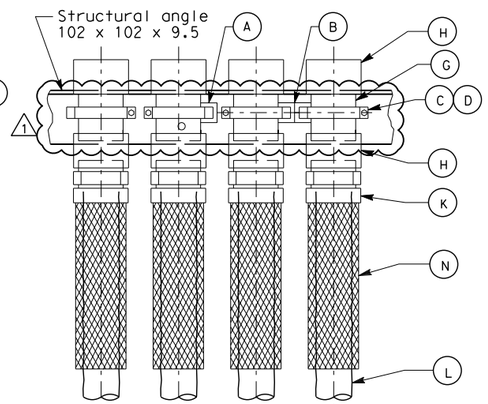

DETAIL 3

NO SCALE

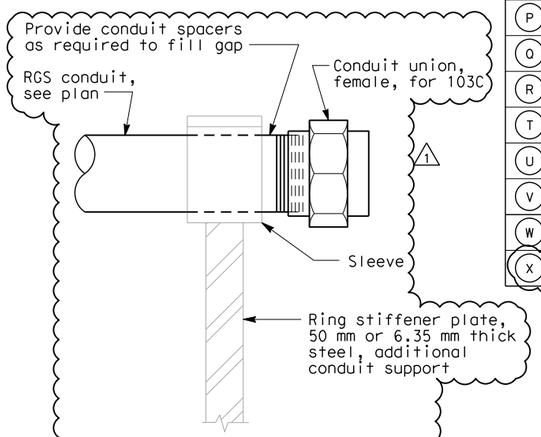

DETAIL 4

NO SCALE
TYPICAL CONDUIT END SUPPORT AT PIPE BEAM

MATERIAL LIST

Item No.	Description
A	Strut channel 41 mm x 41 mm
B	Strut channel combination 41 mm x 82 mm
C	Strut channel spring nut, lockwasher and hex bolt
D	Strut channel conduit clamp for 103 mm
E	Conduit elbow for 103 mm (Radius= 610 mm)
F	Conduit elbow for 103 mm (Radius= 752 mm)
G	Conduit nipple, 103 mm
H	Conduit coupling, 103 mm
J	DELETED 1
K	Connector, straight liquidtight flexible conduit for 103 mm
L	Liquidtight flexible conduit, 103 mm
M	Insulated bushed nipple for 103 mm conduit
N	Strain relief grips or AMTEC conduit riser grip for flexible conduit, 103 mm 1
P	Threaded steel hanger rod, 12 mm diameter
Q	Cable tray vertical outside bend
R	Cable tray vertical inside bend
T	Strut channel spring nut, tee-head bolt
U	Strut channel cable tray clamp for ladder or solid bottom tray
V	Bracket for 82 mm X 82 mm Strut Channel
W	Vertical tray hanger with splice plate hardware (bolted to side rail)
X	13Ø Bolt thru 'T' stiffener web/platform support w/ nut and washer 1

FOR REVISION ONLY
1

SHEET NOTES:

1. Hinge AW electrical design is based on the maximum expansion joint movement opening of 1243 mm.
2. Conduits through pipe beam shall be part of the pipe beam assembly. Conduit shall be welded together to form a continuous conduit inside the pipe beam, length as specified. The weld shall be smooth on the outside and free of burrs inside the conduit. Conduit fittings, like coupling, etc. to form a continuous conduit shall not be permitted as alternative. Pipe beam supplied by Skyway Structure.

   The intent of the conduit design is to be able to remove the entire length of conduit inside the pipe beam, in case maintenance is required inside the pipe beam assembly.
3. Cable tray hangers shall be located to provide working space in front of Cantilever tendon anchorage. Field to adjust location accordingly, additional supports as required.
4. All cable/cables entering the liquidtight conduits from the cable trays shall be provided with strain relief cable/cables grips or AMTEC conduit riser grip 1 attached from the vertical cable tray rungs. 1

NOTES:

1. Minimum radius of cable tray fittings shall be 610 mm.
2. Minimum radius of 103 mm conduit bends shall be 610 mm.
3. Cables/circuits passing through the hinge locations shall be provided with cable identification tag at both ends of Hinge.
4. For additional work related not shown on this drawing, see Electrical Special Provisions.
5. For Sections A-A and B-B, see sheet E-132B.
6. Sections C-C and D-D, see sheet E-132C.

REQUEST FOR INFORMATION NOT ADDRESSED IN THIS CCO REMAIN IN FORCE

MARK	DATE	DESCRIPTIONS	BY	CH'D	CCO#
		REVISIONS			
1	03/27/13	ADDITIONAL SAS MISCELLANEOUS ELECTRICAL CHANGES	RR RSB	RG	191S2

CONTRACT CHANGE ORDER NO._____
SHEET _____ OF _____

DETAILS
SAS SUPERSTRUCTURE AND SKYWAY STRUCTURE GIRDER INTERFACE WESTBOUND HINGE AW

SCALE AS NOTED

E-132A

DIST	COUNTY	ROUTE	KILOMETER POST TOTAL PROJECT	SHEET No	TOTAL SHEETS
04	SF	80	13.2/13.9	185 R1	1204

Jens Erlingsson 2/6/04
REGISTERED ELECTRICAL ENGINEER DATE

12-6-04
PLANS APPROVAL DATE

REGISTERED PROFESSIONAL ENGINEER — JENS ERLINGSSON No. 8249 Exp. 9/30/06 ELECTRICAL — STATE OF CALIFORNIA

REGISTERED PROFESSIONAL ENGINEER — DAVID H. OTO No. 10699 Exp. 06/30/2013 ELECTRICAL — STATE OF CALIFORNIA

PB POWER, Inc.
A Parsons Brinckerhoff Company
303 Second St., Suite 700N
San Francisco, CA 94107-1317

The State of California or its officers or agents shall not be responsible for the accuracy or completeness of electronic copies of this plan sheet.

Caltrans now has a web site! To get to the web site, go to http://www.dot.ca.gov

DESIGN OVERSIGHT	CALCULATED/ DESIGNED BY	CHECKED BY	DRAWN BY	CHECKED BY	DATE REVISED	REVISED BY
BEHZAD GOLEMOHAMMADI	CYF	EJL	EJL	EJL	1/04	2/04

STATE OF CALIFORNIA - DEPARTMENT OF TRANSPORTATION
Caltrans

LAST REVISION 03-27-13
DATE PLOTTED => 3/29/2013
TIME PLOTTED => 10:36:15 AM

FOR REDUCED PLANS ORIGINAL SCALE IS IN MILLIMETERS 0 20 40 60 80

DGN FILE =>04-0120f1_0185R01.dgn
USERNAME =>Melsheimer

CU 04251

EA 0120F1

DIST	COUNTY	ROUTE	KILOMETER POST TOTAL PROJECT	SHEET No	TOTAL SHEETS
04	SF	80	13.2/13.9	186 R1	1204

Caltrans Metric

REGISTERED ELECTRICAL ENGINEER 2/6/04 DATE

12-6-04
PLANS APPROVAL DATE

PB POWER, Inc.
A Parsons Brinckerhoff Company
303 Second St., Suite 700N
San Francisco, CA 94107-1317

REGISTERED PROFESSIONAL ENGINEER JENS ERLINGSSON No. 8249 Exp. 9/30/06 ELECTRICAL STATE OF CALIFORNIA

The State of California or its officers or agents shall not be responsible for the accuracy or completeness of electronic copies of this plan sheet.

Caltrans now has a web site! To get to the web site, go to http://www.dot.ca.gov

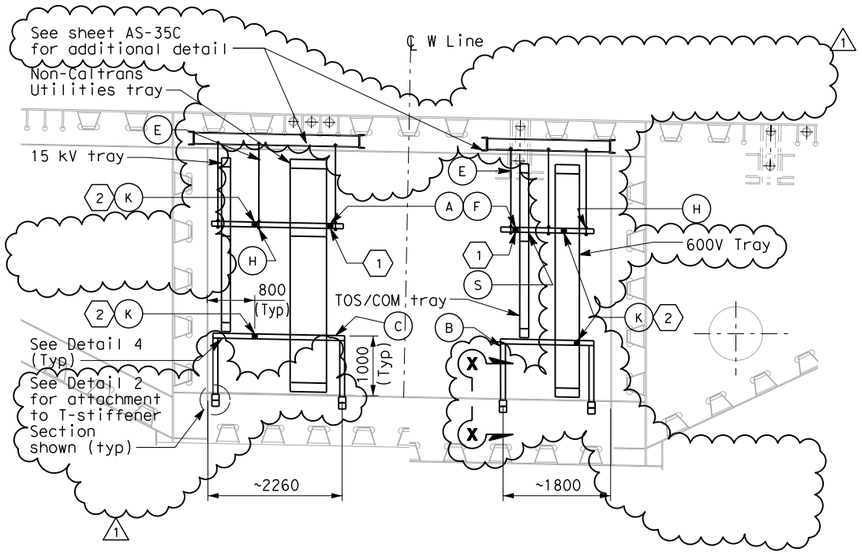

SECTION A-A
SCALE 1:50

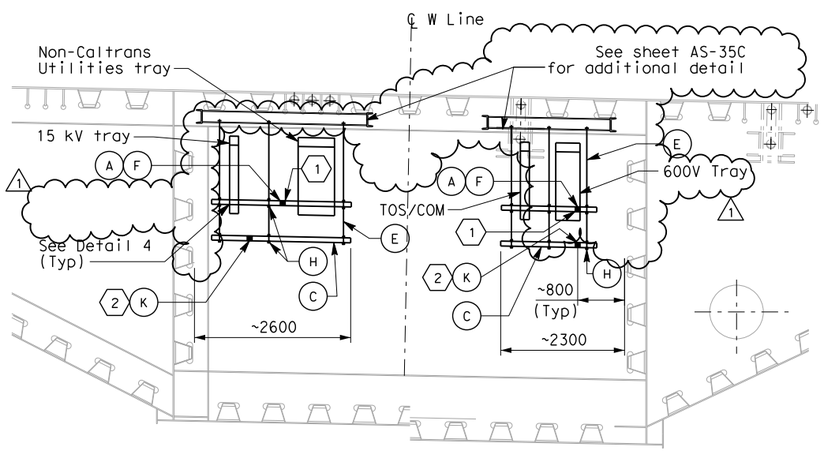

SECTION B-B
SCALE 1:50

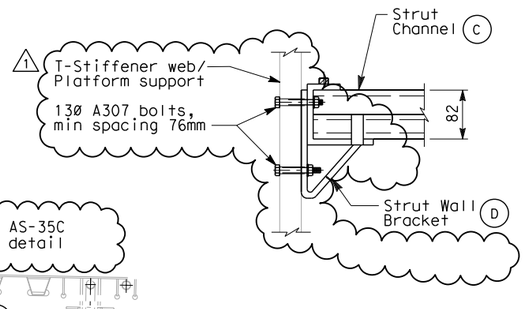

DETAIL 2
(TYPICAL BRACKET TRAY SUPPORT)
SCALE 1:5

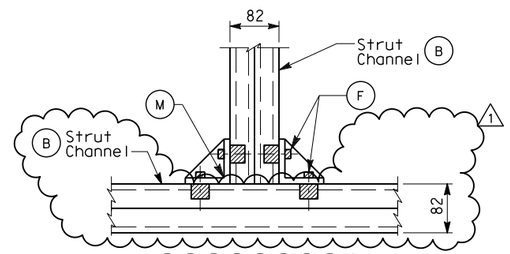

SECTION X-X
(TYPICAL BRACKET SUPPORT)
SCALE 1:5

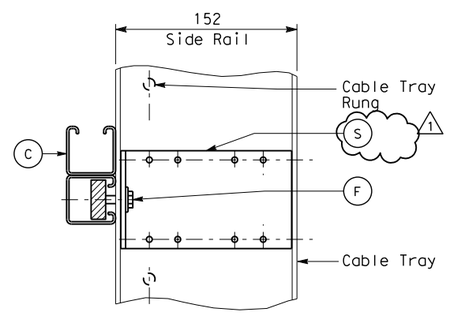

DETAIL 4
(TYPICAL VERTICAL CABLE TRAY SUPPORT)
SCALE 1:2.5

SHEET NOTES:

1. For seismic bracing, use strut channel installed diagonally to connect horizontal member of one hanger to horizontal member of adjacent hanger. See Sections A-A and B-B for connecting points.
2. For seismic bracing, use strut channel installed diagonally to connect horizontal member of tray support to adjacent support.

NOTES:

1. Materials, hardware and fittings shall be galvanized or stainless steel. For additional requirements, see Electrical Special Provisions.
2. References:
   - For plans and sections, see sheets E-101A and E-132A.

MATERIAL LIST

Item No.	Description	Remarks
A	Strut channel, 41 mm x 41 mm	Length as required
B	Strut channel, 41 mm x 82 mm	Length as required
C	Strut channel combination, 41 mm x 82 mm	Length as required
D	Strut wall bracket	
E	Threaded steel hanger rod, 12 mm diameter	Length as required
F	Strut channel spring nut, lockwasher and hex bolt	
H	Strut channel hanger trapeze hardware kit	
J	DELETED	
K	Strut channel brace fittings for horizontal seismic support	Length as required
M	Strut channel wing shape fitting	
R	DELETED	
S	Vertical tray hanger with splice plate hardware (Bolted to side rail)	

REQUEST FOR INFORMATION NOT ADDRESSED IN THIS CCO REMAIN IN FORCE

MARK	DATE	DESCRIPTIONS	BY	CH'D	CCO#
1	03/27/13	ADDITIONAL SAS MISCELLANEOUS ELECTRICAL CHANGES	RR RSB	RG	191S2

REVISIONS

CONTRACT CHANGE ORDER NO._____
SHEET _____ OF _____

REGISTERED PROFESSIONAL ENGINEER DAVID H. OTO No. 10699 Exp. 06/30/2013 ELECTRICAL STATE OF CALIFORNIA

FOR REVISION ONLY

DETAILS
SAS SUPERSTRUCTURE AND SKYWAY STRUCTURE GIRDER INTERFACE WESTBOUND HINGE AW TRAY SUPPORTS
SCALE AS NOTED

E-132B

STATE OF CALIFORNIA - DEPARTMENT OF TRANSPORTATION
Caltrans

DESIGN OVERSIGHT: BEHZAD GOLEMOHAMMADI

CALCULATED/ DESIGNED BY	EJL	DATE 12/03	REVISED BY	EJL
CHECKED BY	CYF	1/04	DATE REVISED	2/04

DATE PLOTTED => 3/29/2013
TIME PLOTTED => 11:34:49 AM
LAST REVISION 03-27-13

FOR REDUCED PLANS ORIGINAL SCALE IS IN MILLIMETERS 0 20 40 60 80

DGN FILE =>04-0120f1_0186R01.dgn
USERNAME =>Melsheimer

CU 04251 EA 0120F1

DIST	COUNTY	ROUTE	KILOMETER POST TOTAL PROJECT	SHEET No	TOTAL SHEETS
04	SF	80	13.2/13.9	187 R3	1204

REGISTERED ELECTRICAL ENGINEER — 2/6/04 DATE

12-6-04
PLANS APPROVAL DATE

REGISTERED PROFESSIONAL ENGINEER — JENS ERLINGSSON No. 8249 Exp. 9/30/06 ELECTRICAL — STATE OF CALIFORNIA

PB POWER, Inc.
A Parsons Brinckerhoff Company
303 Second St., Suite 700N
San Francisco, CA 94107-1317

The State of California or its officers or agents shall not be responsible for the accuracy or completeness of electronic copies of this plan sheet.

Caltrans now has a web site! To get to the web site, go to http://www.dot.ca.gov

Caltrans Metric

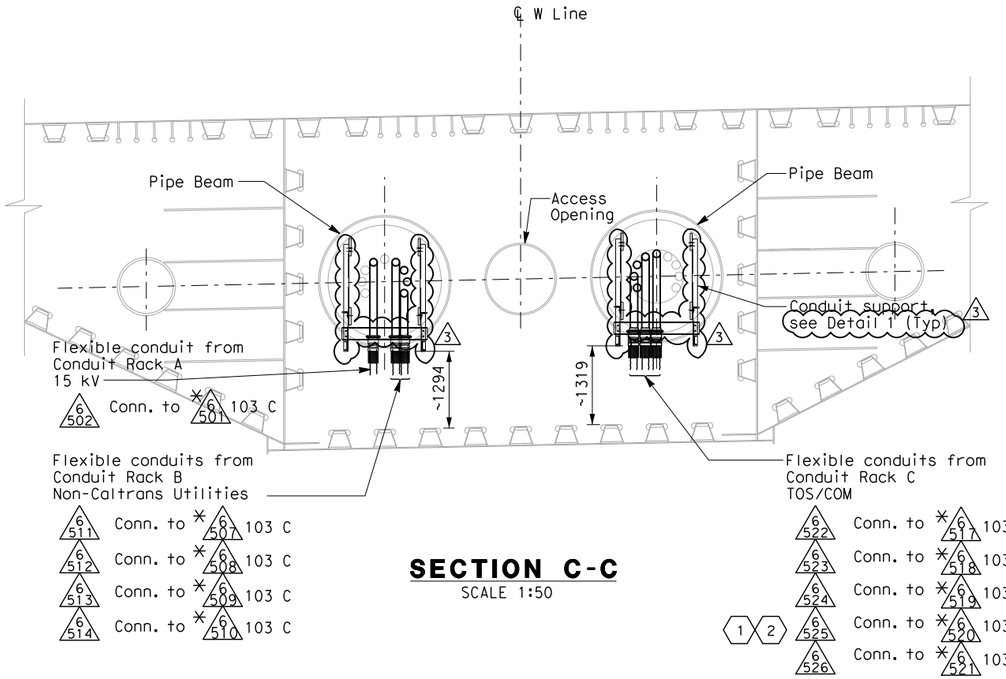

SECTION C-C
SCALE 1:50

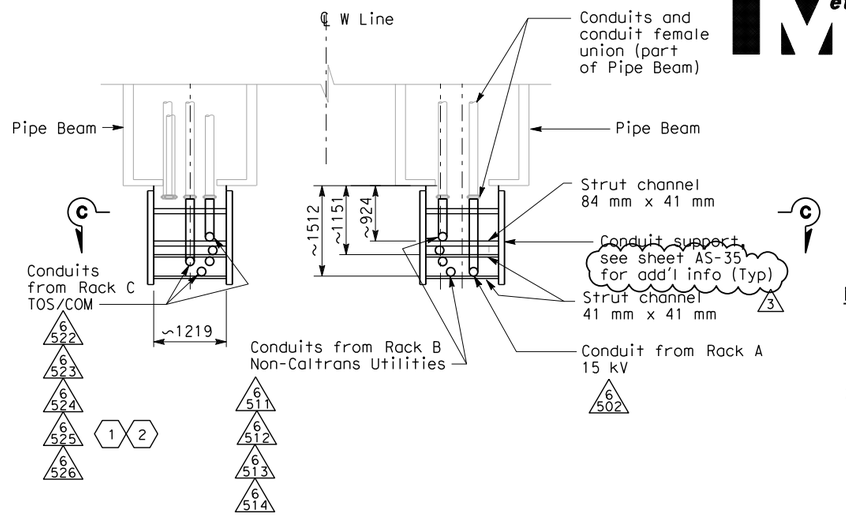

PLAN - DETAIL 1
SCALE 1:50

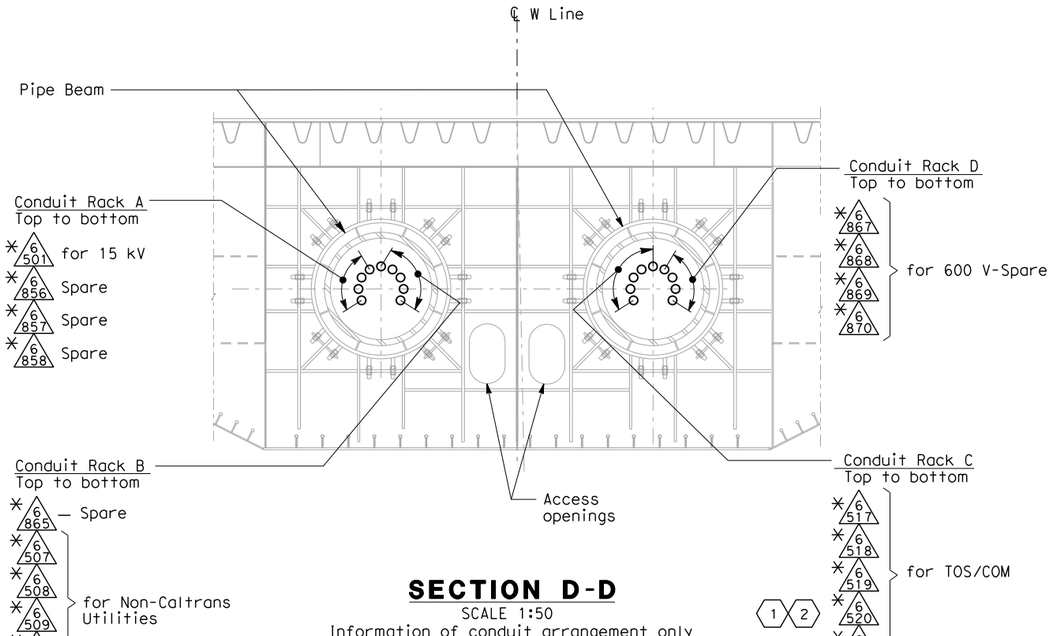

SECTION D-D
SCALE 1:50
Information of conduit arrangement only
(Conduits are part of Pipe Beams)

NOTES:

1. Materials, hardware and fittings shall be galvanized or stainless steel. For additional requirements, see Electrical Special Provisions.
2. References:
   - For Westbound plans and sections, see sheets E-101A and E-132A.
3. Existing conduits (*) inside pipe beam are supplied in Skyway contract.

SHEET NOTES:

(1) Furnish and install 4-25.4 mm innerducts inside TOS/COM conduits (*6520, 6525) and 1-25.4 mm innerduct per BASE fiber optic cable in TOS/COM cable tray.

(2) Furnish and install BASE fiber optic cable in innerduct inside TOS/COM conduit and cable tray. See sheet E-1100.

REGISTERED PROFESSIONAL ENGINEER — DAVID H. OTO No. 10699 Exp. 06/30/2013 ELECTRICAL — STATE OF CALIFORNIA
FOR REVISION ONLY (3)

REGISTERED PROFESSIONAL ENGINEER — SYN YEE CHIN No. 18186 Exp. 09/30/2011 ELECTRICAL — STATE OF CALIFORNIA
FOR REVISION ONLY (2)

REGISTERED PROFESSIONAL ENGINEER — S. A. ESTOQUE, JR. No. E-10151 Exp. 12/31/2008 ELECTRICAL — STATE OF CALIFORNIA
FOR REVISION ONLY (1)

REQUEST FOR INFORMATION NOT ADDRESSED IN THIS CCO REMAIN IN FORCE

MARK	DATE	DESCRIPTIONS	BY	CH'D	CCO#
		REVISIONS			
3	03/27/13	ADDITIONAL SAS MISCELLANEOUS ELECTRICAL CHANGES	RR RSB	RG	191S2
2	03/01/11	BASE INTEGRATION	RSB	WB	150
1	02/25/08	CABLE TRAY CHANGES	JD	RG SE	42S1

CONTRACT CHANGE ORDER NO._____
SHEET _____ OF _____

DETAILS
SAS SUPERSTRUCTURE AND SKYWAY STRUCTURE GIRDER INTERFACE WESTBOUND HINGE AW SUPPORTS
SCALE AS NOTED

E-132C

CALCULATED/ DESIGNED BY	CHECKED BY	CVF	EJL	DATE 12/03	I/04	REVISED BY	EJL	DATE REVISED	2/04

DESIGN OVERSIGHT — BEHZAD GOLEMOHAMMADI

STATE OF CALIFORNIA - DEPARTMENT OF TRANSPORTATION — Caltrans

THIS PLAN ACCURATE FOR ELECTRICAL WORK ONLY.

ALL DIMENSIONS ARE IN MILLIMETERS UNLESS OTHERWISE SHOWN

FOR REDUCED PLANS ORIGINAL SCALE IS IN MILLIMETERS 0 20 40 60 80

DGN FILE =>04-0120f1_0187R03.dgn
USERNAME =>Melsheimer

CU 04251 | EA 0120F1

LAST REVISION 03-27-13 — DATE PLOTTED => 3/29/2013 TIME PLOTTED => 10:37:02 AM

DIST	COUNTY	ROUTE	KILOMETER POST TOTAL PROJECT	SHEET NO.	TOTAL SHEETS
04	SF	80	13.2/13.9	214R2	1204

Caltrans Metric

REGISTERED ENGINEER-CIVIL

12-6-04
PLANS APPROVAL DATE

REGISTERED PROFESSIONAL ENGINEER — T. W. SPARKS — No. E16039 — Exp. 9-30-13 — ELECTRICAL — STATE OF CALIFORNIA

The State of California or its officers or agents shall not be responsible for the accuracy or completeness of electronic copies of this plan sheet.

T.Y. LIN / MOFFATT & NICHOL
825 BATTERY STREET
SAN FRANCISCO, CA 94111

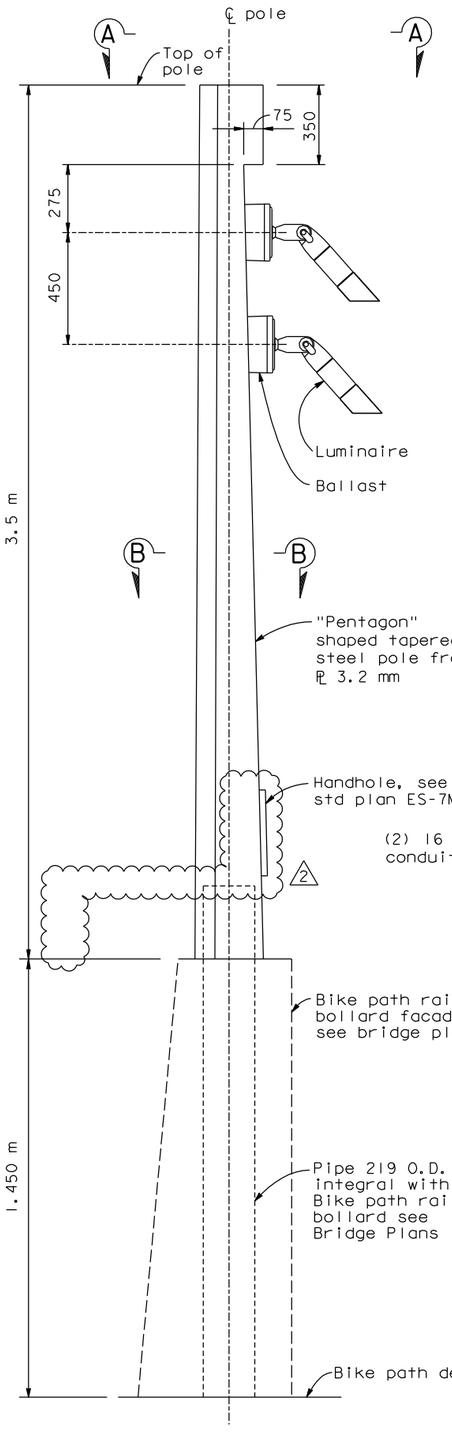

ELEVATION

POLE DETAIL

Not to scale

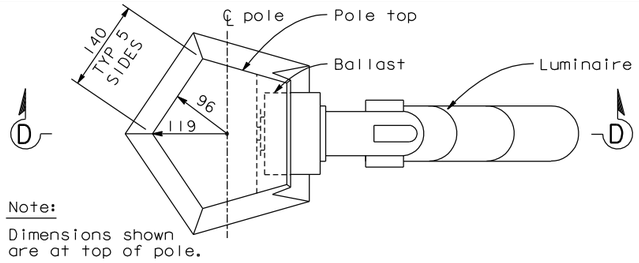

Note:
Dimensions shown are at top of pole.

SECTION A-A

Not to scale

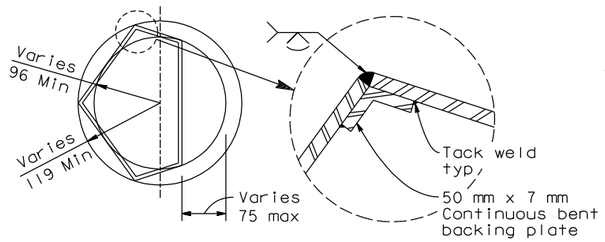

SECTION B-B

Not to scale

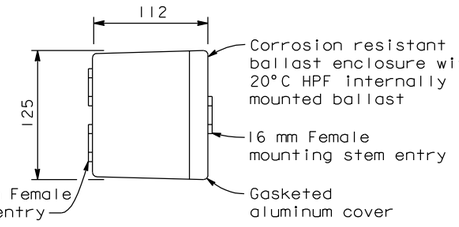

BALLAST - TOP VIEW

Not to scale

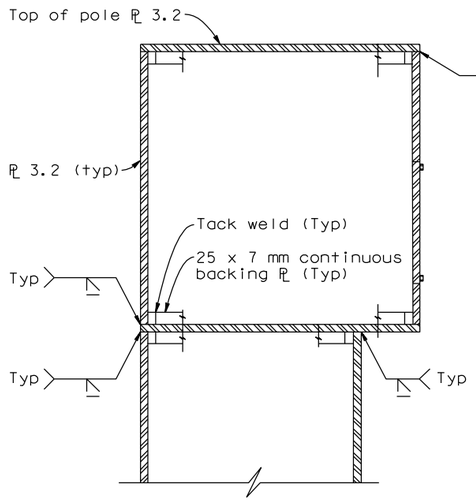

DETAIL AT TOP OF POLE

Not to scale

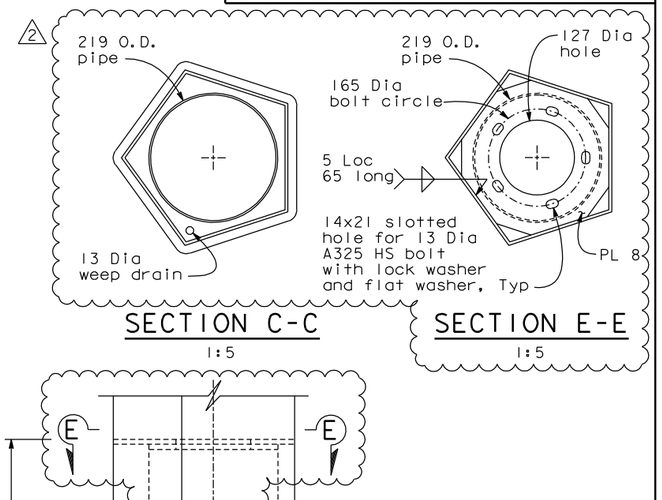

SECTION C-C

1:5

SECTION E-E

1:5

Pole notes:

1. Wind Loading: 190 km/h velocity (at bridge deck) AASHTO
2. All welding continuous unless otherwise noted on the plans. All welding to be done in accordance with the standard specifications.
3. Pole details shall be submitted to the engineer for approval.
4. For pole finish see special provisions.
5. For additional notes see std plan ES-7M.

Luminaire fixture notes:

1. Finish: Double chromate conversion undercoating with thermoplastic polyester powder coat finish.
2. Hardware: Stainless steel corrosion resistant.
3. U.L. Listed wet location.
4. Beam spread: 30°
5. Lamp: 35 watt, par 20 metal halide

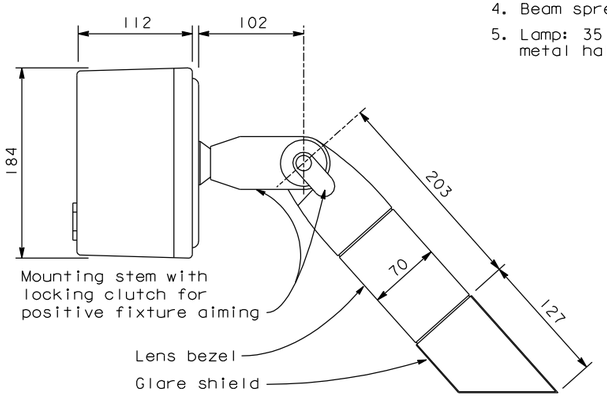

FIXTURE DETAIL

Not to scale

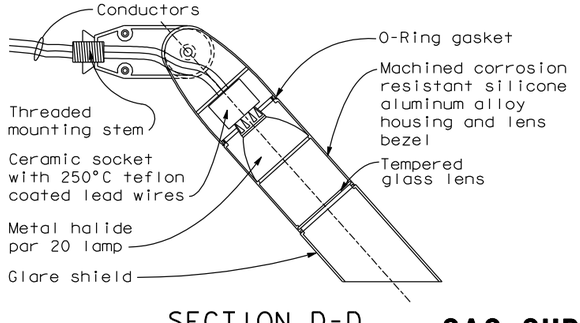

SECTION D-D

Not to scale

SLIP JOINT DETAIL

(Verify fit with Bike path railing bollard fabricator)

1:5

* * * POLES WILL BE STATE FURNISHED * * *
DETAILS ARE SHOWN IN CONTRACT NO. BATA 007

CONTRACT CHANGE ORDER NO. ____
SHEET ____ OF ____

REQUESTS FOR INFORMATION NOT ADDRESSED IN THIS CCO REMAIN IN FORCE

MARK	DATE	DESCRIPTIONS	BY	CH'D	CCO#
2	03/08/13	ADDITIONAL MISCELLANEOUS ELECTRICAL	JB	TS	191S2
1	04/22/11	STATE FURNISHED LIGHT POLES	JB	TS	43S1
REVISIONS					

DETAILS

SAS SUPERSTRUCTURE ROADWAY EASTBOUND TYPICAL BELVEDERE LIGHTING

SCALE AS NOTED

E-173

ALL DIMENSIONS ARE IN MILLIMETERS UNLESS OTHERWISE SHOWN.

DESIGN OVERSIGHT	CALCULATED/DESIGNED BY	DATE	REVISED BY	DATE REVISED
BOB ZANDIPOUR	CHECKED BY	10/00	TYL	10/00

STATE OF CALIFORNIA - DEPARTMENT OF TRANSPORTATION
Caltrans
SAS STRUCTURE

LAST REVISION 04-19-00
DATE PLOTTED => 08 MAR 2013
TIME PLOTTED => 09:02:40

FOR REDUCED PLANS ORIGINAL SCALE IN MILLIMETERS 0 20 40 60 80

FILE => I:\bb\04-012001\sas\contract plans and cco\cco\cco#191s2\original 03-08-13\dgn\401201ual173.dgn
USERNAME => DWinrow

CU 04251 EA 01201F1

DIST	COUNTY	ROUTE	KILOMETER POST TOTAL PROJECT	SHEET No	TOTAL SHEETS
04	SF	80	13.2/13.9	221 R3	1204

REGISTERED ELECTRICAL ENGINEER 2/6/04 DATE

12-6-04
PLANS APPROVAL DATE

PB POWER, Inc.
A Parsons Brinckerhoff Company
303 Second St., Suite 700N
San Francisco, CA 94107-1317

The State of California or its officers or agents shall not be responsible for the accuracy or completeness of electronic copies of this plan sheet.

Caltrans now has a web site! To get to the web site, go to http://www.dot.ca.gov

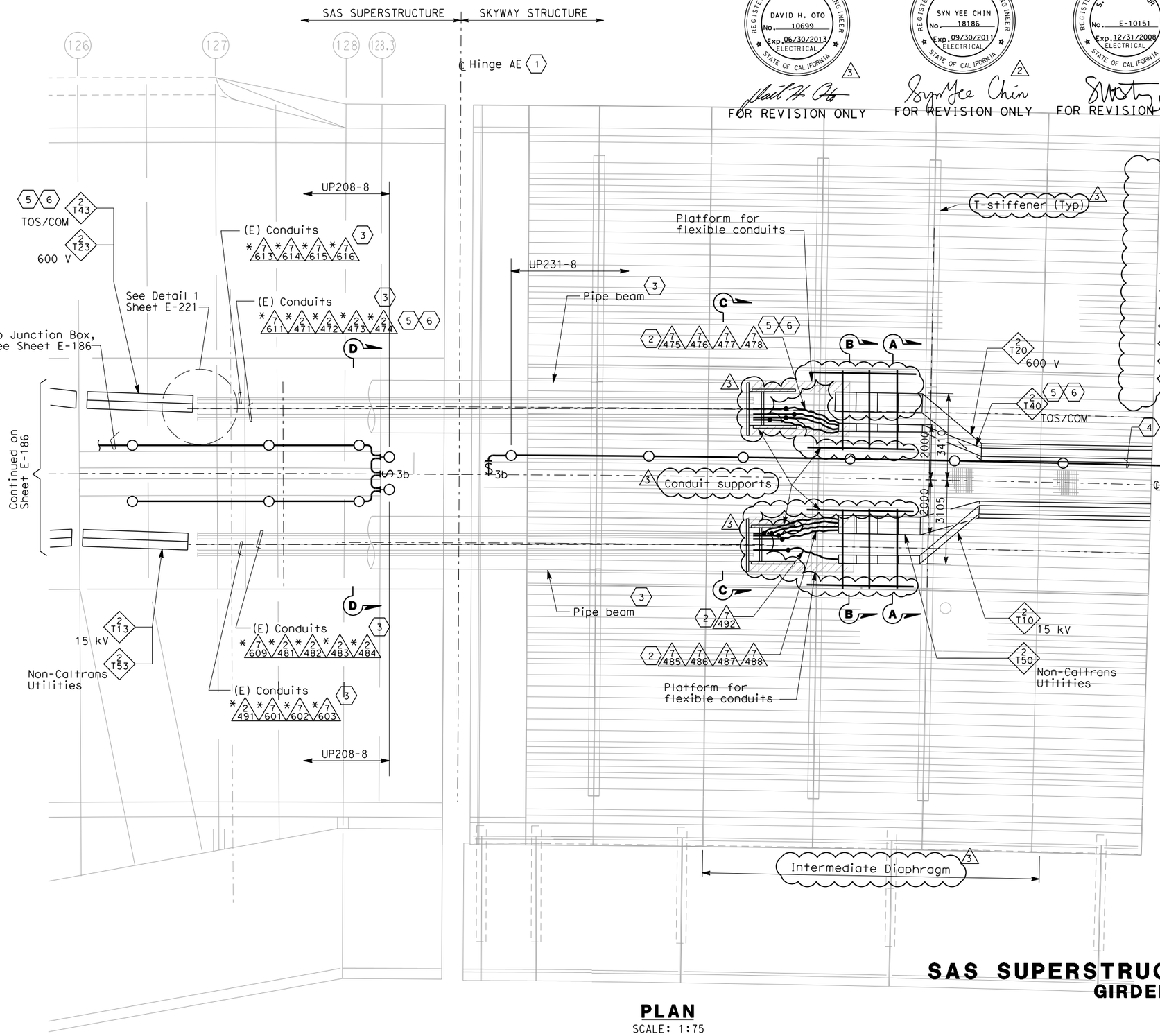

PLAN
SCALE: 1:75

SHEET NOTES:

1. Hinge AE electrical design is based on the maximum expansion joint movement opening of 1243 mm.
2. Arrange and group the flexible 103 mm conduits to maintain a minimum voltage level separation of 460 mm between systems.
3. Existing conduits(*) inside pipe beam are supplied in Skyway contract.
4. Terminate conduit to the next lighting fixture and splice wiring to circuit UP231-8 of Skyway Structure.
5. Furnish and install 4-25.4 mm innerducts inside TOS/COM conduits (*2474, 7478) and 1-25.4 mm innerduct per BASE fiber optic cable in TOS/COM cable tray.
6. Furnish and install BASE fiber optic cable in innerduct inside TOS/COM conduit and cable tray. See sheet E-1101.

NOTES:

1. Minimum radius of cable tray fittings shall be 610 mm.
2. Minimum radius of 103 mm conduits bends shall be 610 mm.
3. Cables/circuits passing through the hinge locations shall be provided with cable identification tag at both ends of Hinge.
4. For additional work related not shown on this drawing, see Electrical Special Provisions.
5. Section A-A and B-B see sheet E-221B.
6. Section C-C and Section D-D, see sheet E-221C.

REQUEST FOR INFORMATION NOT ADDRESSED IN THIS CCO REMAIN IN FORCE

MARK	DATE	DESCRIPTIONS	BY	CH'D	CCO#
3	03/27/13	ADDITIONAL SAS MISCELLANEOUS ELECTRICAL CHANGES	RR RSB	RG	191S2
2	03/01/11	BASE INTEGRATION	RSB	WB	150
1	02/25/08	CABLE TRAY CHANGES	JD	RG SE	42S1

REVISIONS

CONTRACT CHANGE ORDER NO._____
SHEET _____ OF _____

SAS SUPERSTRUCTURE AND SKYWAY STRUCTURE
GIRDER INTERFACE EASTBOUND
AS NOTED

E-186A

THIS PLAN ACCURATE FOR ELECTRICAL WORK ONLY.

ALL DIMENSIONS ARE IN MILLIMETERS UNLESS OTHERWISE SHOWN.

FOR REDUCED PLANS ORIGINAL SCALE IS IN MILLIMETERS 0 20 40 60 80

DGN FILE =>04-0120f1_0221R03.dgn
USERNAME =>Melsheimer

CU 04251 | EA 0120F1

DRAFT 1 (03/01/11)

STATE OF CALIFORNIA - DEPARTMENT OF TRANSPORTATION

Caltrans

DESIGN OVERSIGHT: BEHZAD GOLEMOHAMMADI

CALCULATED/DESIGNED BY: CYF | DATE: 12/03 | REVISED BY: EJL
CHECKED BY: EJL | 1/04 | DATE REVISED: 2/04

LAST REVISION 03-27-13 | DATE PLOTTED => 3/29/2013 | TIME PLOTTED => 10:37:28 AM

DIST	COUNTY	ROUTE	KILOMETER POST TOTAL PROJECT	SHEET No	TOTAL SHEETS
04	SF	80	13.2/13.9	241 R1	1204

Jens Erlingsson 2/6/04
REGISTERED ELECTRICAL ENGINEER DATE

12-6-04
PLANS APPROVAL DATE

REGISTERED PROFESSIONAL ENGINEER — JENS ERLINGSSON No. 8249 Exp. 9/30/06 ELECTRICAL — STATE OF CALIFORNIA

PB POWER, Inc.
A Parsons Brinckerhoff Company
303 Second St., Suite 700N
San Francisco, CA 94107-1317

The State of California or its officers or agents shall not be responsible for the accuracy or completeness of electronic copies of this plan sheet.

Caltrans now has a web site! To get to the web site, go to http://www.dot.ca.gov

REGISTERED PROFESSIONAL ENGINEER — DAVID H. OTO No. 10699 Exp. 06/30/2013 ELECTRICAL — STATE OF CALIFORNIA

FOR REVISION ONLY 1

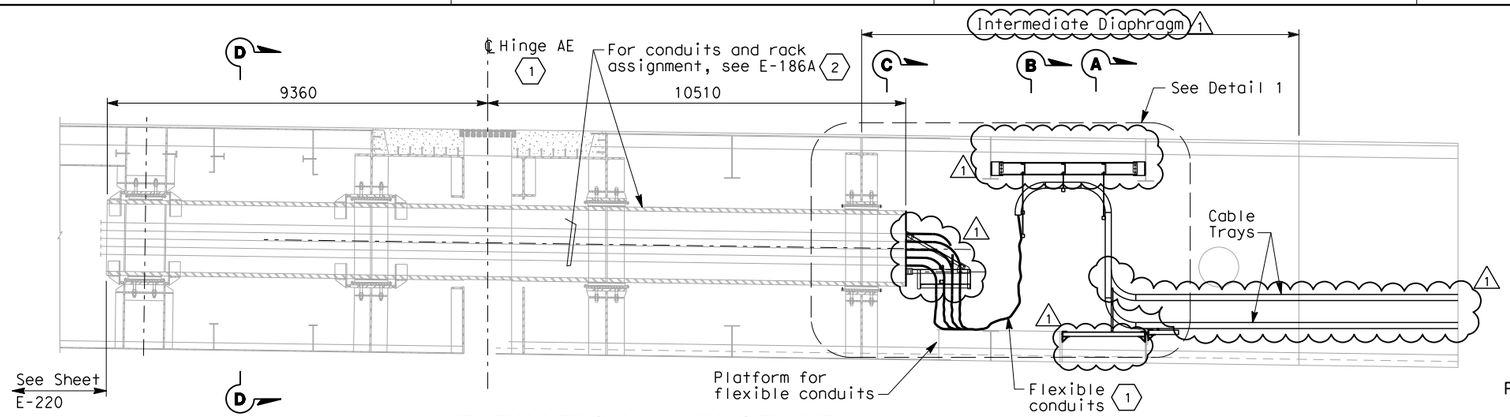

ELEVATION - HINGE AE

AT CENTERLINE OF PIPE BEAM
SCALE 1:75

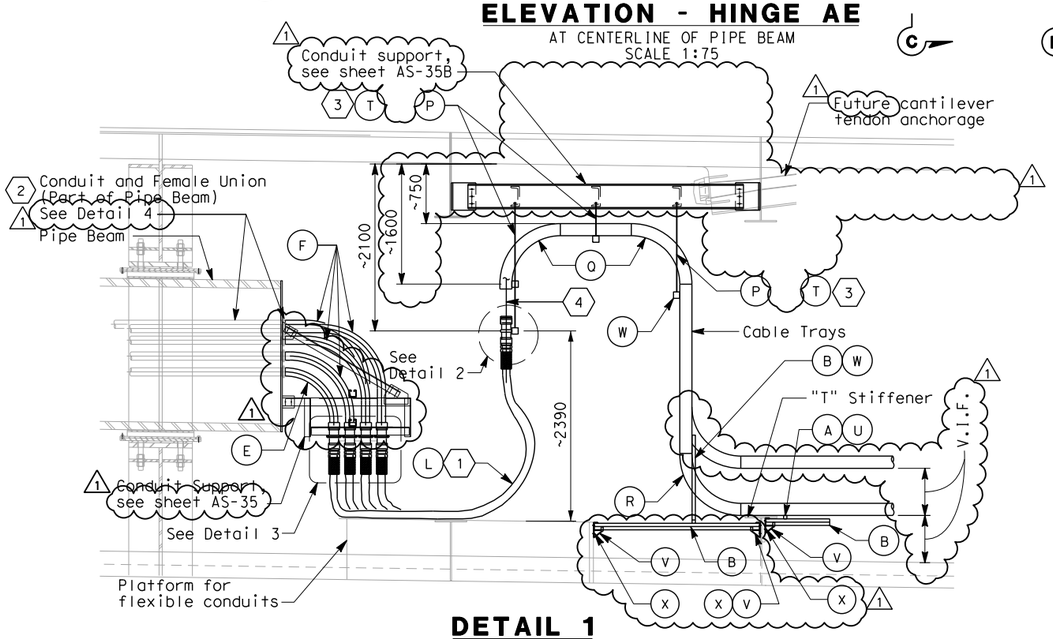

DETAIL 1

SCALE 1:40

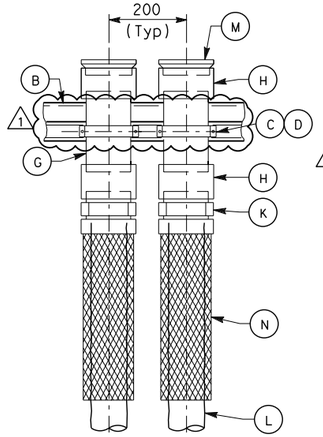

DETAIL 2

NO SCALE

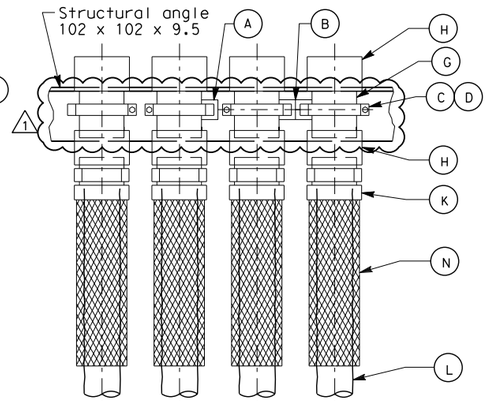

DETAIL 3

NO SCALE

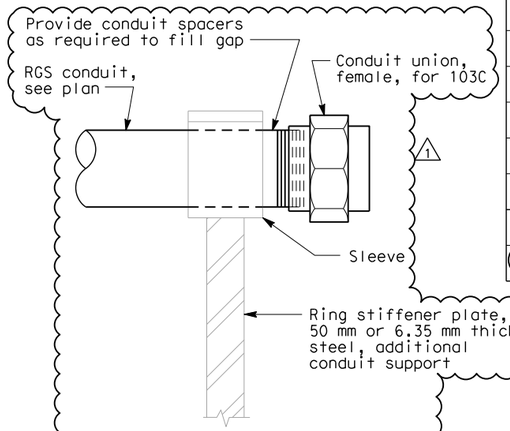

DETAIL 4

NO SCALE
TYPICAL CONDUIT END SUPPORT AT PIPE BEAM

MATERIAL LIST

Item No.	Description
A	Strut channel 41 mm x 41 mm
B	Strut channel combination 41 mm x 82 mm
C	Strut channel spring nut, lockwasher and hex bolt
D	Strut channel conduit clamp for 103 mm
E	Conduit elbow for 103 mm (Radius= 610 mm)
F	Conduit elbow for 103 mm (Radius= 752 mm)
G	Conduit nipple, 103 mm
H	Conduit coupling, 103 mm
J	DELETED 1
K	Connector, straight liquidtight flexible conduit for 103 mm
L	Liquidtight flexible conduit, 103 mm
M	Insulated bushed nipple for 103 mm conduit
N	Strain relief grips (or AMTEC conduit riser grip) for flexible conduit, 103 mm 1 1
P	Threaded steel hanger rod, 12 mm diameter
Q	Cable tray vertical outside bend
R	Cable tray vertical inside bend
T	Strut channel spring nut, tee-head bolt
U	Strut channel cable tray clamp for ladder or solid bottom tray
V	Bracket for 82 mm X 82 mm Strut Channel
W	Vertical tray hanger with splice plate hardware (bolted to side rail)
X	13Ø Bolt thru 'T' stiffener web/platform support w/ nut and washer 1

SHEET NOTES:

1. Hinge AE electrical design is based on the maximum expansion joint movement opening of 1243 mm.
2. Conduits through pipe beam shall be part of the pipe beam assembly. Conduit shall be welded together to form a continuous conduit inside the pipe beam, length as specified. The weld shall be smooth on the outside and free of burrs inside the conduit. Conduit fittings, like coupling, etc. to form a continuous conduit shall not be permitted as alternative. Pipe beam supplied by Skyway Structure.

   The intent of the conduit design is to be able to remove the entire length of conduit inside the pipe beam, in case maintenance is required inside the pipe beam assembly.
3. Cable tray hangers shall be located to provide working space in front of cantilever tendon anchorage. Field to adjust location accordingly, additional supports as required.
4. All cable/cables entering the liquidtight conduits from the cable trays shall be provided with strain relief cable/cables grips (or AMTEC conduit riser grip) attached from the vertical cable tray rungs. 1 1

NOTES:

1. Minimum radius of cable tray fittings shall be 610 mm.
2. Minimum radius of 103 mm conduit bends shall be 610 mm.
3. Cables/circuits passing through the hinge locations shall be provided with cable identification tag at both ends of Hinge.
4. For additional work related not shown on this drawing, see Electrical Special Provisions.
5. For Sections A-A and B-B, see sheet E-221B.
6. Sections C-C and D-D, see sheet E-221C.

REQUEST FOR INFORMATION NOT ADDRESSED IN THIS CCO REMAIN IN FORCE

MARK	DATE	DESCRIPTIONS	BY	CH'D	CCO#
		REVISIONS			
1	03/27/13	ADDITIONAL SAS MISCELLANEOUS ELECTRICAL CHANGES	RR RSB	RG	191S2

CONTRACT CHANGE ORDER NO._____
SHEET _____ OF _____

DETAILS
SAS SUPERSTRUCTURE AND SKYWAY STRUCTURE GIRDER INTERFACE EASTBOUND HINGE AE

SCALE: 1:200

E-221A

DESIGN OVERSIGHT	CALCULATED/ DESIGNED BY	CHECKED BY	DATE	REVISED BY
BEHZAD GOLEMOHAMMADI	CYF	EJL	12/03	EJL
	EJL		1/04	DATE REVISED
				2/04

STATE OF CALIFORNIA - DEPARTMENT OF TRANSPORTATION
Caltrans

LAST REVISION 03-27-13
DATE PLOTTED => 3/29/2013
TIME PLOTTED => 10:37:45 AM

FOR REDUCED PLANS ORIGINAL SCALE IS IN MILLIMETERS 0 20 40 60 80

DGN FILE =>04-0120f1_0241R01.dgn
USERNAME =>Melsheimer

CU 04251

EA 0120F1

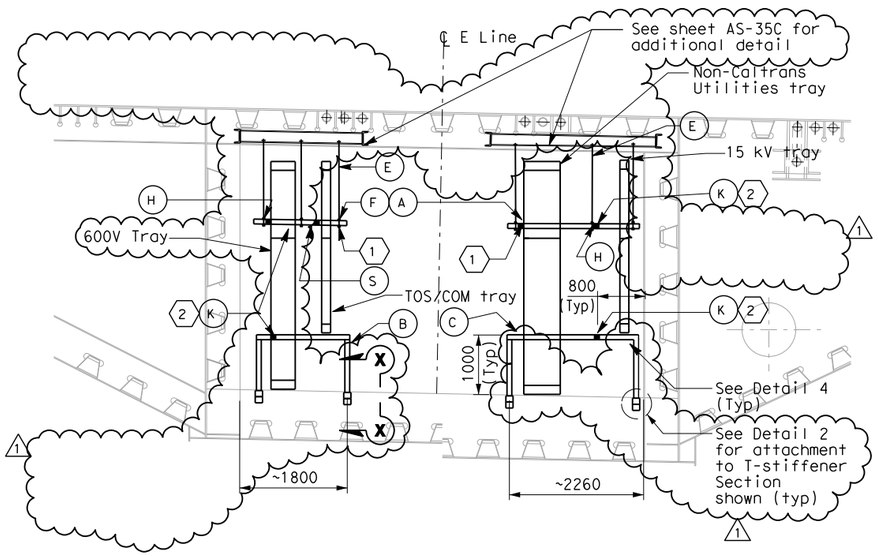

SECTION A-A
SCALE 1:50

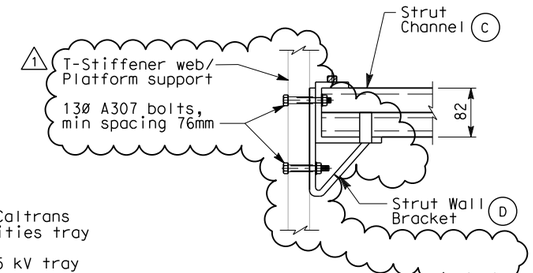

DETAIL 2
(TYPICAL BRACKET TRAY SUPPORT)
SCALE 1:5

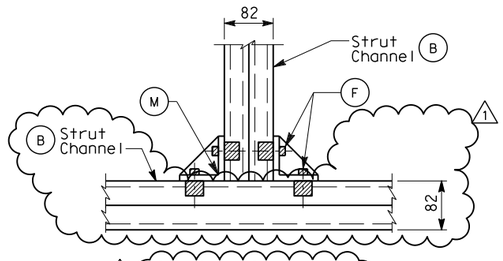

SECTION X-X
(TYPICAL BRACKET SUPPORT)
SCALE 1:5

SECTION B-B
SCALE 1:50

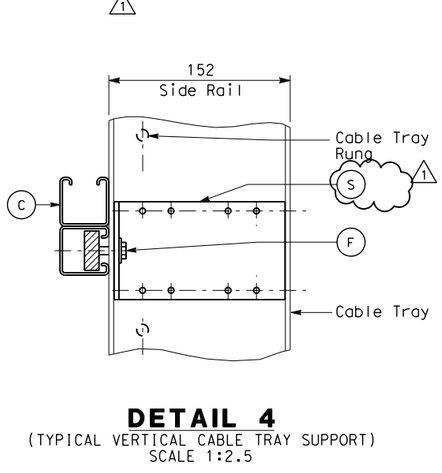

DETAIL 4
(TYPICAL VERTICAL CABLE TRAY SUPPORT)
SCALE 1:2.5

SHEET NOTES:

1. For seismic bracing, use strut channel installed diagonally to connect horizontal member of one hanger to horizontal member of adjacent hanger. See Sections A-A and B-B for connecting points.
2. For seismic bracing, use strut channel installed diagonally ~~to connect~~ horizontal member of tray support to adjacent support.

NOTES:

1. Materials, hardware and fittings shall be galvanized or stainless steel. For additional requirements, see Electrical Special Provisions.
2. References:
   - For plans and sections, see sheets E-186A and E-221A.

MATERIAL LIST

Item No.	Description	Remarks
A	Strut channel, 41 mm x 41 mm	Length as required
B	Strut channel, 41 mm x 82 mm	Length as required
C	Strut channel combination, 41 mm x 82 mm	Length as required
D	Strut wall bracket	
E	Threaded steel hanger rod, 12 mm diameter	Length as required
F	Strut channel spring nut, lockwasher and hex bolt	
H	Strut channel hanger trapeze hardware kit	
1 J	DELETED	
K	Strut channel brace fittings for horizontal seismic support	Length as required
M	Strut channel wing shape fitting	
1 R	DELETED	
S	Vertical tray hanger with splice plate hardware (Bolted to side rail)	

REQUEST FOR INFORMATION NOT ADDRESSED IN THIS CCO REMAIN IN FORCE					
MARK	DATE	DESCRIPTIONS	BY	CH'D	CCO#
1	03/27/13	ADDITIONAL SAS MISCELLANEOUS ELECTRICAL CHANGES	RR RSB	RG	191S2
REVISIONS					

CONTRACT CHANGE ORDER NO._____
SHEET _____ OF _____

REGISTERED PROFESSIONAL ENGINEER — DAVID H. OTO — No. 10699 — Exp. 06/30/2013 ELECTRICAL — STATE OF CALIFORNIA

1 FOR REVISION ONLY

DETAILS
SAS SUPERSTRUCTURE AND SKYWAY STRUCTURE GIRDER INTERFACE EASTBOUND HINGE AE TRAY SUPPORTS
SCALE AS NOTED

E-221B

DIST	COUNTY	ROUTE	KILOMETER POST TOTAL PROJECT	SHEET No	TOTAL SHEETS
04	SF	80	13.2/13.9	242 R1	1204

Jens Erlingsson — REGISTERED ELECTRICAL ENGINEER — 2/6/04 DATE

12-6-04 PLANS APPROVAL DATE

REGISTERED PROFESSIONAL ENGINEER — JENS ERLINGSSON — No. 8249 — Exp. 9/30/06 ELECTRICAL — STATE OF CALIFORNIA

PB POWER, Inc.
A Parsons Brinckerhoff Company
303 Second St., Suite 700N
San Francisco, CA 94107-1317

The State of California or its officers or agents shall not be responsible for the accuracy or completeness of electronic copies of this plan sheet.

Caltrans now has a web site! To get to the web site, go to http://www.dot.ca.gov

DESIGN OVERSIGHT	CALCULATED/ DESIGNED BY	CHECKED BY	DATE	REVISED BY	DATE REVISED
BEHZAD GOLEMOHAMMADI	EJL	CYF	12/03	EJL	1/04
				EJL	2/04

STATE OF CALIFORNIA - DEPARTMENT OF TRANSPORTATION — Caltrans

LAST REVISION 03-27-13 — DATE PLOTTED => 3/29/2013 TIME PLOTTED => 10:38:15 AM

FOR REDUCED PLANS ORIGINAL SCALE IS IN MILLIMETERS 0 20 40 60 80

DGN FILE =>04-0120f1_0242R01.dgn
USERNAME =>Melsheimer

CU 04251 EA 0120F1

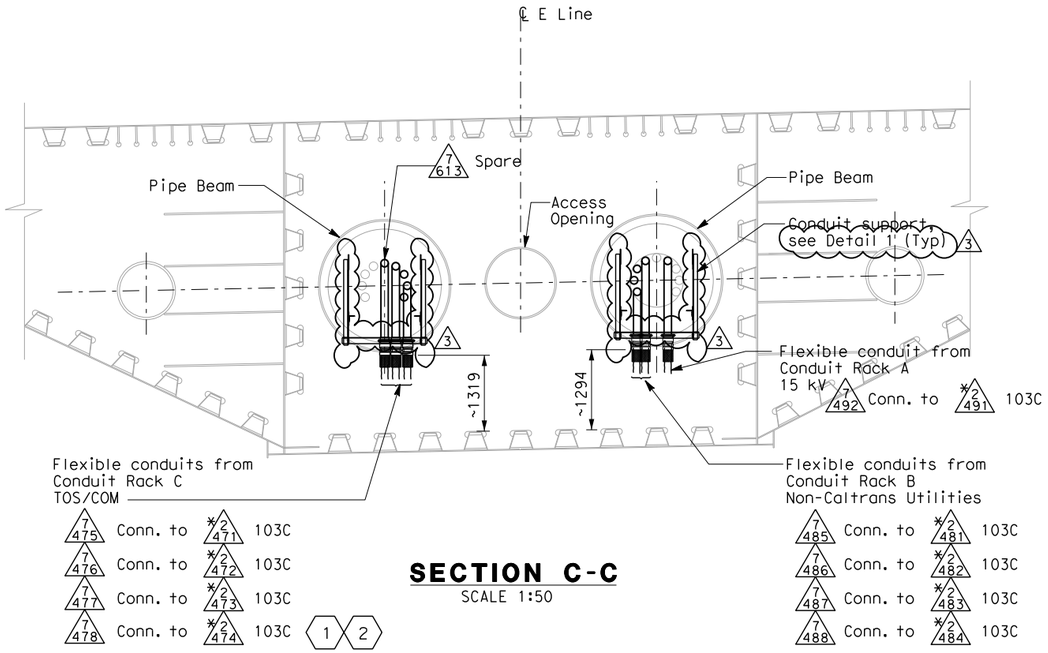

SECTION C-C
SCALE 1:50

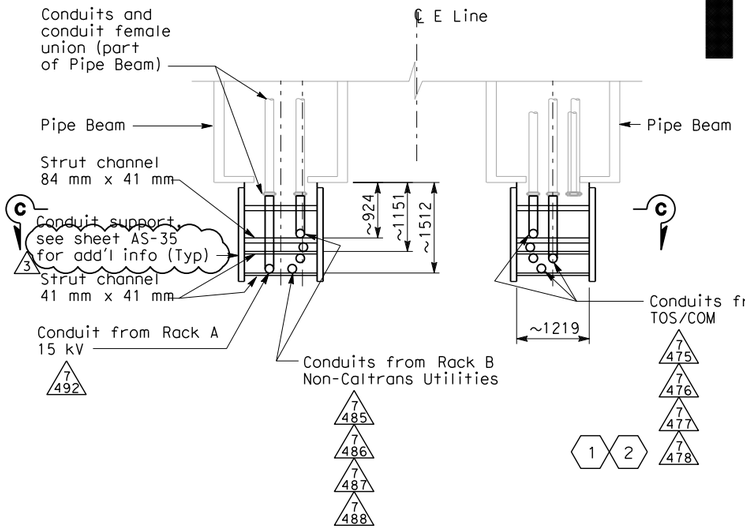

PLAN - DETAIL 1
SCALE 1:50

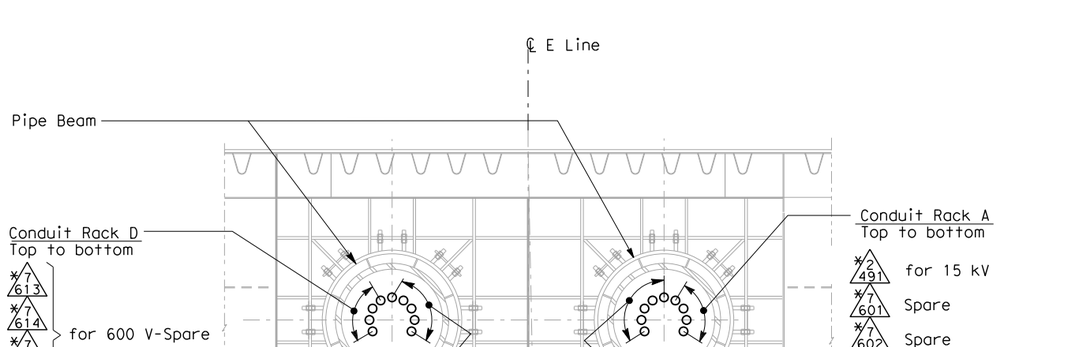

SECTION D-D
SCALE 1:50
Information of conduit arrangement only
(Conduits are part of Pipe Beams)

NOTES:

1. Materials, hardware and fittings shall be galvanized or stainless steel. For additional requirements, see Electrical Special Provisions.
2. References:
   - For Westbound plans and sections, see sheets E-186A and E-221A.
3. Existing conduits (*) inside pipe beam are supplied in Skyway contract.

SHEET NOTES:

1. Furnish and install 4-25.4 mm innerducts inside TOS/COM conduits (*2474, 7478) and 1-25.4 mm innerduct per BASE fiber optic cable in TOS/COM cable tray.
2. Furnish and install BASE fiber optic cable in innerduct inside TOS/COM conduit and cable tray. See sheet E-1101.

DIST	COUNTY	ROUTE	KILOMETER POST TOTAL PROJECT	SHEET No	TOTAL SHEETS
04	SF	80	13.2/13.9	243 R3	1204

Jens Erlingsson 2/6/04
REGISTERED ELECTRICAL ENGINEER DATE

12-6-04
PLANS APPROVAL DATE

REGISTERED PROFESSIONAL ENGINEER — JENS ERLINGSSON No. 8249 Exp. 9/30/06 ELECTRICAL — STATE OF CALIFORNIA

PB POWER, Inc.
A Parsons Brinckerhoff Company
303 Second St., Suite 700N
San Francisco, CA 94107-1317

The State of California or its officers or agents shall not be responsible for the accuracy or completeness of electronic copies of this plan sheet.

Caltrans now has a web site! To get to the web site, go to http://www.dot.ca.gov

REGISTERED PROFESSIONAL ENGINEER — DAVID H. OTO No. 10699 Exp. 06/30/2013 ELECTRICAL — STATE OF CALIFORNIA
FOR REVISION ONLY 3

REGISTERED PROFESSIONAL ENGINEER — SYN YEE CHIN No. 18186 Exp. 09/30/2011 ELECTRICAL — STATE OF CALIFORNIA
FOR REVISION ONLY 2

REGISTERED PROFESSIONAL ENGINEER — S. A. ESTOQUE, JR. No. E-10151 Exp. 12/31/2008 ELECTRICAL — STATE OF CALIFORNIA
FOR REVISION ONLY 1

REQUEST FOR INFORMATION NOT ADDRESSED IN THIS CCO REMAIN IN FORCE

MARK	DATE	DESCRIPTIONS	BY	CH'D	CCO#
		REVISIONS			
3	03/27/13	ADDITIONAL SAS MISCELLANEOUS ELECTRICAL CHANGES	RR RSB	RG	191S2
2	03/01/11	BASE INTEGRATION	RSB	WB	150
1	02/25/08	CABLE TRAY CHANGES	JD	RG SE	42S1

CONTRACT CHANGE ORDER NO._____
SHEET _____ OF _____

DETAILS
SAS SUPERSTRUCTURE AND SKYWAY STRUCTURE GIRDER INTERFACE EASTBOUND HINGE AE SUPPORTS
SCALE AS NOTED

E-221C

	CALCULATED/ DESIGNED BY	CHECKED BY
DATE	CYF	EJL
REVISED BY	EJL	
DATE REVISED	12/03	1/04
		2/04

DESIGN OVERSIGHT — BEHZAD GOLEMOHAMMADI

STATE OF CALIFORNIA - DEPARTMENT OF TRANSPORTATION — Caltrans

THIS PLAN ACCURATE FOR ELECTRICAL WORK ONLY.

ALL DIMENSIONS ARE IN MILLIMETERS UNLESS OTHERWISE SHOWN

FOR REDUCED PLANS ORIGINAL SCALE IS IN MILLIMETERS 0 20 40 60 80

DGN FILE =>04-0120f1_0243R03.dgn
USERNAME =>Melsheimer

CU 04251

EA 0120F1

LAST REVISION 03-27-13
DATE PLOTTED => 3/29/2013
TIME PLOTTED => 10:38:32 AM

DIST	COUNTY	ROUTE	KILOMETER POST TOTAL PROJECT	SHEET No	TOTAL SHEETS
04	SF	80	13.2/13.9	86 S37	1204

REGISTERED CIVIL ENGINEER 3/27/13

PLANS APPROVAL DATE

REGISTERED PROFESSIONAL ENGINEER SAIFUDDIN A. MOHAMMED No. 71894 CIVIL STATE OF CALIFORNIA

The State of California or its officers or agents shall not be responsible for the accuracy or completeness of electronic copies of this plan sheet.

Parsons Brinckerhoff Quade & Douglas, Inc.
303 Second Street, Suite 700N
San Francisco, CA 94107

Caltrans now has a web site! To get to the web site, go to: http://www.dot.ca.gov

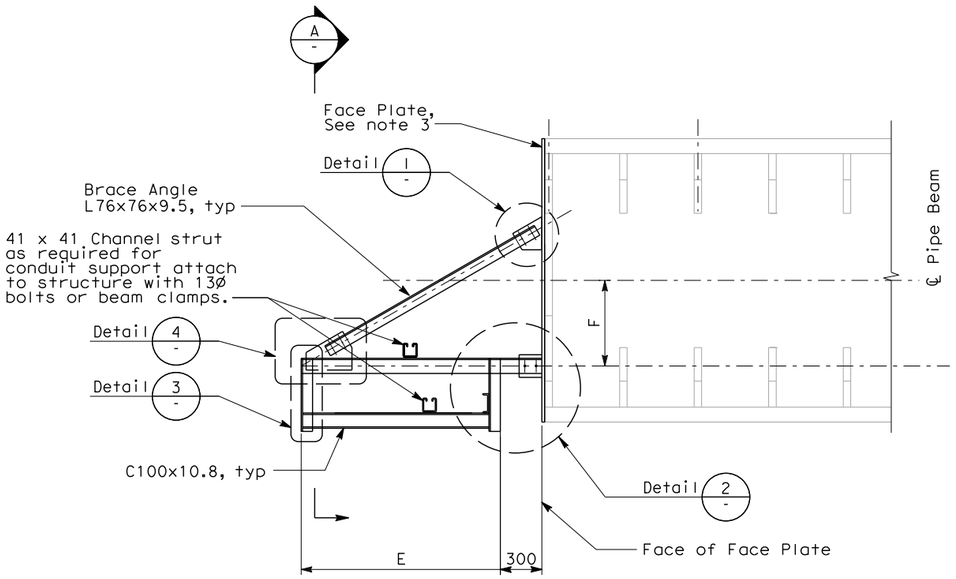

CONDUIT SUPPORT AT PIPE BEAM

SEE TABLE FOR DIMENSIONS
SCALE: NO SCALE

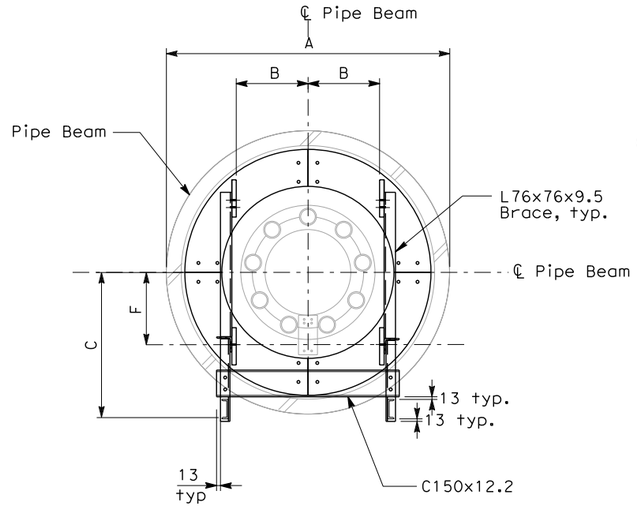

SECTION A-A

NO SCALE

TABLE CONDUIT SUPPORT DIMENSIONS

	Hinge A
A	1900
B	600
C	991
D	420
E	1335
F	574

NOTES:

1. For General Structural Notes, see AS-1.
2. For other details not shown, see electrical plans.
3. See sheet AS-35A for face plate.

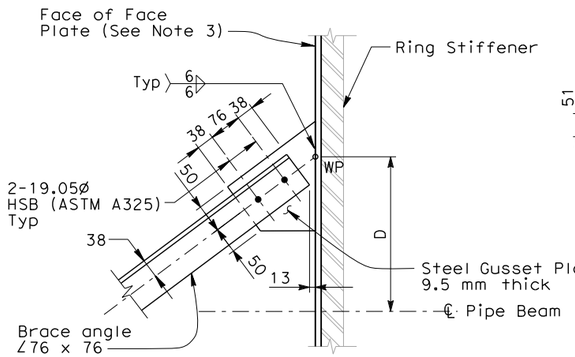

1 DETAIL

SEE TABLE FOR DIMENSIONS
NO SCALE

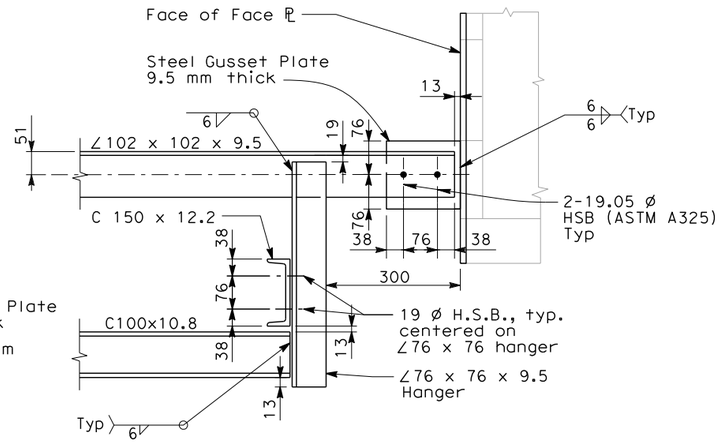

2 DETAIL

NO SCALE

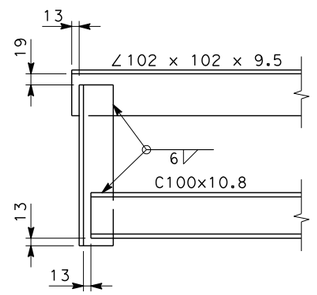

3 DETAIL

NO SCALE

(Brace not shown for clarity)

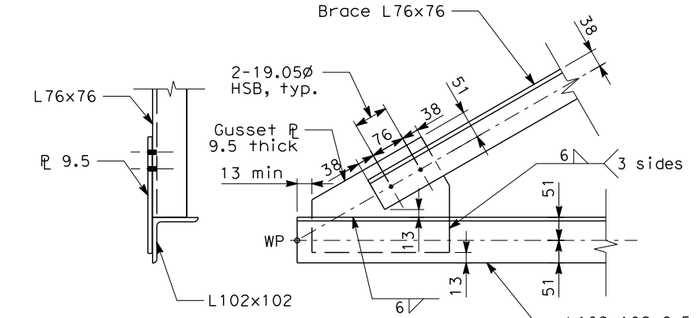

4 DETAIL

NO SCALE

(Hanger L76x76 not shown for clarity)

REQUEST FOR INFORMATION NOT ADDRESSED IN THIS CCO REMAIN IN FORCE

MARK	DATE	DESCRIPTIONS	BY	CH'D	CCO#
		REVISIONS			
0	03/27/13	ADDITIONAL SAS MISCELLANEOUS ELECTRICAL CHANGES	SAM	RG	191S2

CONTRACT CHANGE ORDER NO. _____
SHEET _____ OF _____

ALL DIMENSIONS ARE IN MILLIMETERS UNLESS OTHERWISE SHOWN

DESIGN	BY S. Mohammed	CHECKED R. Garcia	PREPARED FOR THE STATE OF CALIFORNIA DEPARTMENT OF TRANSPORTATION
DETAILS	BY E. Llorico	CHECKED R. Garcia	
QUANTITIES	BY	CHECKED	

Brady Nadell
PROJECT ENGINEER

BRIDGE NO.	34-0006
KILOMETER POST	13.2/13.9

SAS/SKYWAY SUPERSTRUCTURE

GIRDER CONDUIT/CABLE TRAY SUPPORT DETAIL - SHEET 1 OF 4

AS-35

DESIGN DETAIL SHEET (METRIC) (REV. 3/1/98)

ORIGINAL SCALE IN MILLIMETERS FOR REDUCED PLANS 0 10 20 30 40 50 60 70 80 90 100

CU 04251
EA 0120F1

DISREGARD PRINTS BEARING EARLIER REVISION DATES →

REVISION DATES (PRELIMINARY STAGE ONLY) | SHEET | OF

FILE => 04-0120f1_086S37.dgn

$FREQUEST

USERNAME => MelSheime@ DATE PLOTTED => 3/29/2013 TIME PLOTTED => 11:31:03 AM

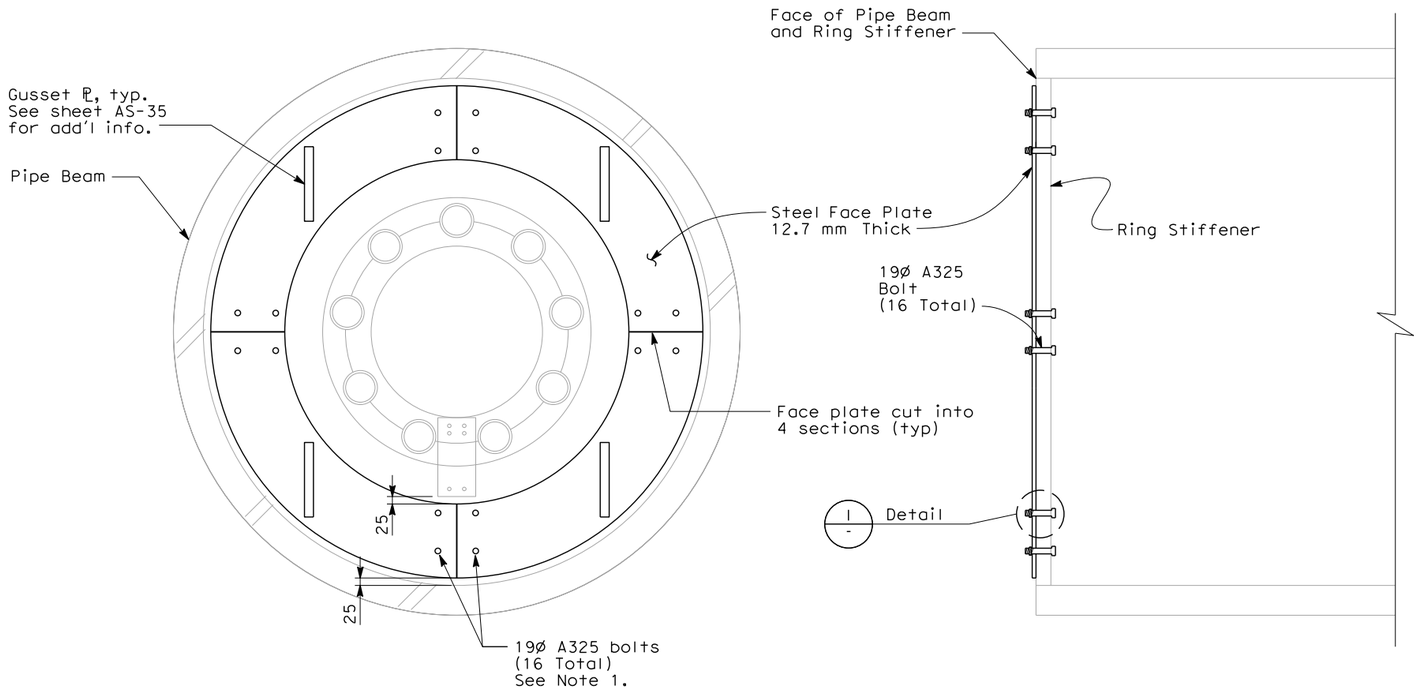

FACE PLATE AT PIPE BEAM

NO SCALE

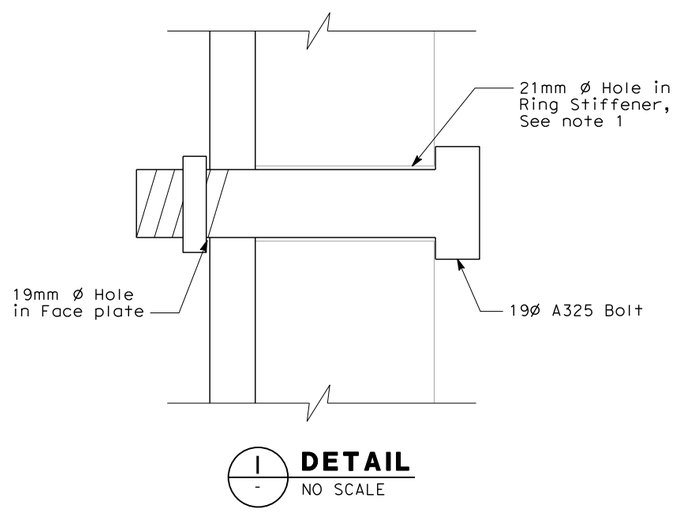

1 DETAIL

NO SCALE

NOTES:

1. Bolt locations in face plate shall match existing bolt pattern in ring stiffener as shown. Verify existing bolt holes sizes in field.
2. Bolts shall be installed with lock washer.
3. All structural steel shall be hot-dipped galvanized.

DIST	COUNTY	ROUTE	KILOMETER POST TOTAL PROJECT	SHEET No	TOTAL SHEETS
04	SF	80	13.2/13.9	86 S38	1204

REGISTERED CIVIL ENGINEER 3/27/13

PLANS APPROVAL DATE

REGISTERED PROFESSIONAL ENGINEER SAIFUDDIN A. MOHAMMED No. 71894 CIVIL STATE OF CALIFORNIA

The State of California or its officers or agents shall not be responsible for the accuracy or completeness of electronic copies of this plan sheet.

Parsons Brinckerhoff Quade & Douglas, Inc.
303 Second Street, Suite 700N
San Francisco, CA 94107

Caltrans now has a web site! To get to the web site, go to: http://www.dot.ca.gov

REQUEST FOR INFORMATION NOT ADDRESSED IN THIS CCO REMAIN IN FORCE

MARK	DATE	DESCRIPTIONS	BY	CH'D	CCO#
0	03/27/13	ADDITIONAL SAS MISCELLANEOUS ELECTRICAL CHANGES	SAM	RG	191S2
		REVISIONS			

CONTRACT CHANGE ORDER NO._____
SHEET _____ OF _____

ALL DIMENSIONS ARE IN MILLIMETERS UNLESS OTHERWISE SHOWN

	BY	CHECKED
DESIGN	S. Mohammed	R. Garcia
DETAILS	E. Llorico	R. Garcia
QUANTITIES		

PREPARED FOR THE STATE OF CALIFORNIA DEPARTMENT OF TRANSPORTATION

Brady Nadell
PROJECT ENGINEER

BRIDGE NO.	SAS/SKYWAY SUPERSTRUCTURE
34-0006	
KILOMETER POST	GIRDER CONDUIT/CABLE TRAY SUPPORT DETAIL - SHEET 2 OF 4
13.2/13.9	AS-35A

DESIGN DETAIL SHEET (METRIC) (REV. 3/1/98)

ORIGINAL SCALE IN MILLIMETERS FOR REDUCED PLANS 0 10 20 30 40 50 60 70 80 90 100

CU 04251
EA 0120F1

DISREGARD PRINTS BEARING EARLIER REVISION DATES →

REVISION DATES (PRELIMINARY STAGE ONLY) | SHEET | OF

FILE => 04-0120f1_086S38.dgn

$FREQUEST

USERNAME => Melsheime@ATE PLOTTED => 3/29/2013 TIME PLOTTED => 10:34:47 AM

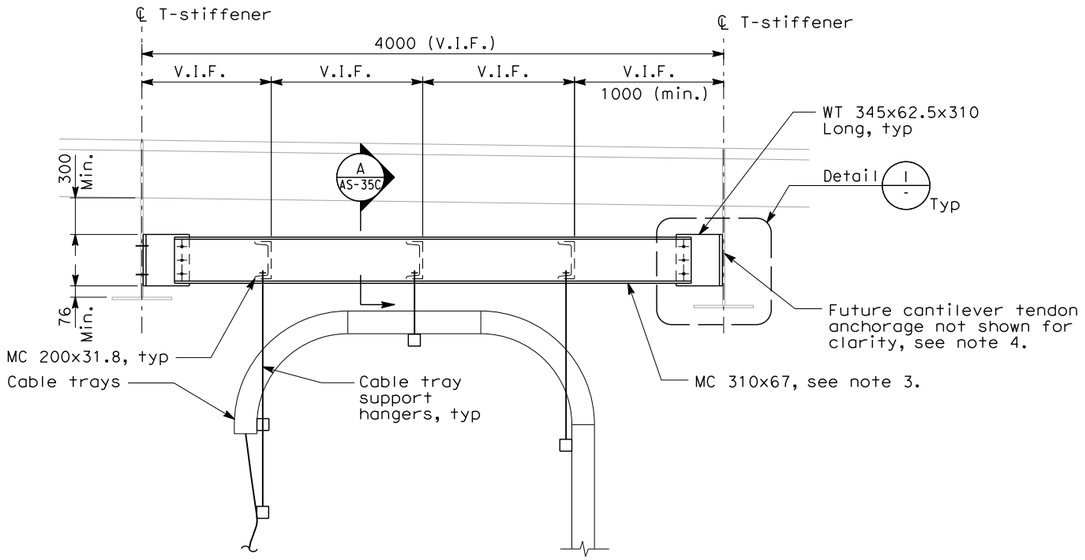

CONDUIT TRAY/CONDUIT SUPPORT AT CEILING

NO SCALE

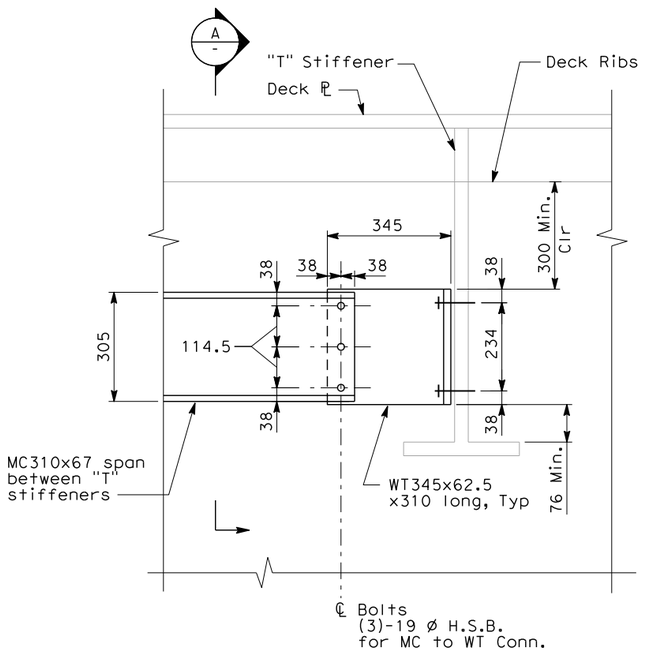

1/- DETAIL

NTS

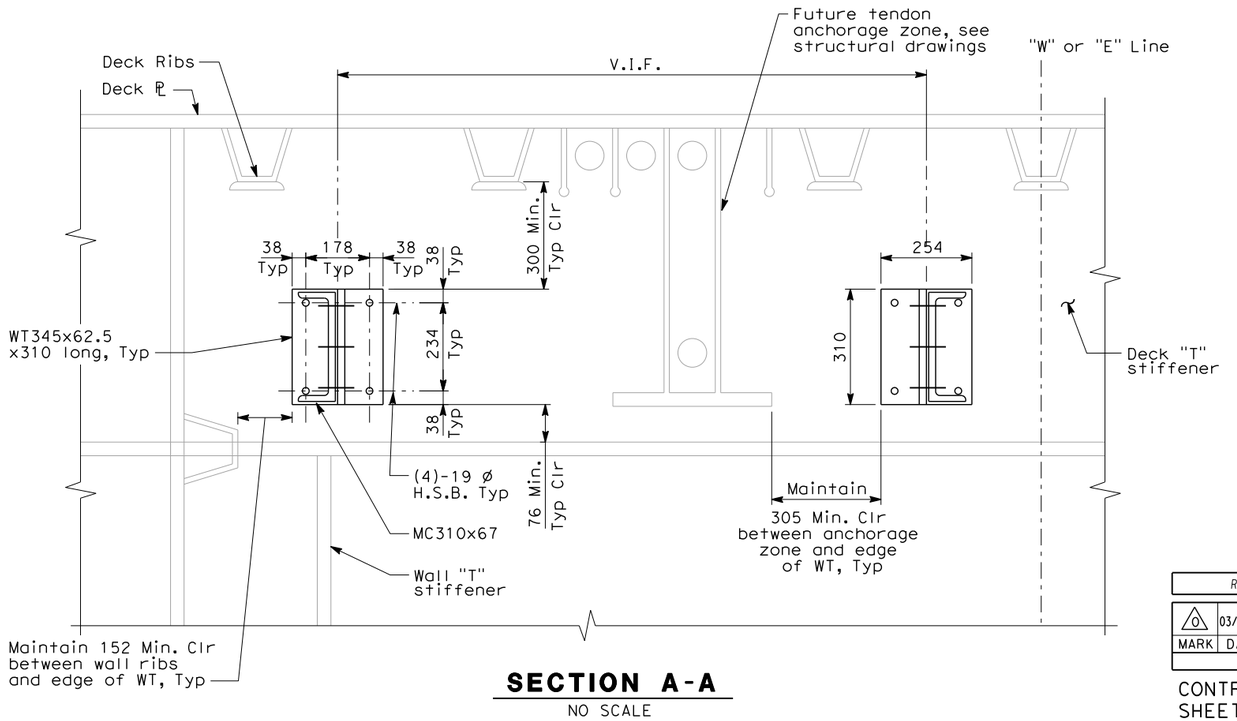

SECTION A-A

NO SCALE

Caltrans Metric

DIST	COUNTY	ROUTE	KILOMETER POST TOTAL PROJECT	SHEET No	TOTAL SHEETS
04	SF	80	13.2/13.9	86 S39	1204

REGISTERED CIVIL ENGINEER 3/27/13

PLANS APPROVAL DATE

REGISTERED PROFESSIONAL ENGINEER SAIFUDDIN A. MOHAMMED No. 71894 CIVIL STATE OF CALIFORNIA

The State of California or its officers or agents shall not be responsible for the accuracy or completeness of electronic copies of this plan sheet.

Parsons Brinckerhoff Quade & Douglas, Inc.
303 Second Street, Suite 700N
San Francisco, CA 94107

Caltrans now has a web site! To get to the web site, go to: http://www.dot.ca.gov

NOTES:

1. For General Structural Notes, see AS-1.
2. For other details not shown, see electrical plans.
3. MC channel shall be installed in true horizontal position.
4. Contractor shall maintain 305 min. clr. in all directions around future tendon anchorage zone.

REQUEST FOR INFORMATION NOT ADDRESSED IN THIS CCO REMAIN IN FORCE

MARK	DATE	DESCRIPTIONS	BY	CH'D	CCO#
		REVISIONS			
0	03/27/13	ADDITIONAL SAS MISCELLANEOUS ELECTRICAL CHANGES	SAM	RG	191S2

CONTRACT CHANGE ORDER NO. _____
SHEET _____ OF _____

ALL DIMENSIONS ARE IN MILLIMETERS UNLESS OTHERWISE SHOWN

	BY	CHECKED
DESIGN	S. Mohammed	R. Garcia
DETAILS	J. Fusco	R. Garcia
QUANTITIES		

PREPARED FOR THE STATE OF CALIFORNIA DEPARTMENT OF TRANSPORTATION

Brady Nadell
PROJECT ENGINEER

BRIDGE NO.	SAS/SKYWAY SUPERSTRUCTURE
34-0006	GIRDER CONDUIT/CABLE TRAY SUPPORT DETAIL - SHEET 3 OF 4
KILOMETER POST 13.2/13.9	AS-35B

DESIGN DETAIL SHEET (METRIC) (REV. 3/1/98)

ORIGINAL SCALE IN MILLIMETERS FOR REDUCED PLANS 0 10 20 30 40 50 60 70 80 90 100

CU 04251
EA 0120F1

DISREGARD PRINTS BEARING EARLIER REVISION DATES →

REVISION DATES (PRELIMINARY STAGE ONLY)

SHEET OF

FILE => 04-0120f1_086S39.dgn

$FREQUEST

USERNAME => Meisheme@ATE PLOTTED => 3/29/2013 TIME PLOTTED => 10:35:04 AM

Caltrans Metric

DIST	COUNTY	ROUTE	KILOMETER POST TOTAL PROJECT	SHEET No	TOTAL SHEETS
04	SF	80	13.2/13.9	86 S40	1204

REGISTERED CIVIL ENGINEER 3/27/13

PLANS APPROVAL DATE

REGISTERED PROFESSIONAL ENGINEER — SAIFUDDIN A. MOHAMMED — No. 71894 — CIVIL — STATE OF CALIFORNIA

The State of California or its officers or agents shall not be responsible for the accuracy or completeness of electronic copies of this plan sheet.

Parsons Brinckerhoff Quade & Douglas, Inc.
303 Second Street, Suite 700N
San Francisco, CA 94107

Caltrans now has a web site! To get to the web site, go to: http://www.dot.ca.gov

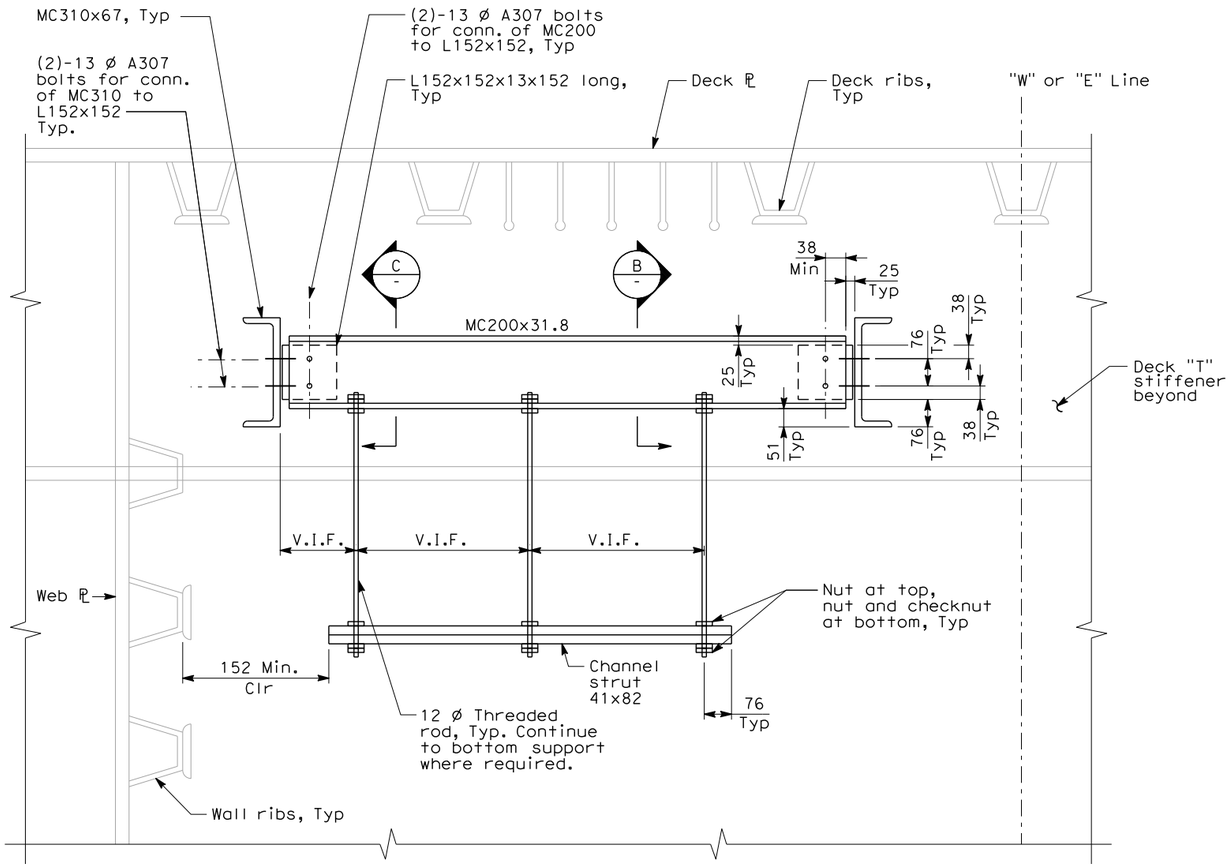

SECTION A-A
NO SCALE

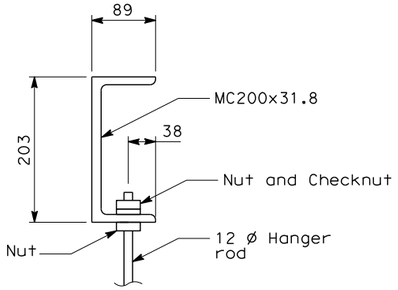

SECTION B-B
NO SCALE

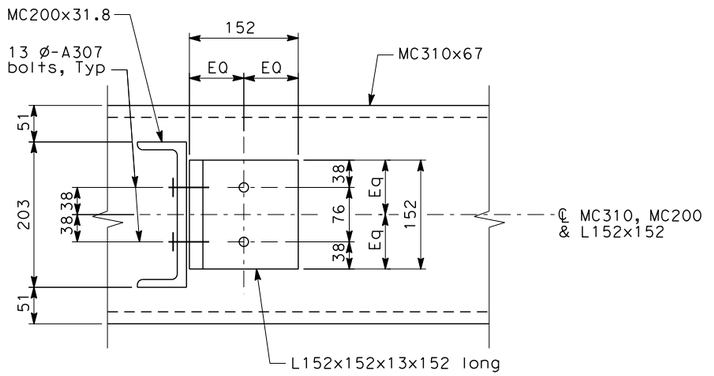

SECTION C-C
NO SCALE

NOTES:

1. See Electrical Plans for additional information
2. Cable trays/conduits not shown for clarity.
3. Seismic horizontal bracing not shown for clarity. See Electrical Plans.
4. Verify all dimensions in field.

REQUEST FOR INFORMATION NOT ADDRESSED IN THIS CCO REMAIN IN FORCE

MARK	DATE	DESCRIPTIONS / REVISIONS	BY	CH'D	CCO#
0	03/27/13	ADDITIONAL SAS MISCELLANEOUS ELECTRICAL CHANGES	SAM	RG	191S2

CONTRACT CHANGE ORDER NO._____
SHEET _____ OF _____

ALL DIMENSIONS ARE IN MILLIMETERS UNLESS OTHERWISE SHOWN

	BY	CHECKED
DESIGN	S. Mohammed	R. Garcia
DETAILS	J. Fusco	R. Garcia
QUANTITIES		

PREPARED FOR THE STATE OF CALIFORNIA DEPARTMENT OF TRANSPORTATION

Brady Nadell
PROJECT ENGINEER

CU 04251
EA 0120F1

BRIDGE NO. 34-0006
KILOMETER POST 13.2/13.9

SAS/SKYWAY SUPERSTRUCTURE
GIRDER CONDUIT/CABLE TRAY SUPPORT DETAIL - SHEET 4 OF 4

AS-35C

DISREGARD PRINTS BEARING EARLIER REVISION DATES →

REVISION DATES (PRELIMINARY STAGE ONLY)

SHEET OF

DESIGN DETAIL SHEET (METRIC) (REV. 3/1/98)

ORIGINAL SCALE IN MILLIMETERS FOR REDUCED PLANS 0 10 20 30 40 50 60 70 80 90 100

FILE => 04-0120f1_086S40.dgn

$FREQUEST

USERNAME => Melshehime@DATE PLOTTED => 3/29/2013 TIME PLOTTED => 11:31:52 AM

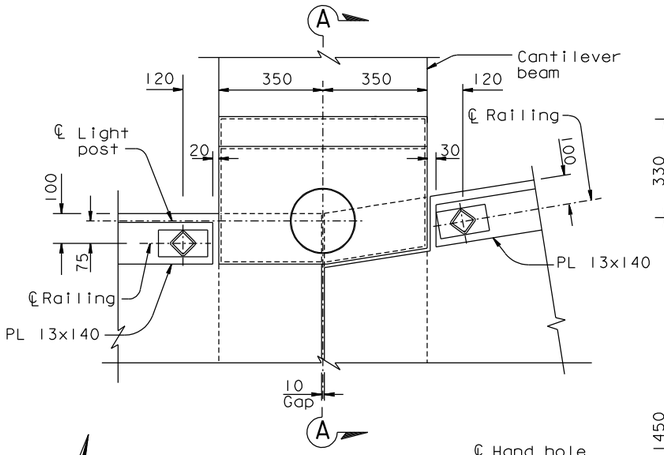

DETAIL A
1:10

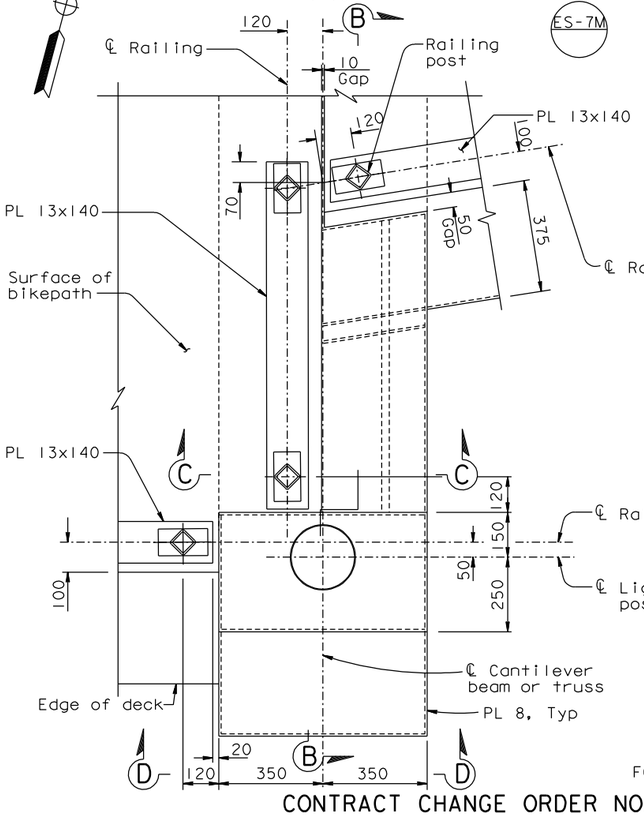

DETAIL B
1:10

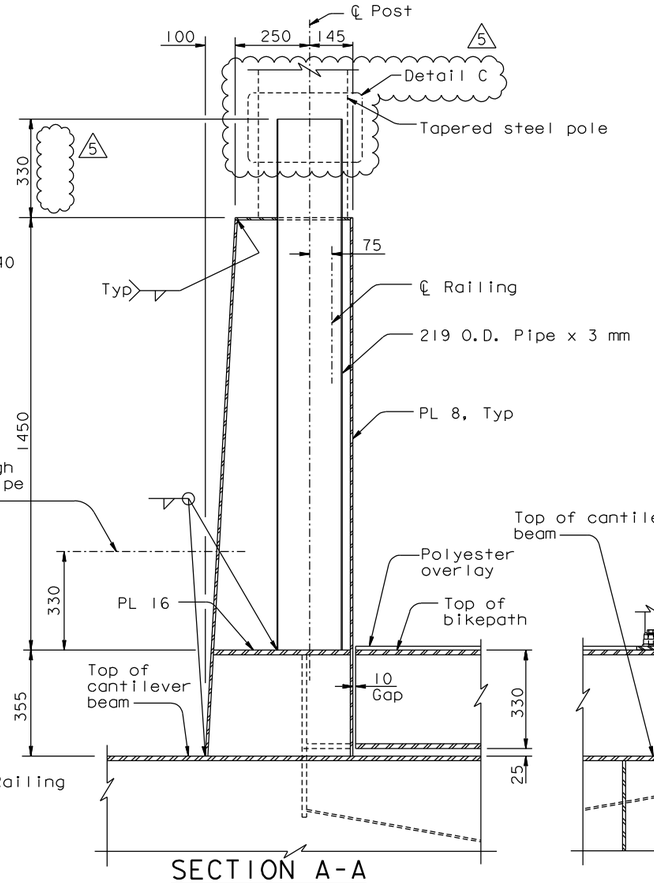

SECTION A-A
1:10

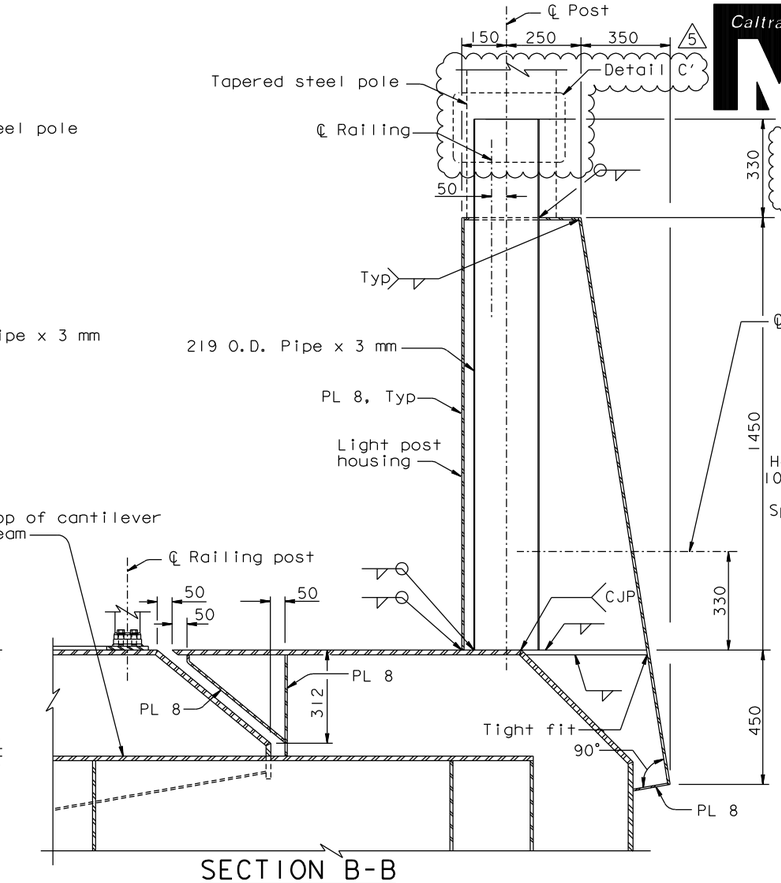

SECTION B-B
1:10

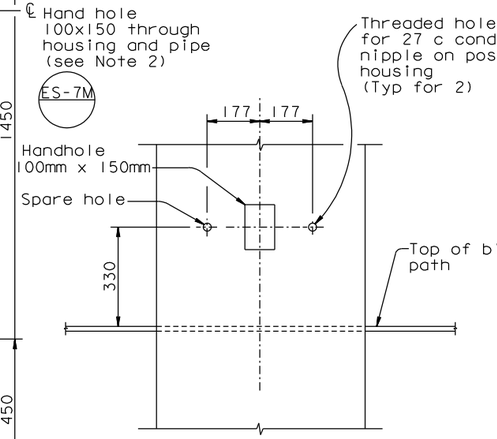

SECTION D-D
1:10

LIGHT POST HOUSING DETAILS AT BELVEDERES

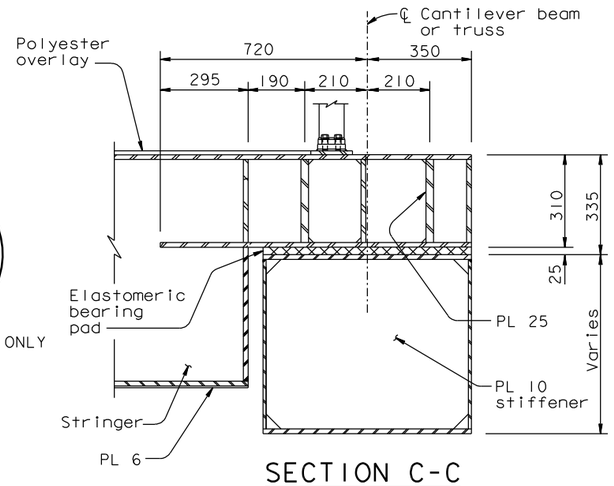

SECTION C-C
1:10

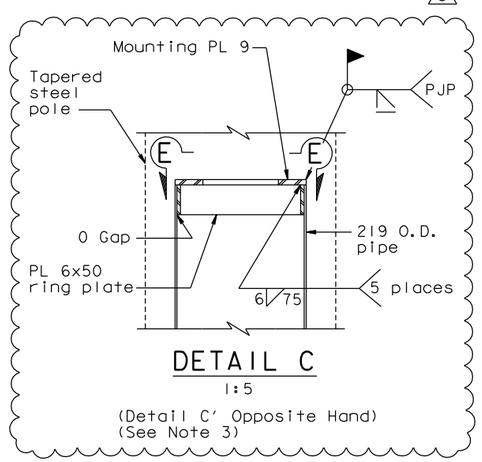

DETAIL C
1:5

(Detail C' Opposite Hand)
(See Note 3)

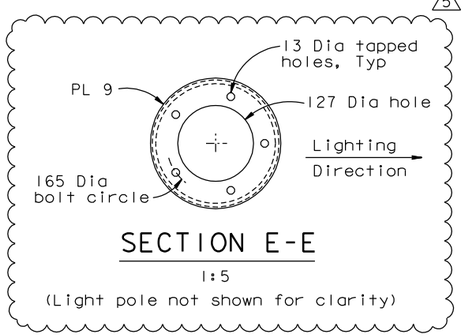

SECTION E-E
1:5

(Light pole not shown for clarity)

NOTES:

1. For tapered steel pole slip joint details, see "Road Plans".
2. Hand hole cover for exterior opening only. Cover shall be a "Tamper Resistant Handhole Cover" per Caltrans Standard ES-7M.
3. Mounting plate and ring plate shall be ASTM A36 steel.

FOR REVISION 5 ONLY

CONTRACT CHANGE ORDER NO. ____
SHEET ___ OF ___

REQUESTS FOR INFORMATION NOT ADDRESSED IN THIS CCO REMAIN IN FORCE

MARK	DATE	DESCRIPTIONS	BY	CH'D	CCO#
5	03/08/13	ADDITIONAL MISCELLANEOUS ELECTRICAL	DT	MN	191S2
4	04/01/11	BIKEPATH CONDUIT	TH	JD	73
3	08/20/10	BIKEPATH DETAILS	CC	TH	99
2	05/28/10	BIKEPATH CONDUIT	AB	TH	73
1	09/25/09	BIKEPATH DETAILS	TH	HT	99

REVISIONS

ALL DIMENSIONS ARE IN MILLIMETERS UNLESS OTHERWISE SHOWN

DIST.	COUNTY	ROUTE	KILOMETER POST TOTAL PROJECT	SHEET NO.	TOTAL SHEETS
04	SF	80	13.2/13.9	901R5	1204

REGISTERED ENGINEER - CIVIL
Tien Hung Ho, No. C 43990, Exp. 6/30/13, CIVIL, REGISTERED PROFESSIONAL ENGINEER, STATE OF CALIFORNIA
12-6-04
PLANS APPROVAL DATE

The State of California or its officers or agents shall not be responsible for the accuracy or completeness of electronic copies of this plan sheet.

T.Y. LIN / MOFFATT & NICHOL
825 BATTERY STREET
SAN FRANCISCO, CA 94111

Caltrans now has a web site! To get to the web site, go to: http://www.dot.ca.gov

Marwan N. Nader, No. C 054426, Exp. 12/31/13, CIVIL, REGISTERED PROFESSIONAL ENGINEER, STATE OF CALIFORNIA

R. Valizadeh/V. Toan/Y.L./W.L./F.C.
DESIGN OVERSIGHT
STGN OFF DATE 03/08/13

	BY	CHECKED
DESIGN	T. Ho	C. Redfield
DETAILS	R. Xu	C. Redfield
QUANTITIES	G. Baker	K. Cormier

PREPARED FOR THE STATE OF CALIFORNIA DEPARTMENT OF TRANSPORTATION

R. Manzanarez
PROJECT ENGINEER

BRIDGE NO. 34-0006L/R
KILOMETER POST 13.2/13.9

SAN FRANCISCO OAKLAND BAY BRIDGE
EAST SPAN SEISMIC SAFETY PROJECT
SELF-ANCHORED SUSPENSION BRIDGE
(SUPERSTRUCTURE & TOWER)

RAILING DETAILS NO. 4

Rev. Date: 5-18-98

ORIGINAL SCALE IN MILLIMETERS FOR REDUCED PLANS 0 10 20 30 40 50 60 70 80 90 100

CU 04
EA 0120F1

DISREGARD PRINTS BEARING EARLIER REVISION DATES

REVISION DATES (PRELIMINARY STAGE ONLY): 05/15/99 08/02/99 05/31/01 04/08/02 07/01/02 12/19/02

SHEET 484R5 OF

FILE => I:\bb\04-012001\sas\contract plans and cco\cco\cco#191s2\1-original 03-08-13\dgn\akrlg07.dgn

USERNAME => DWinrow DATE PLOTTED => 08 MAR 2013 TIME PLOTTED => 09:05:43

100 % PS&E