DIST	COUNTY	ROUTE	KILOMETER POST TOTAL PROJECT	SHEET No	TOTAL SHEETS
04	SF	80	13.2/13.9	86 S37	1204

REGISTERED CIVIL ENGINEER 3/27/13

PLANS APPROVAL DATE

REGISTERED PROFESSIONAL ENGINEER SAFIUDDIN A. MOHAMMED No. 71894 CIVIL STATE OF CALIFORNIA

The State of California or its officers or agents shall not be responsible for the accuracy or completeness of electronic copies of this plan sheet.

Parsons Brinckerhoff Quade & Douglas, Inc.
303 Second Street, Suite 700N
San Francisco, CA 94107

Caltrans now has a web site! To get to the web site, go to: http://www.dot.ca.gov

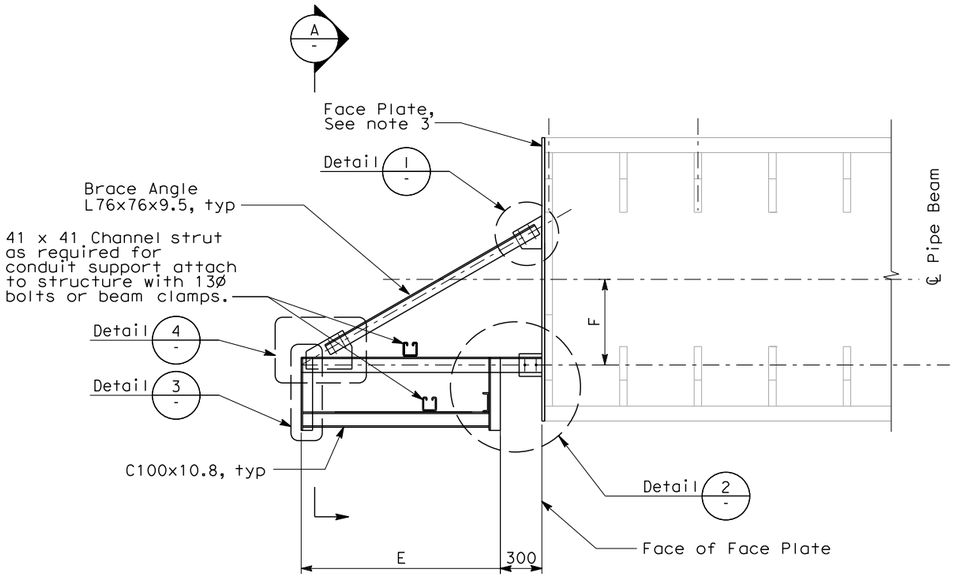

CONDUIT SUPPORT AT PIPE BEAM

SEE TABLE FOR DIMENSIONS
SCALE: NO SCALE

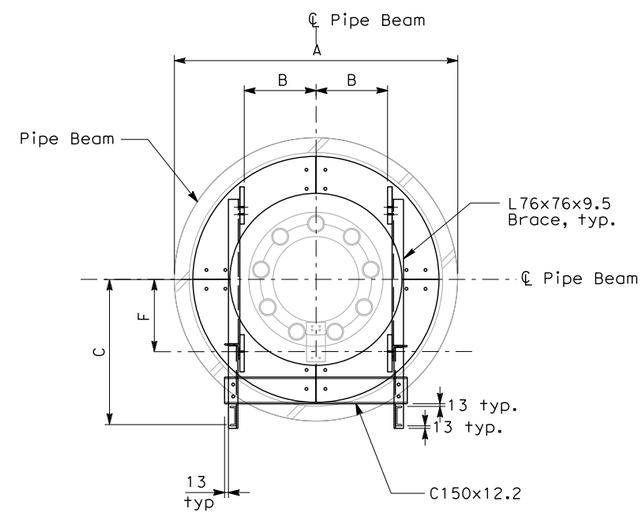

SECTION A-A

NO SCALE

TABLE CONDUIT SUPPORT DIMENSIONS

	Hinge A
A	1900
B	600
C	991
D	420
E	1335
F	574

NOTES:

1. For General Structural Notes, see AS-1.
2. For other details not shown, see electrical plans.
3. See sheet AS-35A for face plate.

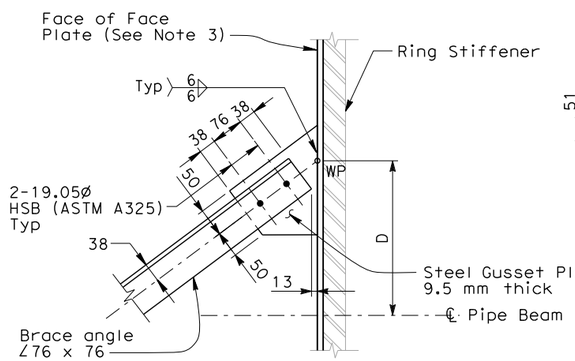

1 DETAIL

SEE TABLE FOR DIMENSIONS
NO SCALE

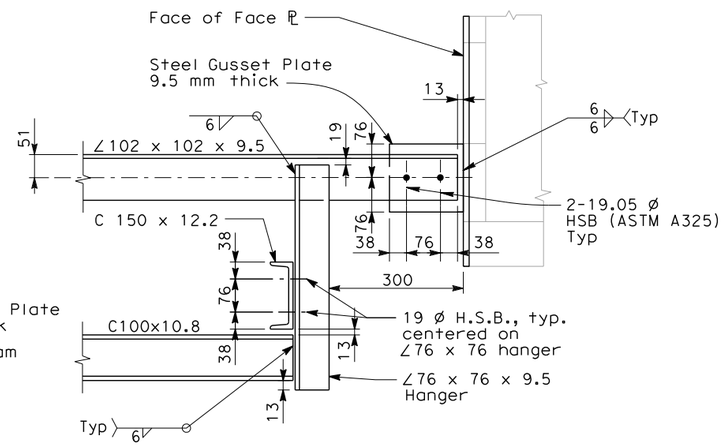

2 DETAIL

NO SCALE

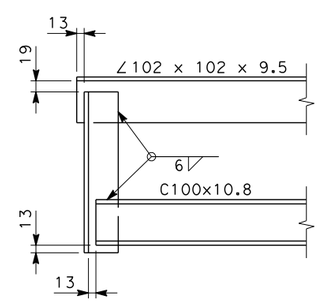

3 DETAIL

NO SCALE

(Brace not shown for clarity)

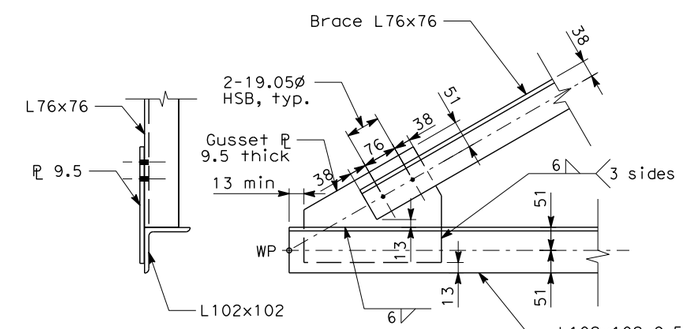

4 DETAIL

NO SCALE

(Hanger L76x76 not shown for clarity)

REQUEST FOR INFORMATION NOT ADDRESSED IN THIS CCO REMAIN IN FORCE

MARK	DATE	DESCRIPTIONS	BY	CH'D	CCO#
0	03/27/13	ADDITIONAL SAS MISCELLANEOUS ELECTRICAL CHANGES	SAM	RG	191S2

REVISIONS

CONTRACT CHANGE ORDER NO. _____
SHEET _____ OF _____

ALL DIMENSIONS ARE IN MILLIMETERS UNLESS OTHERWISE SHOWN

	BY	CHECKED
DESIGN	S. Mohammed	R. Garcia
DETAILS	E. Llorico	R. Garcia
QUANTITIES		

PREPARED FOR THE STATE OF CALIFORNIA DEPARTMENT OF TRANSPORTATION

Brady Nadell
PROJECT ENGINEER

BRIDGE NO. 34-0006
KILOMETER POST 13.2/13.9

SAS/SKYWAY SUPERSTRUCTURE

GIRDER CONDUIT/CABLE TRAY SUPPORT DETAIL - SHEET 1 OF 4

AS-35

DISREGARD PRINTS BEARING EARLIER REVISION DATES

REVISION DATES (PRELIMINARY STAGE ONLY) SHEET OF

CU 04251
EA 0120F1

DESIGN DETAIL SHEET (METRIC) (REV. 3/1/98)

ORIGINAL SCALE IN MILLIMETERS FOR REDUCED PLANS 0 10 20 30 40 50 60 70 80 90 100

FILE => 04-0120f1_086S37.dgn

$FREQUEST

USERNAME => Melsheime@ATE PLOTTED => 3/29/2013 TIME PLOTTED => 11:31:03 AM