DIST	COUNTY	ROUTE	KILOMETER POST TOTAL PROJECT	SHEET NO.	TOTAL SHEETS
04	SF	80	13.2/13.9	214R2	1204

REGISTERED ENGINEER-CIVIL

12-6-04
PLANS APPROVAL DATE

REGISTERED PROFESSIONAL ENGINEER T. W. SPARKS No. E16039 Exp. 9-30-13 ELECTRICAL STATE OF CALIFORNIA

The State of California or its officers or agents shall not be responsible for the accuracy or completeness of electronic copies of this plan sheet.

T.Y. LIN / MOFFATT & NICHOL
825 BATTERY STREET
SAN FRANCISCO, CA 94111

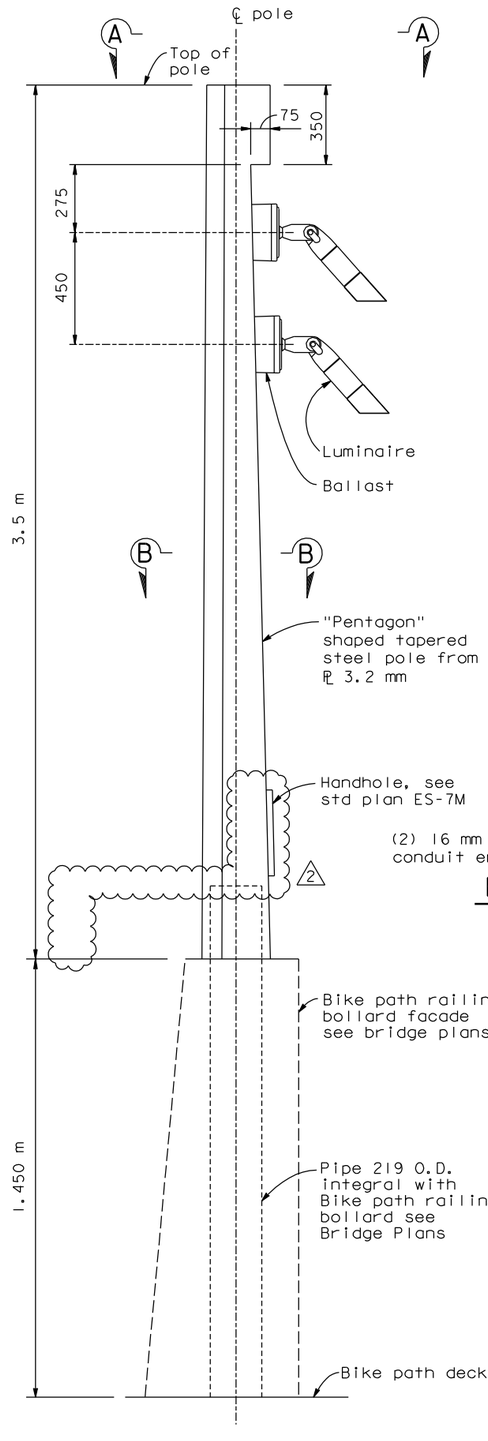

ELEVATION
POLE DETAIL
Not to scale

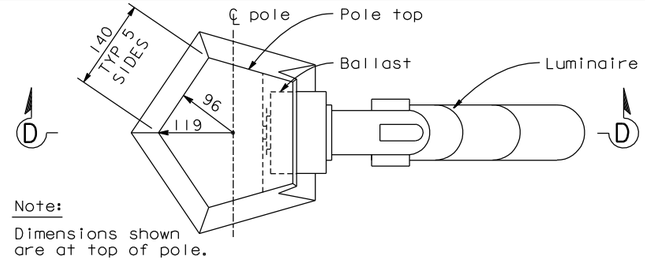

Note:
Dimensions shown are at top of pole.

SECTION A-A
Not to scale

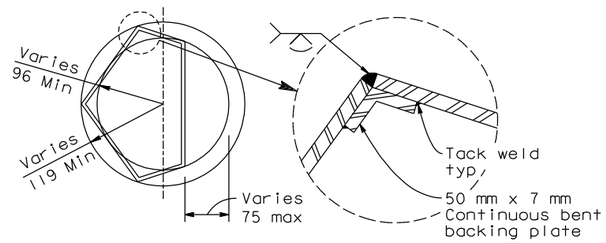

SECTION B-B
Not to scale

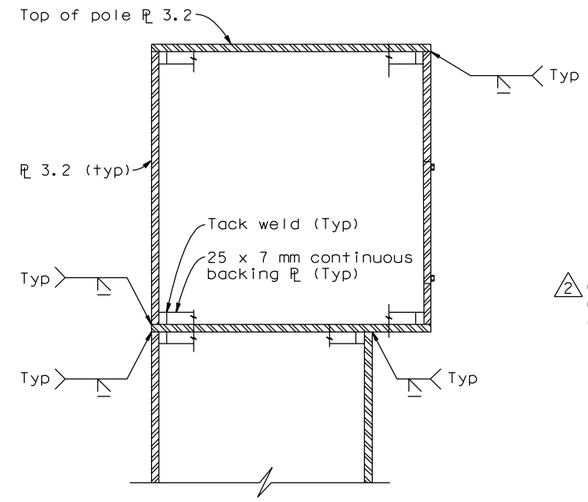

DETAIL AT TOP OF POLE
Not to scale

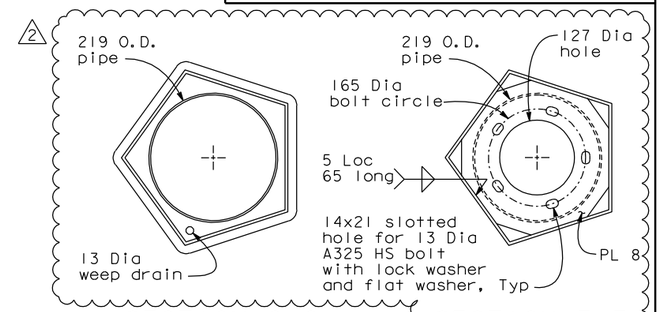

SECTION C-C
1:5

SECTION E-E
1:5

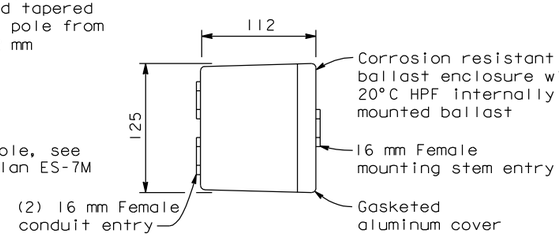

BALLAST - TOP VIEW
Not to scale

Pole notes:

1. Wind Loading: 190 km/h velocity (at bridge deck) AASHTO
2. All welding continuous unless otherwise noted on the plans. All welding to be done in accordance with the standard specifications.
3. Pole details shall be submitted to the engineer for approval.
4. For pole finish see special provisions.
5. For additional notes see std plan ES-7M.

Luminaire fixture notes:

1. Finish: Double chromate conversion undercoating with thermoplastic polyester powder coat finish.
2. Hardware: Stainless steel corrosion resistant.
3. U.L. Listed wet location.
4. Beam spread: 30°
5. Lamp: 35 watt, par 20 metal halide

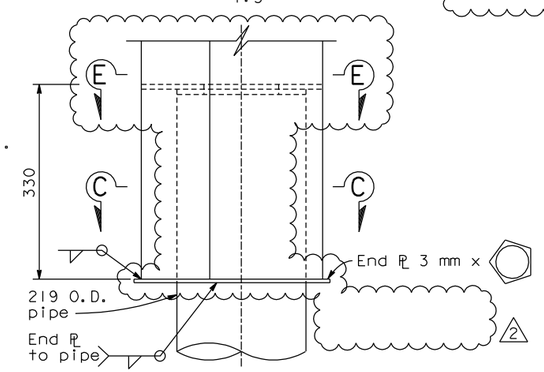

SLIP JOINT DETAIL
(Verify fit with Bike path railing bollard fabricator)
1:5

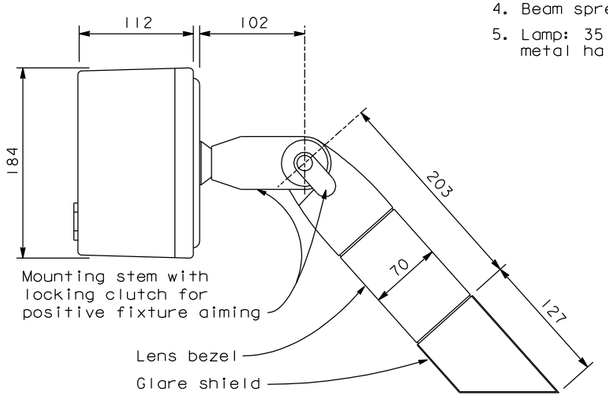

FIXTURE DETAIL
Not to scale

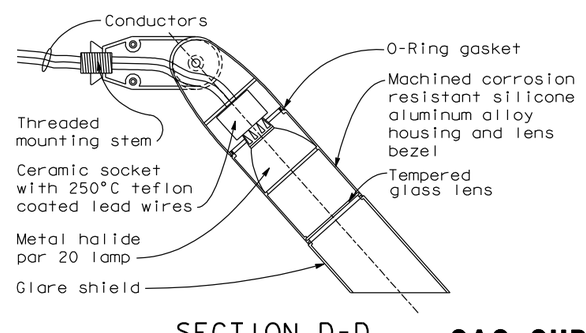

SECTION D-D
Not to scale

* * * POLES WILL BE STATE FURNISHED * * *
DETAILS ARE SHOWN IN CONTRACT NO. BATA 007

CONTRACT CHANGE ORDER NO. _____
SHEET ____ OF ____

REQUESTS FOR INFORMATION NOT ADDRESSED IN THIS CCO REMAIN IN FORCE

MARK	DATE	DESCRIPTIONS	BY	CH'D	CCO#
2	03/08/13	ADDITIONAL MISCELLANEOUS ELECTRICAL	JB	TS	191S2
1	04/22/11	STATE FURNISHED LIGHT POLES	JB	TS	43S1

REVISIONS

DETAILS
SAS SUPERSTRUCTURE ROADWAY EASTBOUND
TYPICAL BELVEDERE LIGHTING
SCALE AS NOTED

ALL DIMENSIONS ARE IN MILLIMETERS UNLESS OTHERWISE SHOWN.

E-173

REVISED BY	DATE	DATE REVISED

CALCULATED/DESIGNED BY GAM DATE 10/00
CHECKED BY TYL 10/00

DESIGN OVERSIGHT BOB ZANDIPOUR

SAS STRUCTURE
STATE OF CALIFORNIA - DEPARTMENT OF TRANSPORTATION
Caltrans

LAST REVISION 04-19-00
DATE PLOTTED => 08 MAR 2013
TIME PLOTTED => 09:02:40

FOR REDUCED PLANS ORIGINAL SCALE IN MILLIMETERS 0 20 40 60 80
FILE => I:\bb\04-012001\sas\contract plans and cco\cco\cco#191s2\-original 03-08-13\dgn\40120fua173.dgn
USERNAME => DWinrow
CU 04251 EA 012001