| DIST | COUNTY | ROUTE | KILOMETER POST TOTAL PROJECT | SHEET No | TOTAL SHEETS |
|---|---|---|---|---|---|
| 04 | SF | 80 | 13.2/13.9 | 86 S41 | 1204 |

REGISTERED CIVIL ENGINEER 10/09/13

PLANS APPROVAL DATE

REGISTERED PROFESSIONAL ENGINEER SAFIUDDIN A. MOHAMMED No. 71894 CIVIL STATE OF CALIFORNIA

*The State of California or its officers or agents shall not be responsible for the accuracy or completeness of electronic copies of this plan sheet.*

Parsons Brinckerhoff Quade & Douglas, Inc.
303 Second Street, Suite 700N
San Francisco, CA 94107

*Caltrans now has a web site! To get to the web site, go to: http://www.dot.ca.gov*

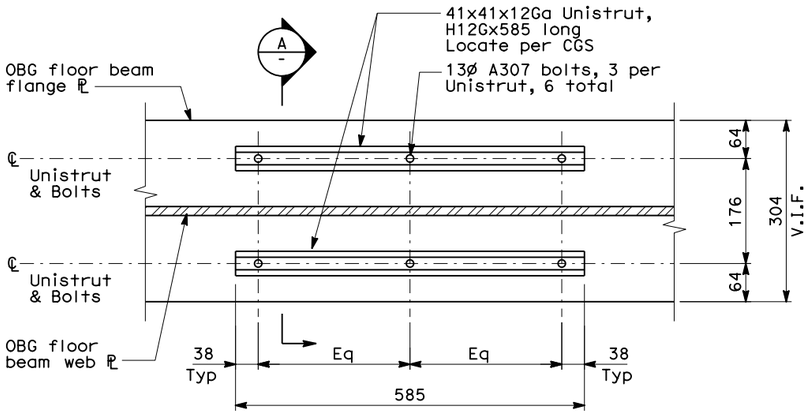


## STRONG MOTION SENSOR ENCLOSURE INSIDE OBG @ PP 127.5

SCALE: 1:10

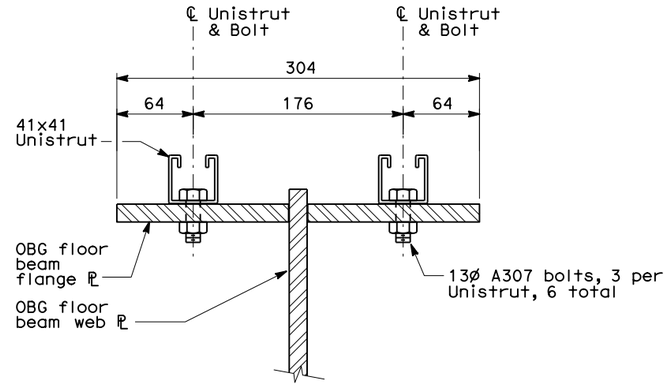


## A SECTION

SCALE: 1:5

NOTES:

1. Contractor shall ensure all embedded anchors are aligned along a straight vertical line. Embedded anchors shall not conflict with Saddle Assembly, PT ducts pr concrete jacket wall reinforcement.
2. All embedded anchors and channel struts shall be hot-dipped galvanized.
3. Connection at concrete jacket wall is shown, connection at soffit beam is similar.
4. Pull box shall be attached to horizontal channel struts using strut channel spring nut, lockwasher and hex bolt.

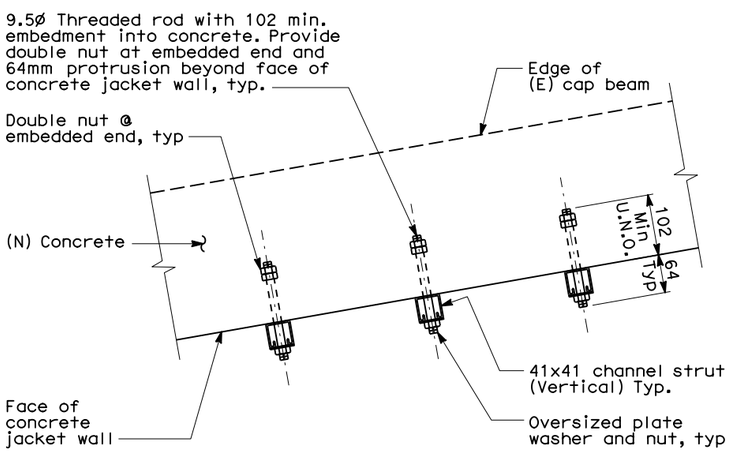


## EMBEDDED ANCHOR AND VERTICAL CONDUIT SUPPORT CHANNEL STRUT CONNECTION DETAIL

SCALE: 1:10

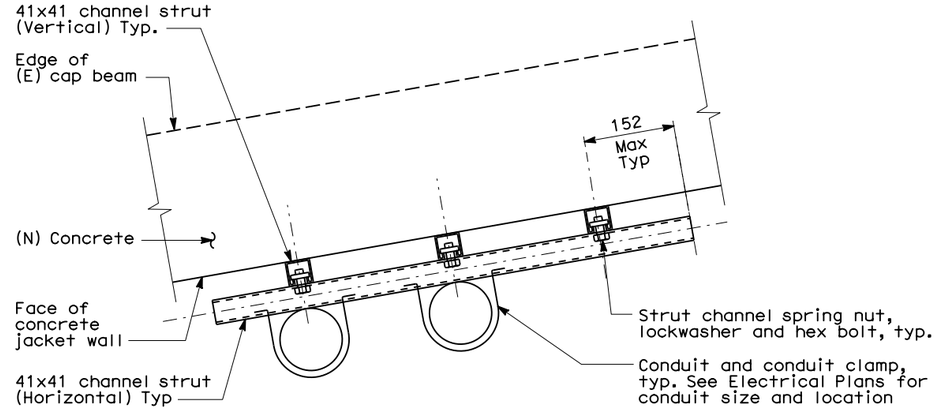


## HORIZONTAL CONDUIT SUPPORT CHANNEL STRUT AND CONDUIT ATTACHMENT DETAIL

SCALE: 1:10

*REQUEST FOR INFORMATION NOT ADDRESSED IN THIS CCO REMAIN IN FORCE*

| MARK | DATE | DESCRIPTIONS | BY | CH'D | CCO# |
|---|---|---|---|---|---|
| 0 | 10/28/13 | ADDITIONAL SAS MISCELLANEOUS ELECTRICAL CHANGES | SAM | JZ | 191S2 |

REVISIONS

CONTRACT CHANGE ORDER NO._____
SHEET _____ OF _____

ALL DIMENSIONS ARE IN MILLIMETERS UNLESS OTHERWISE SHOWN

| | BY | CHECKED |
|---|---|---|
| DESIGN | S. Mohammed | J. Zandian |
| DETAILS | E. Llorico | J. Zandian |
| QUANTITIES | | |

PREPARED FOR THE STATE OF CALIFORNIA DEPARTMENT OF TRANSPORTATION

Brady Nadell
PROJECT ENGINEER

BRIDGE NO. 34-0006
KILOMETER POST 13.2/13.9

# SAS/SKYWAY SUPERSTRUCTURE

## GIRDER CONDUIT/CABLE TRAY SUPPORT DETAIL - SHEET 5 OF 5

AS-35D

DESIGN DETAIL SHEET (METRIC) (REV. 3/1/98)

ORIGINAL SCALE IN MILLIMETERS FOR REDUCED PLANS 0 10 20 30 40 50 60 70 80 90 100

CU 04251
EA 0120F1

DISREGARD PRINTS BEARING EARLIER REVISION DATES

REVISION DATES (PRELIMINARY STAGE ONLY) SHEET OF

FILE => 04-0120f1_086S41.dgn

T:\13103\MS\pse\SAS Struc\CCO\SAS CC019152\2013.10.28_Draft 3 Submittal\04-0120f1_086S41.dgn

USERNAME => LLorico DATE PLOTTED => 28-OCT-2013 TIME PLOTTED => 17:43