REQUEST FOR INFORMATION (RFI)

RFI No.: ABF-RFI-003244R00 **Submitted By:** OSullivan, Bill **Pages:** 1
Pages Attached: 0

RFI Date: 28-March-2013 **Contact Name:** Lee, Anna **Phone No.** 415-896-6072

Subject: System Ground, West Girder to Tower			
References:			
Sub/Sup: BLI	**Sub RFI #:** RFI-BLI-174		
Response Required by: 10-April-2013		**Response affects critical path activity?** Yes	

Description:

Please issue the alternate detail for conduit support for the system ground on the D face of the NE quadrant of the tower; include the conduit change from 27C to 41C. Thank you.

Contractor Disposition:

This RFI is being submitted for:

The Cost and Time Impact from this RFI is: Not selected

Response: **Agreed Ext. Due Date:**

Pages: 5
Pages Attached: 4

Please refer to attached sketch SK-RFI3244R00-E264F-2 for the recommended conduit and support configuration for the system ground. This revised configuration is provided as an option to allow bolting of the conduit support to the Tower skin plate in lieu of welding that was specified on contract plan sheet 271S5R2. Note that the the system ground is on the D face of the NW quadrant of the tower.

Also attached are sketches SK-RFI3244R00-E97, SK-RFI3244R00-E111A and SK-RFI3244R00-E264F-1 reflecting the change in conduit size from 27C to 41C as requested by the Contractor.

Administrative Action:

Change Order 191S2 will incorporate this change.

Date: 04-April-2013	**Respondent:** Chandrawinata, Martin	**Phone No.:** 510-286-0535

DIST	COUNTY	ROUTE	KILOMETER POST TOTAL PROJECT	SHEET No	TOTAL SHEETS
04	SF	80	13.2/13.9	150 R2	1204

12/19/02
REGISTERED ELECTRICAL ENGINEER DATE

12-6-04
PLANS APPROVAL DATE

REGISTERED PROFESSIONAL ENGINEER JENS ERLINGSSON No. 8249 Exp. 9/30/06 ELECTRICAL STATE OF CALIFORNIA

PB POWER, Inc.
A Parsons Brinckerhoff Company
303 Second St., Suite 700N
San Francisco, CA 94107-1317

The State of California or its officers or agents shall not be responsible for the accuracy or completeness of electronic copies of this plan sheet.

Caltrans now has a web site! To get to the web site, go to http://www.dot.ca.gov

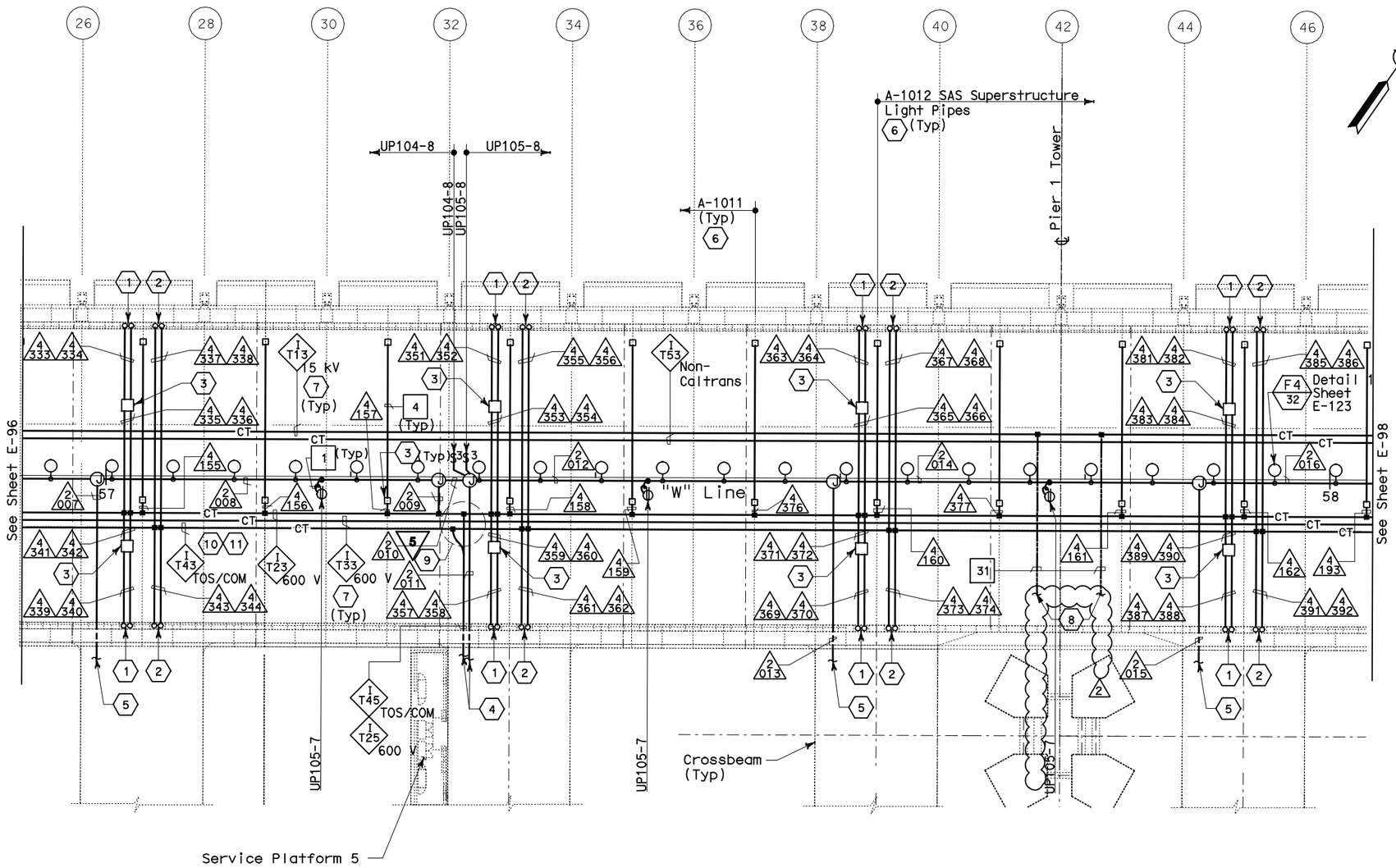

SHEET NOTES:

1. Conduit up to PB-LTG located in barrier, see sheet E-47.
2. Conduit up to PB-COM located in barrier, see sheet E-47.
3. PB-2A locate on top of floor.
4. For cable tray run and lighting inside crossbeam, see sheet E-115.
5. For lighting inside crossbeam, see sheet E-119.
6. PB-2L with circuit for future light pipes. See sheet E-121 for installation details and E-130 for lighting schedule.
7. For cable tray & ground bar support, refer to sheet E-125.
8. 250 kcmil copper grounding conductor exothermically welded ~~to 500 kcmil system grounding conductor.~~ Route 250kcmil BCW in ~~2-370~~ 41C liquidtight flexible metal conduit. For continuation, see sheet E-111A.
9. For fiber splice tray detail, refer to sheet E-355.
10. Furnish and install 1-25.4 mm innerduct per BASE fiber optic cable in TOS/COM cable tray.
11. Furnish and install BASE fiber optic cable in innerduct. See sheet E-1100.

NOTES:

1. References:
   - TOS equipment is shown for conduit routing only. For typical details of TOS controller and devices, see sheets E-344 through E-357.
   - For types of pull boxes, splice boxes and enclosures, see sheet E-83.
   - For bridge grounding plan, see sheet E-111.
   - For circuit and conduit/cable tray schedules, see sheets starting at E-401.
2. For other related work not shown on this sheet, see Electrical Special Provisions.
3. The girder lighting fixtures are shown diagrammatically.Contractor shall install fixtures at railing posts with a maximum of 8000 mm between fixtures. For types and typical lighting fixture installation details, see sheet E-123.
4. The cable trays are shown diagrammatically. For typical girder cable tray plans and sections, see sheets E-124 and E-125.

REGISTERED PROFESSIONAL ENGINEER SYN YEE CHIN No. 18186 Exp. 09/30/2011 ELECTRICAL STATE OF CALIFORNIA

FOR REVISION ONLY 1

REGISTERED PROFESSIONAL ENGINEER DAVID H. OTO No. 10699 Exp. 06/30/2013 ELECTRICAL STATE OF CALIFORNIA

FOR REVISION ONLY 2

THIS PLAN IS ACCURATE FOR ELECTRICAL WORK ONLY.

SAS SUPERSTRUCTURE - CONDUIT AND CABLE TRAY PLAN

REQUEST FOR INFORMATION NOT ADDRESSED IN THIS CCO REMAIN IN FORCE

MARK	DATE	DESCRIPTIONS	BY	CH'D	CCO#
2	04/27/12	ELECTRICAL GROUNDING	RSB RM	RG	75
1	03/01/11	BASE INTEGRATION	RSB	WB	150

REVISIONS

CONTRACT CHANGE ORDER NO._____
SHEET _____ OF _____

SK-RFI3244R00-E97
Adil M. 4/3/13

SAS SUPERSTRUCTURE GIRDER WESTBOUND
LIGHTING AND ELECTRICAL SYSTEMS

SCALE 1:200

ALL DIMENSIONS ARE IN MILLIMETERS UNLESS OTHERWISE SHOWN.

E-97

DRAFT 1 (03/01/11)
STATE OF CALIFORNIA - DEPARTMENT OF TRANSPORTATION
Caltrans

DESIGN OVERSIGHT: BEHZAD GOLEMOHAMMADI

CALCULATED/ DESIGNED BY	FK	DATE 8/02	REVISED BY
CHECKED BY	IAH	8/02	DATE REVISED

FOR REDUCED PLANS ORIGINAL SCALE IS IN MILLIMETERS 0 20 40 60 80

DGN FILE =>04-0120f1_0150R02.dgn
USERNAME =>llorico

CU 04251 EA 0120F1

LAST REVISION 00-00-00
DATE PLOTTED => 25-APR-2012
TIME PLOTTED => 16:58

DIST	COUNTY	ROUTE	KILOMETER POST TOTAL PROJECT	SHEET No	TOTAL SHEETS
04	SF	80	13.2/13.9	165 S1R3	1204

REGISTERED ELECTRICAL ENGINEER 8/11/08 DATE

PLANS APPROVAL DATE

REGISTERED PROFESSIONAL ENGINEER FADI WALIEDDINE No. 11465 Exp. 12/31/2009 ELECTRICAL STATE OF CALIFORNIA

PB AMERICAS, Inc.
A Parsons Brinckerhoff Company
303 Second St., Suite 700N
San Francisco, CA 94107-1317

The State of California or its officers or agents shall not be responsible for the accuracy or completeness of electronic copies of this plan sheet.

Caltrans now has a web site! To get to the web site, go to http://www.dot.ca.gov

Metric

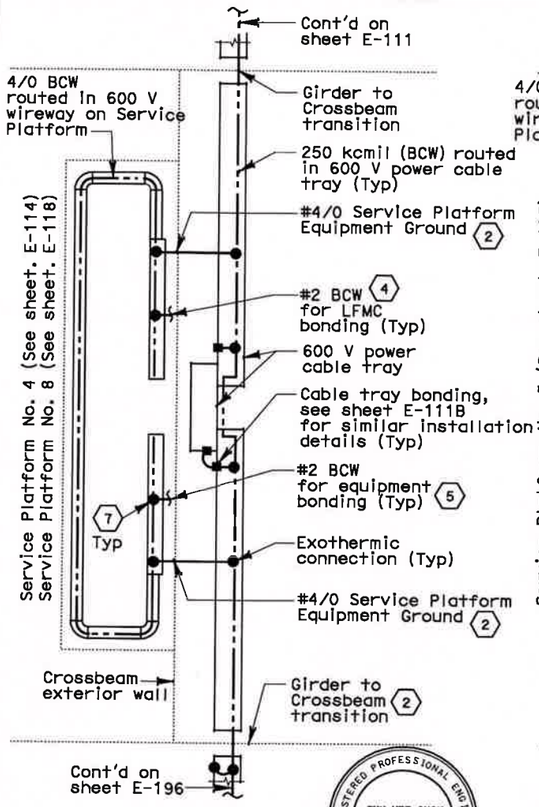

DETAIL 6

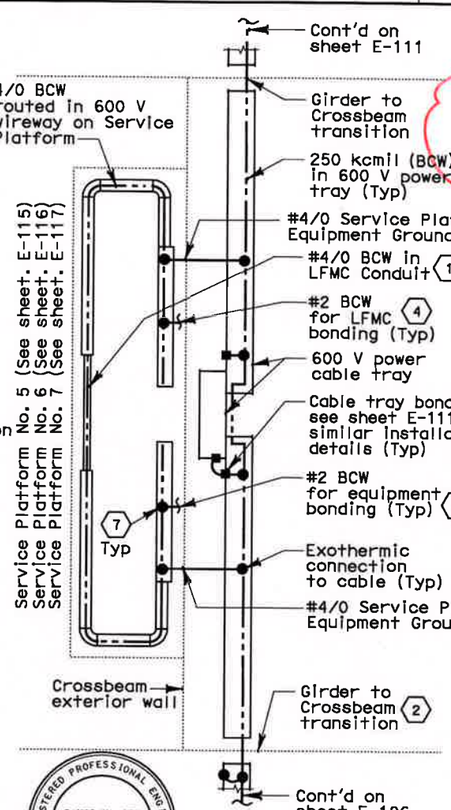

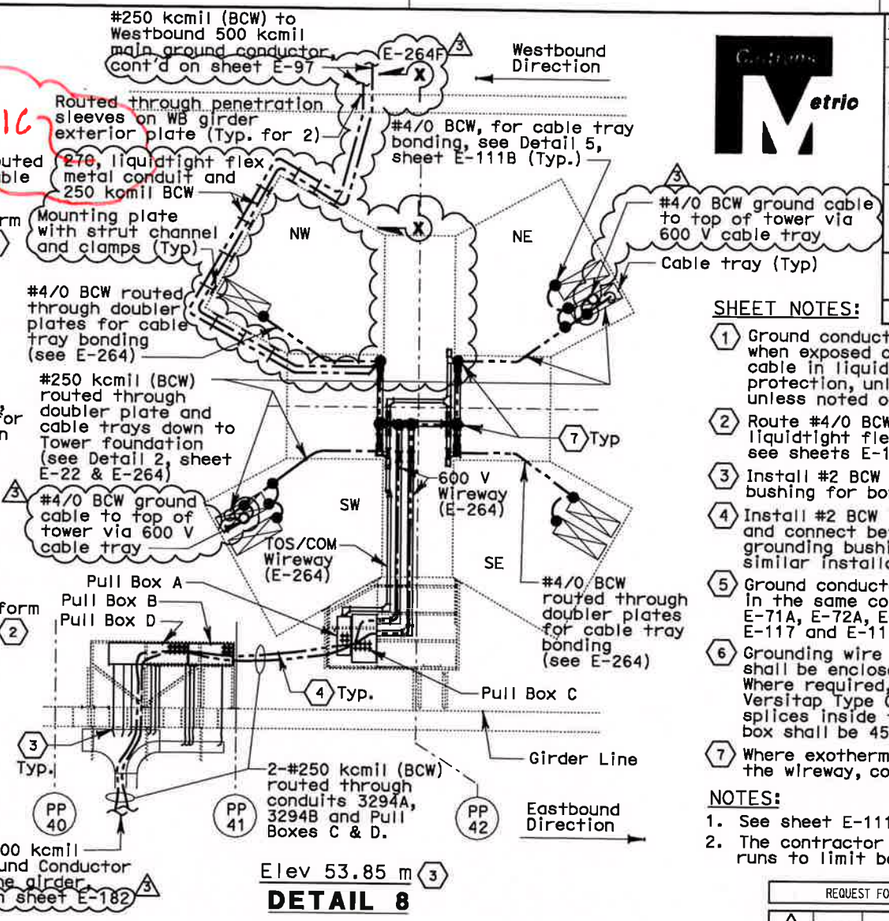

Elev 53.85 m (3)

DETAIL 8

SHEET NOTES:

1. Ground conductor shall be protected from damage when exposed outside the structures. Route ground cable in liquidtight flexible metal conduit (LFMC) for protection, unless routed in cable tray or wireway unless noted otherwise.
2. Route #4/0 BCW through crossbeam exterior wall in liquidtight flexible metal conduit via conduit sleeves, see sheets E-114, E-115, E-116, E-117 and E-118.
3. Install #2 BCW grounding conductors to grounding bushing for bonding conduits to cable tray.
4. Install #2 BCW inside each liquidtight flex metal conduit and connect between the grounding wire and the conduit grounding bushing, see Detail 7 on sheet E-111B for similar installation.
5. Ground conductor for equipment bonding shall be routed in the same conduit connected to equipment, see sheets E-71A, E-72A, E-73A, E-74A, E-75A, E-114, E-115, E-116, E-117 and E-118 for equipment arrangement.
6. Grounding wire splices exposed outside the structures shall be enclosed with NEMA 4X pull box for protection. Where required, mechanical connection using Burndy Versitap Type QPX clamps or equal may be used for splices inside the box in lieu of exothermic weld. Pull box shall be 457 x 305 x 152D or size as required.
7. Where exothermic weld connection is not feasible inside the wireway, compression type connectors may be used.

NOTES:

1. See sheet E-111 for additional notes and sheet notes.
2. The contractor shall install pull box/JB(s) along conduit runs to limit bends to be three (3) 90 degrees or fewer.

REGISTERED PROFESSIONAL ENGINEER SYN YEE CHIN No. 18186 Exp. 09/30/2011 ELECTRICAL STATE OF CALIFORNIA

REGISTERED PROFESSIONAL ENGINEER DAVID H. OTO No. 10699 Exp. 06/30/2013 ELECTRICAL STATE OF CALIFORNIA

Syn Yee Chin FOR REVISION ONLY (1)

David H. Oto FOR REVISION ONLY (2) (3)

REQUEST FOR INFORMATION NOT ADDRESSED IN THIS CCO REMAIN IN FORCE					
3	04/27/12	ELECTRICAL GROUNDING	RSB RM	RG	75
2	12/21/11	ELECTRICAL CHANGE FOR ELEVATION 53 IMPROVEMENTS	TW	RG	190
1	09/02/11	TOWER SUSPENDER CABLE & ELEVATOR	RM	TW	203S1
0	11/20/09	ELECTRICAL GROUNDING	AG RR	RG	75
MARK	DATE	DESCRIPTIONS	BY	CH'D	CCO#
		REVISIONS			

CONTRACT CHANGE ORDER NO. _____
SHEET ____ OF ____

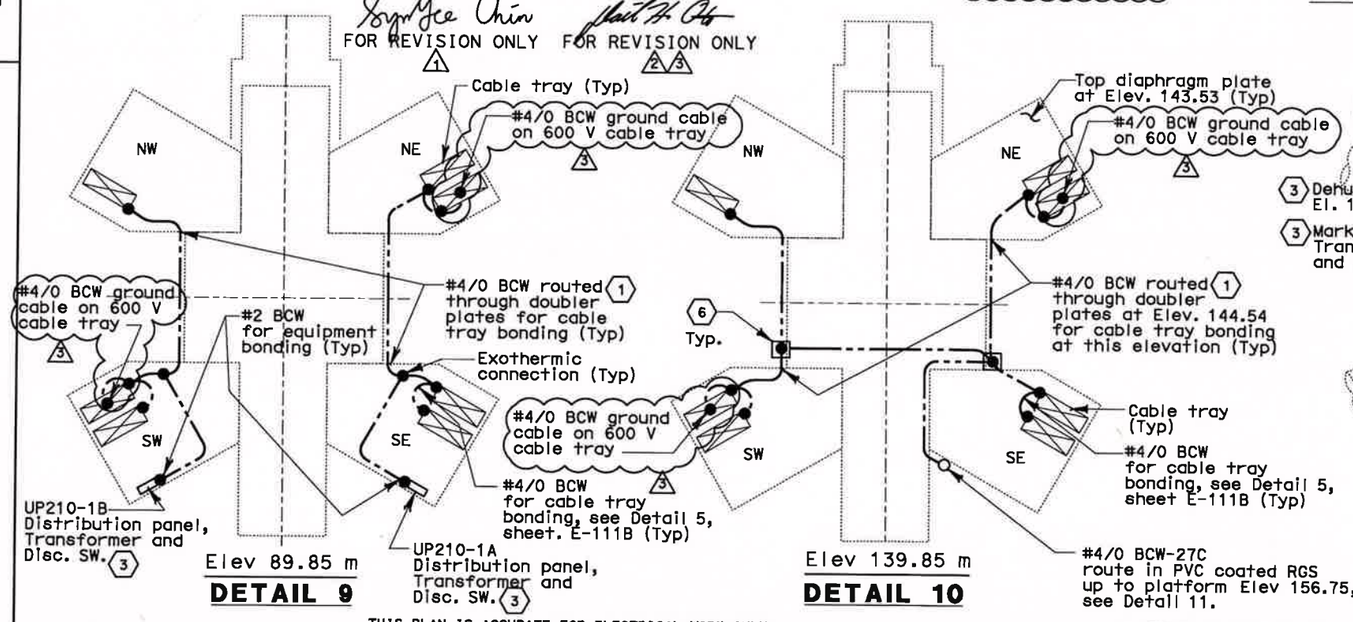

Elev 89.85 m

DETAIL 9

Elev 139.85 m

DETAIL 10

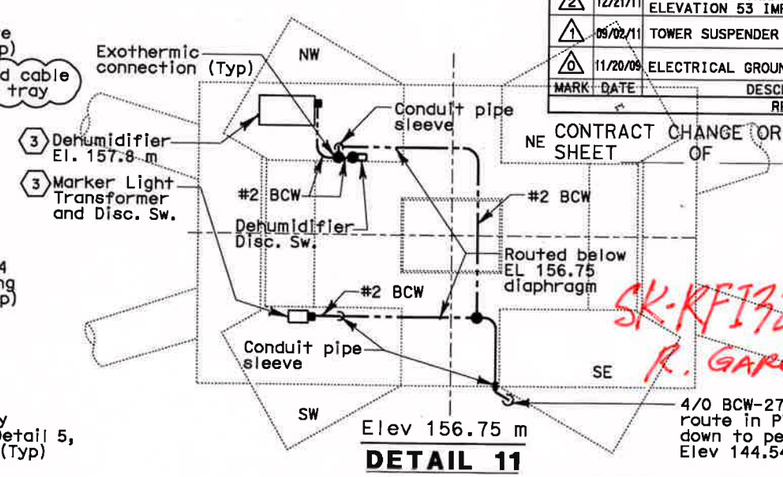

Elev 156.75 m

DETAIL 11

SK-RFI3244R00-E111A
R. GARCIA 4/3/13

DETAILS
SAS SUPERSTRUCTURE GIRDER WESTBOUND GROUNDING DETAILS
NO SCALE

E-111A

REVISED BY	DATE	DATE REVISED
AWG	08/08	08/08
CALCULATED/DESIGNED BY	CHECKED BY	
RG		

DESIGN OVERSIGHT: BEHZAD GOLEMOHAMMADI

STATE OF CALIFORNIA - DEPARTMENT OF TRANSPORTATION

Caltrans

THIS PLAN IS ACCURATE FOR ELECTRICAL WORK ONLY.

ALL DIMENSIONS ARE IN MILLIMETERS UNLESS OTHERWISE SHOWN.

FOR REDUCED PLANS ORIGINAL SCALE IS IN MILLIMETERS 0 20 40 60 80

DGN FILE =>04-0120f1_0165S01R03.dgn
USERNAME =>llorico

CU 04251 | EA 0120F1

LAST REVISION 12-21-11
DATE PLOTTED => 25-APR-2012
TIME PLOTTED => 16:58

DIST	COUNTY	ROUTE	KILOMETER POST TOTAL PROJECT	SHEET No	TOTAL SHEETS
04	SF	80	13.2/13.9	271 S5R2	1204

REGISTERED ELECTRICAL ENGINEER DATE

PLANS APPROVAL DATE

REGISTERED PROFESSIONAL ENGINEER FADI WALIEDDINE No. 11465 Exp. 12/31/2009 ELECTRICAL STATE OF CALIFORNIA

PB AMERICAS, Inc.
A Parsons Brinckerhoff Company
303 Second St., Suite 700N
San Francisco, CA 94107-1317

The State of California or its officers or agents shall not be responsible for the accuracy or completeness of electronic copies of this plan sheet.

Caltrans now has a web site! To get to the web site, go to http://www.dot.ca.gov

Caltrans Metric

NOTES:

1. For reference drawing see Sheet E-264A.

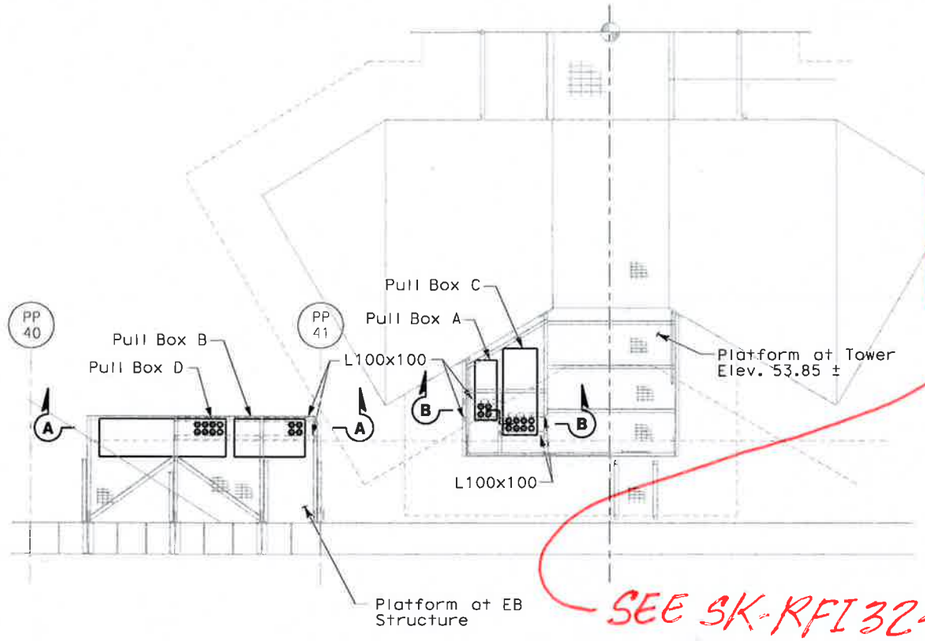

SEE SK-RFI3244K00-E264F-2

PLAN-PLATFORM AT ELEV 53.85

NO SCALE

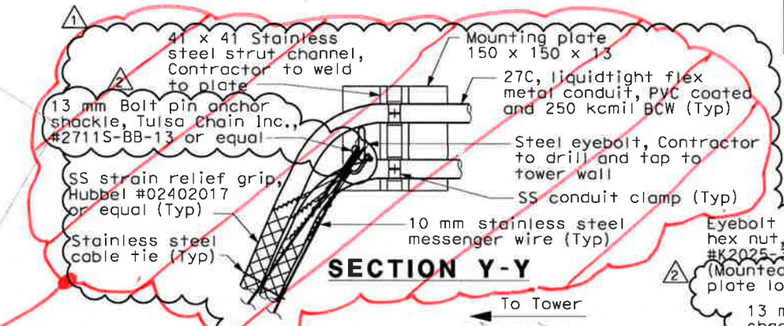

SECTION Y-Y

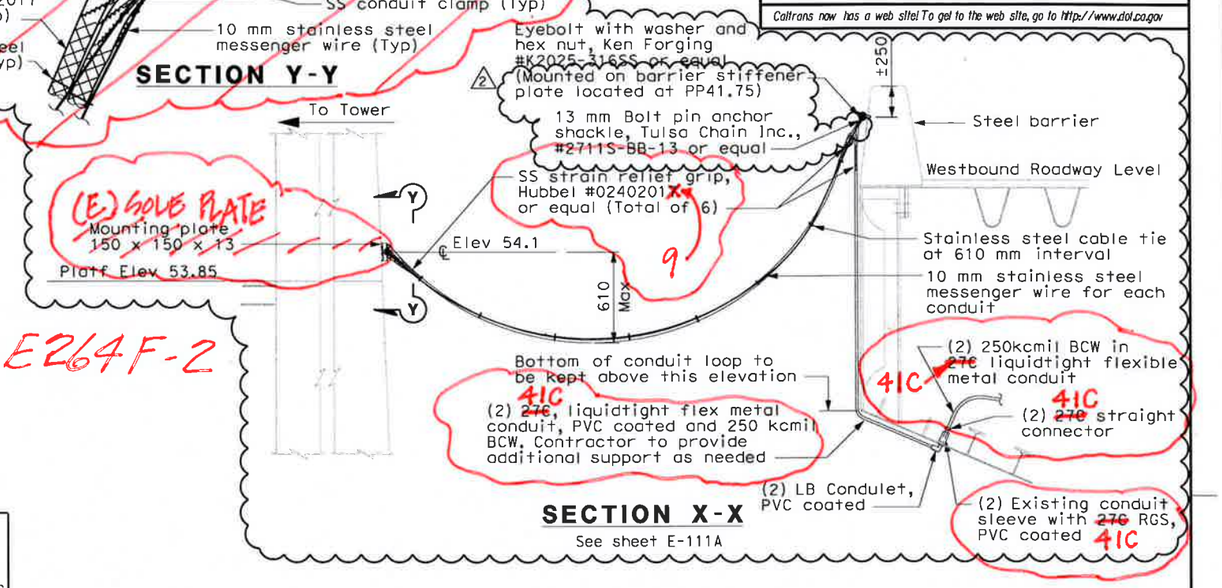

SECTION X-X

See sheet E-111A

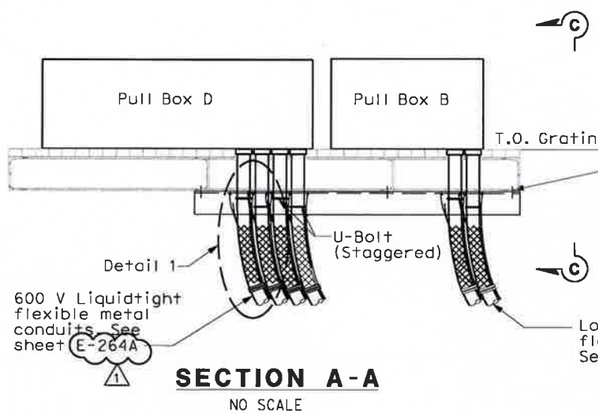

SECTION A-A

NO SCALE

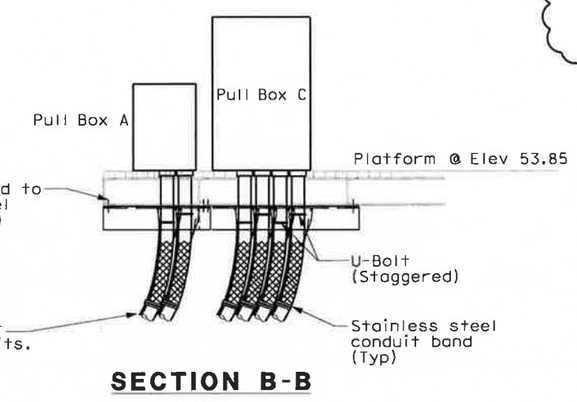

SECTION B-B

NO SCALE

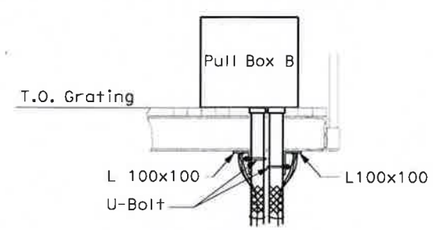

SECTION C-C

NO SCALE

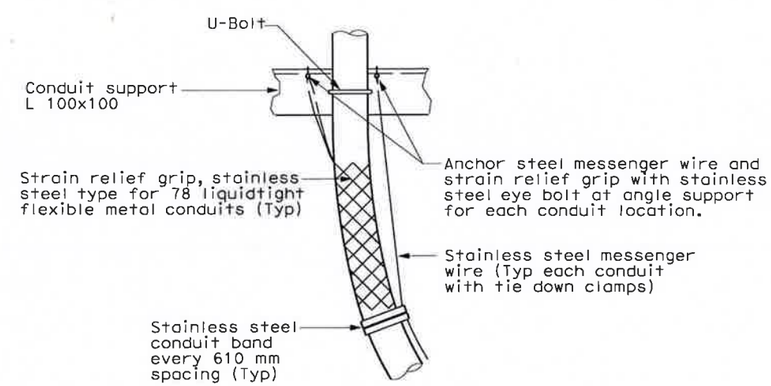

DETAIL 1

(TYPICAL)

REGISTERED PROFESSIONAL ENGINEER DAVID H. OTO No. 10699 Exp. 06/30/2013 ELECTRICAL STATE OF CALIFORNIA

FOR REVISION ONLY

1 2

REQUEST FOR INFORMATION NOT ADDRESSED IN THIS CCO REMAIN IN FORCE					
2	07/31/12	ELECTRICAL GROUNDING	RSB	RG	75
1	04/27/12	ELECTRICAL GROUNDING	RSB RM	RG	75
0	03/30/09	SERVICE PLATFORM ELECTRICAL CHANGES	RR RY	RG FW	55
MARK	DATE	DESCRIPTIONS	BY	CH'D	CCO#
		REVISIONS			

CONTRACT CHANGE ORDER NO._____
SHEET_____ OF_____

DETAILS
TOWER AND SUSPENSION CABLE

NO SCALE

SK-RFI3244K00-E264F-1
R. GARCIA 4/2/13

THIS PLAN ACCURATE FOR ELECTRICAL WORK ONLY.

ALL DIMENSIONS ARE IN MILLIMETERS UNLESS OTHERWISE SHOWN.

E-264F

STATE OF CALIFORNIA - DEPARTMENT OF TRANSPORTATION
Caltrans

DESIGN OVERSIGHT: BEHZAD GOLEMOHAMMADI

CALCULATED/DESIGNED BY | CHECKED BY | REVISED BY | DATE REVISED

LAST REVISION 00-00-00

DATE PLOTTED => 7/31/2012
TIME PLOTTED => 1:56:48 PM

FOR REDUCED PLANS ORIGINAL SCALE IS IN MILLIMETERS 0 20 40 60 80

DGN FILE =>T:\13103\MS\pse\SAS Struc\CCO\SAS CC075\2012-07-31 CCO_75 (Draft 6)\04-0120F1_027505R02.dgn
USERNAME =>garciar

CU 04251 | EA 0120F1

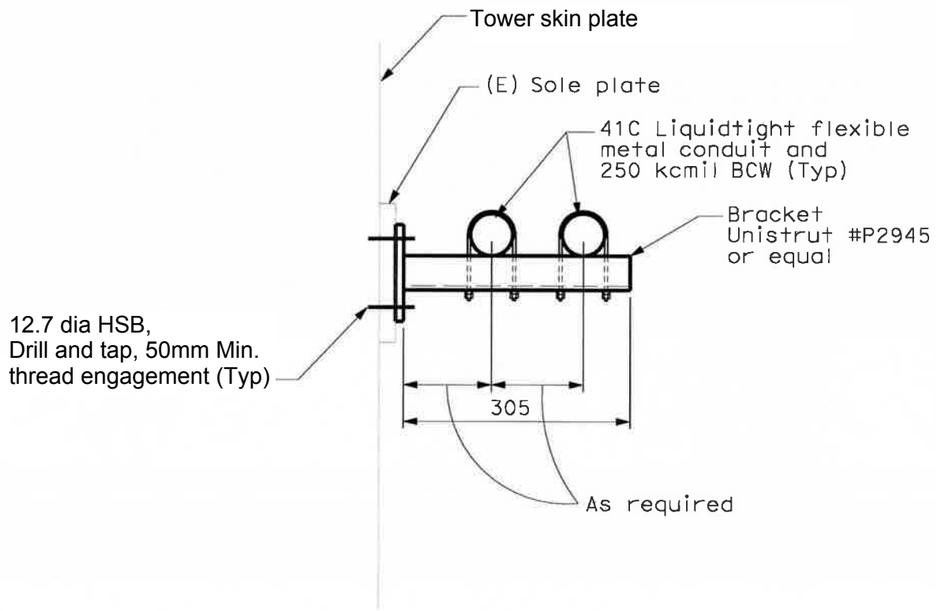

SECTION D-D

NO SCALE

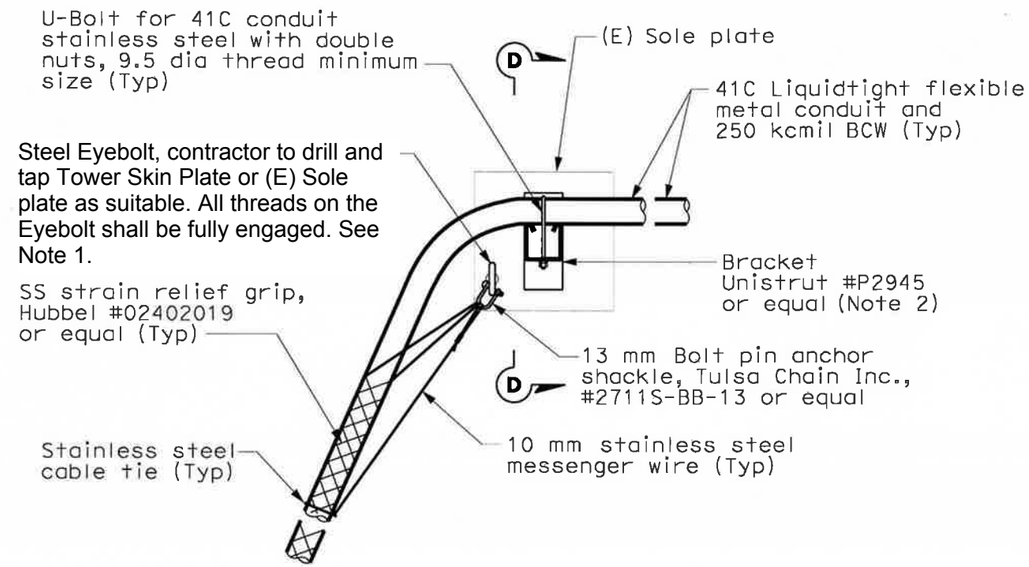

SECTION Y-Y

NO SCALE

NOTES:

1. Eyebolt location to suit field condition.
2. Bracket may be rotated 180 degree if U-bolt is not available with longer thread length. Conduit shall be placed on top of channel strut.

SK-RFI3244R00-E264F-2

R. GARCIA **APRIL 02, 2013**

PARSONS BRINCKERHOFF
303 2nd St Suite 700N, San Francisco, CA 94107-1317
Main Desk: (415) 243-4600 Fax: (415) 243-9501

RFI Response

To: Caltrans

Attn: Bill Shedd, Martin Chandrawinata, Stanley Ku

Project: 04-0120F4 - SAS

RFI Date: 03/28/2013

RFI No: 3244R00

Subject: **System Ground, West Girder to Tower**

Background:

Contractor is requesting an alternate detail for conduit support for the system ground on D face of the NE* Tower quadrant. Contractor is also requesting the size of the conduit that encloses the system ground be changed from 27C to 41C.

*The conduit support for the system ground is located on the D face of the NW Tower quadrant and NOT on the D face of the NE Tower quadrant as indicated in the RFI.

Response:

The information requested in the RFI is reflected in the attached sketch SK-RFI3244R00-E264F-2. The sketch depicts the recommended conduit and support installation configuration for the system ground on D face of the NW Tower quadrant. The revised configuration will allow for bolting of the conduit support to the Tower skin plate in lieu of welding that was specified on contract plan sheet 271S5R2.

Sketches SK-RFI3244R00-E97, SK-RFI3244R00-E111A and SK-RFI3244R00-E264F-1 are also attached reflecting the change in the conduit size from 27C to 41C as requested by the Contractor.

Referenced Document(s):

- Contract Plan Sheet(s) 150R2, 165S1R3, 271S5R2/1204.

Potential Design/Cost Impact from this RFI:

- ☐ No Change.
- ☒ Change with no cost.
- ☐ Change with cost.
- ☐ Change with Credit.
- ☐ Change, but cost cannot be determined at this time.

Date:	04/03/2013 (Revised)	**Respondent:**	Rocky Garcia	**Phone No.:**	415 243 4735
		QA/QC:	Adil Mohammed	**Phone No.:**	415 813 8403

DIST	COUNTY	ROUTE	KILOMETER POST TOTAL PROJECT	SHEET No	TOTAL SHEETS
04	SF	80	13.2/13.9	150 R2	1204

12/19/02
REGISTERED ELECTRICAL ENGINEER DATE

12-6-04
PLANS APPROVAL DATE

REGISTERED PROFESSIONAL ENGINEER JENS ERLINGSSON No. 8249 Exp. 9/30/06 ELECTRICAL STATE OF CALIFORNIA

PB POWER, Inc.
A Parsons Brinckerhoff Company
303 Second St., Suite 700N
San Francisco, CA 94107-1317

The State of California or its officers or agents shall not be responsible for the accuracy or completeness of electronic copies of this plan sheet.

Caltrans now has a web site! To get to the web site, go to http://www.dot.ca.gov

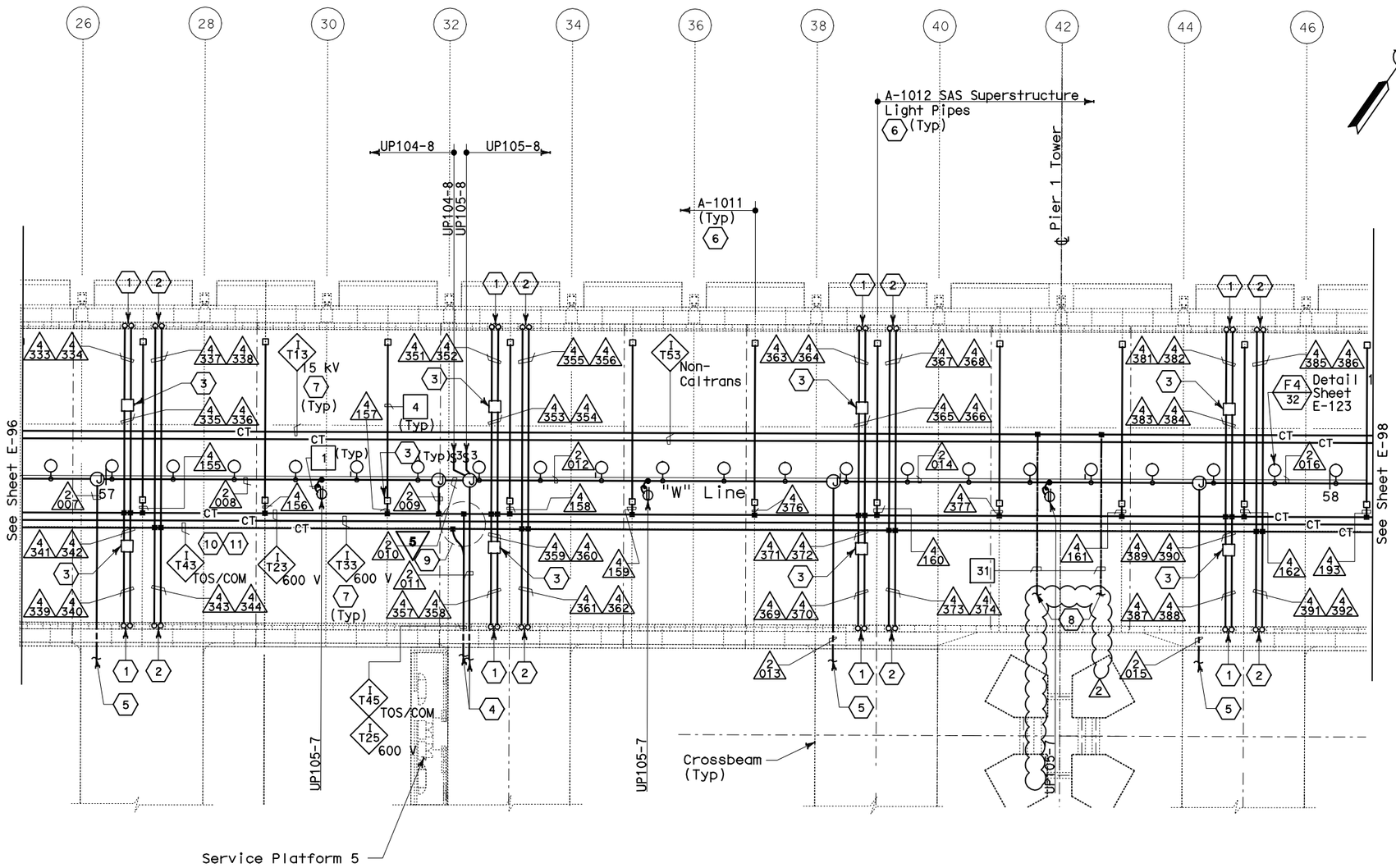

SHEET NOTES:

1. Conduit up to PB-LTG located in barrier, see sheet E-47.
2. Conduit up to PB-COM located in barrier, see sheet E-47.
3. PB-2A locate on top of floor.
4. For cable tray run and lighting inside crossbeam, see sheet E-115.
5. For lighting inside crossbeam, see sheet E-119.
6. PB-2L with circuit for future light pipes. See sheet E-121 for installation details and E-130 for lighting schedule.
7. For cable tray & ground bar support, refer to sheet E-125.
8. 250 kcmil copper grounding conductor exothermically welded ~~to 500 kcmil system grounding conductor.~~ Route 250kcmil BCW in ~~2-370~~ 41C liquidtight flexible metal conduit. For continuation, see sheet E-111A.
9. For fiber splice tray detail, refer to sheet E-355.
10. Furnish and install 1-25.4 mm innerduct per BASE fiber optic cable in TOS/COM cable tray.
11. Furnish and install BASE fiber optic cable in innerduct. See sheet E-1100.

NOTES:

1. References:
   - TOS equipment is shown for conduit routing only. For typical details of TOS controller and devices, see sheets E-344 through E-357.
   - For types of pull boxes, splice boxes and enclosures, see sheet E-83.
   - For bridge grounding plan, see sheet E-111.
   - For circuit and conduit/cable tray schedules, see sheets starting at E-401.
2. For other related work not shown on this sheet, see Electrical Special Provisions.
3. The girder lighting fixtures are shown diagrammatically.Contractor shall install fixtures at railing posts with a maximum of 8000 mm between fixtures. For types and typical lighting fixture installation details, see sheet E-123.
4. The cable trays are shown diagrammatically. For typical girder cable tray plans and sections, see sheets E-124 and E-125.

REGISTERED PROFESSIONAL ENGINEER SYN YEE CHIN No. 18186 Exp. 09/30/2011 ELECTRICAL STATE OF CALIFORNIA

FOR REVISION ONLY 1

REGISTERED PROFESSIONAL ENGINEER DAVID H. OTO No. 10699 Exp. 06/30/2013 ELECTRICAL STATE OF CALIFORNIA

FOR REVISION ONLY 2

THIS PLAN IS ACCURATE FOR ELECTRICAL WORK ONLY.

SAS SUPERSTRUCTURE - CONDUIT AND CABLE TRAY PLAN

REQUEST FOR INFORMATION NOT ADDRESSED IN THIS CCO REMAIN IN FORCE

MARK	DATE	DESCRIPTIONS	BY	CH'D	CCO#
2	04/27/12	ELECTRICAL GROUNDING	RSB RM	RG	75
1	03/01/11	BASE INTEGRATION	RSB	WB	150

REVISIONS

CONTRACT CHANGE ORDER NO._____
SHEET _____ OF _____

SK-RFI3244R00-E97
Adil M. 4/3/13

SAS SUPERSTRUCTURE GIRDER WESTBOUND
LIGHTING AND ELECTRICAL SYSTEMS

SCALE 1:200

ALL DIMENSIONS ARE IN MILLIMETERS UNLESS OTHERWISE SHOWN.

E-97

DRAFT 1 (03/01/11)
STATE OF CALIFORNIA - DEPARTMENT OF TRANSPORTATION
Caltrans

DESIGN OVERSIGHT: BEHZAD GOLEMOHAMMADI

CALCULATED/ DESIGNED BY	FK	DATE 8/02	REVISED BY
CHECKED BY	IAH	8/02	DATE REVISED

FOR REDUCED PLANS ORIGINAL SCALE IS IN MILLIMETERS 0 20 40 60 80

DGN FILE =>04-0120f1_0150R02.dgn
USERNAME =>llorico

CU 04251 EA 0120F1

LAST REVISION 00-00-00
DATE PLOTTED => 25-APR-2012
TIME PLOTTED => 16:58

DIST	COUNTY	ROUTE	KILOMETER POST TOTAL PROJECT	SHEET No	TOTAL SHEETS
04	SF	80	13.2/13.9	165 S1R3	1204

REGISTERED ELECTRICAL ENGINEER 8/11/08 DATE

PLANS APPROVAL DATE

REGISTERED PROFESSIONAL ENGINEER FADI WALIEDDINE No. 11465 Exp. 12/31/2009 ELECTRICAL STATE OF CALIFORNIA

PB AMERICAS, Inc.
A Parsons Brinckerhoff Company
303 Second St., Suite 700N
San Francisco, CA 94107-1317

The State of California or its officers or agents shall not be responsible for the accuracy or completeness of electronic copies of this plan sheet.

Caltrans now has a web site! To get to the web site, go to http://www.dot.ca.gov

Metric

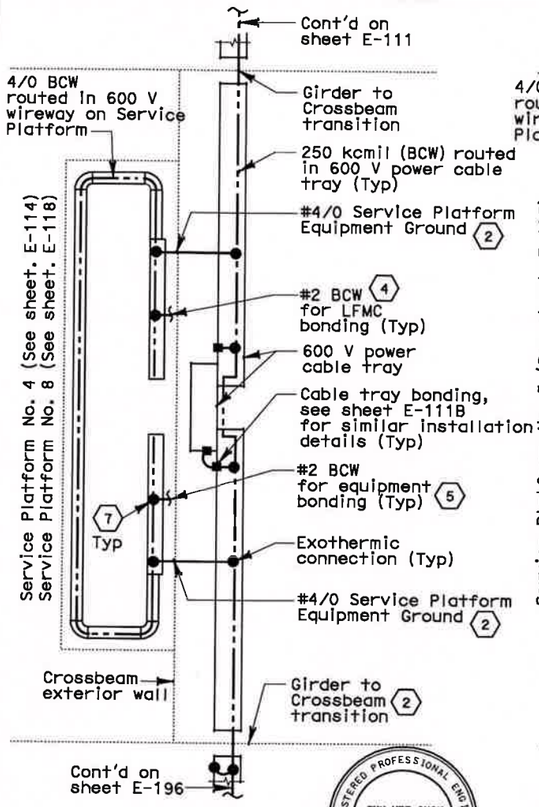

DETAIL 6

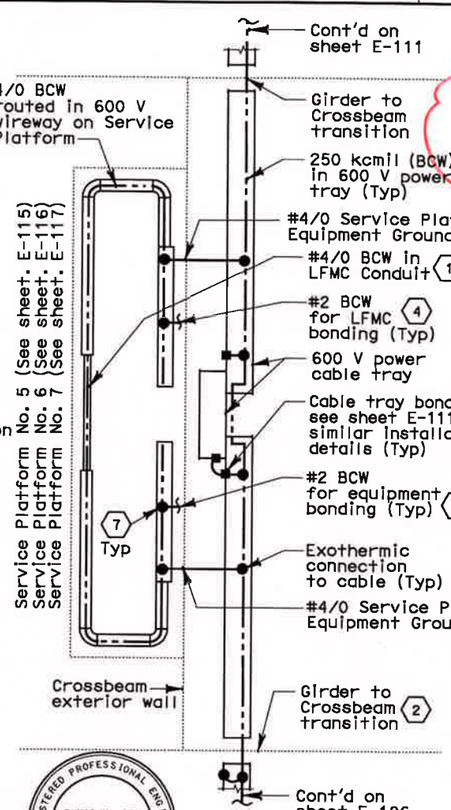

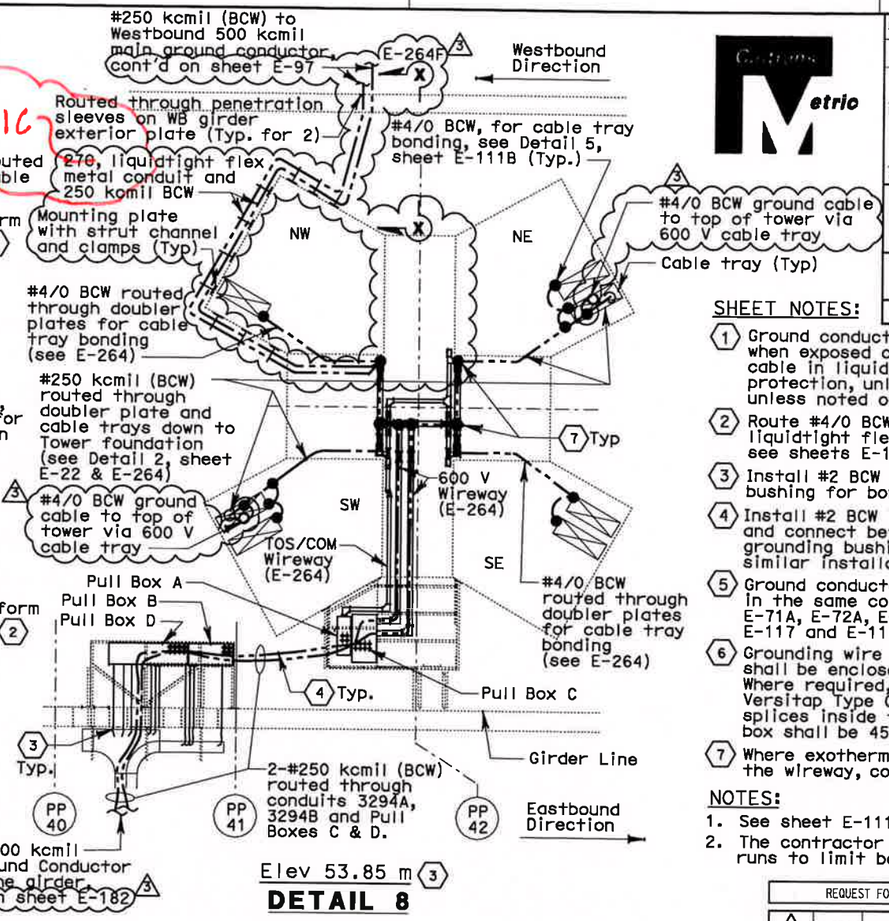

Elev 53.85 m (3)

DETAIL 8

SHEET NOTES:

1. Ground conductor shall be protected from damage when exposed outside the structures. Route ground cable in liquidtight flexible metal conduit (LFMC) for protection, unless routed in cable tray or wireway unless noted otherwise.
2. Route #4/0 BCW through crossbeam exterior wall in liquidtight flexible metal conduit via conduit sleeves, see sheets E-114, E-115, E-116, E-117 and E-118.
3. Install #2 BCW grounding conductors to grounding bushing for bonding conduits to cable tray.
4. Install #2 BCW inside each liquidtight flex metal conduit and connect between the grounding wire and the conduit grounding bushing, see Detail 7 on sheet E-111B for similar installation.
5. Ground conductor for equipment bonding shall be routed in the same conduit connected to equipment, see sheets E-71A, E-72A, E-73A, E-74A, E-75A, E-114, E-115, E-116, E-117 and E-118 for equipment arrangement.
6. Grounding wire splices exposed outside the structures shall be enclosed with NEMA 4X pull box for protection. Where required, mechanical connection using Burndy Versitap Type QPX clamps or equal may be used for splices inside the box in lieu of exothermic weld. Pull box shall be 457 x 305 x 152D or size as required.
7. Where exothermic weld connection is not feasible inside the wireway, compression type connectors may be used.

NOTES:

1. See sheet E-111 for additional notes and sheet notes.
2. The contractor shall install pull box/JB(s) along conduit runs to limit bends to be three (3) 90 degrees or fewer.

REGISTERED PROFESSIONAL ENGINEER SYN YEE CHIN No. 18186 Exp. 09/30/2011 ELECTRICAL STATE OF CALIFORNIA

REGISTERED PROFESSIONAL ENGINEER DAVID H. OTO No. 10699 Exp. 06/30/2013 ELECTRICAL STATE OF CALIFORNIA

Syn Yee Chin FOR REVISION ONLY (1)

David H. Oto FOR REVISION ONLY (2) (3)

REQUEST FOR INFORMATION NOT ADDRESSED IN THIS CCO REMAIN IN FORCE					
3	04/27/12	ELECTRICAL GROUNDING	RSB RM	RG	75
2	12/21/11	ELECTRICAL CHANGE FOR ELEVATION 53 IMPROVEMENTS	TW	RG	190
1	09/02/11	TOWER SUSPENDER CABLE & ELEVATOR	RM	TW	203S1
0	11/20/09	ELECTRICAL GROUNDING	AG RR	RG	75
MARK	DATE	DESCRIPTIONS	BY	CH'D	CCO#
		REVISIONS			

CONTRACT CHANGE ORDER NO. _____
SHEET ____ OF ____

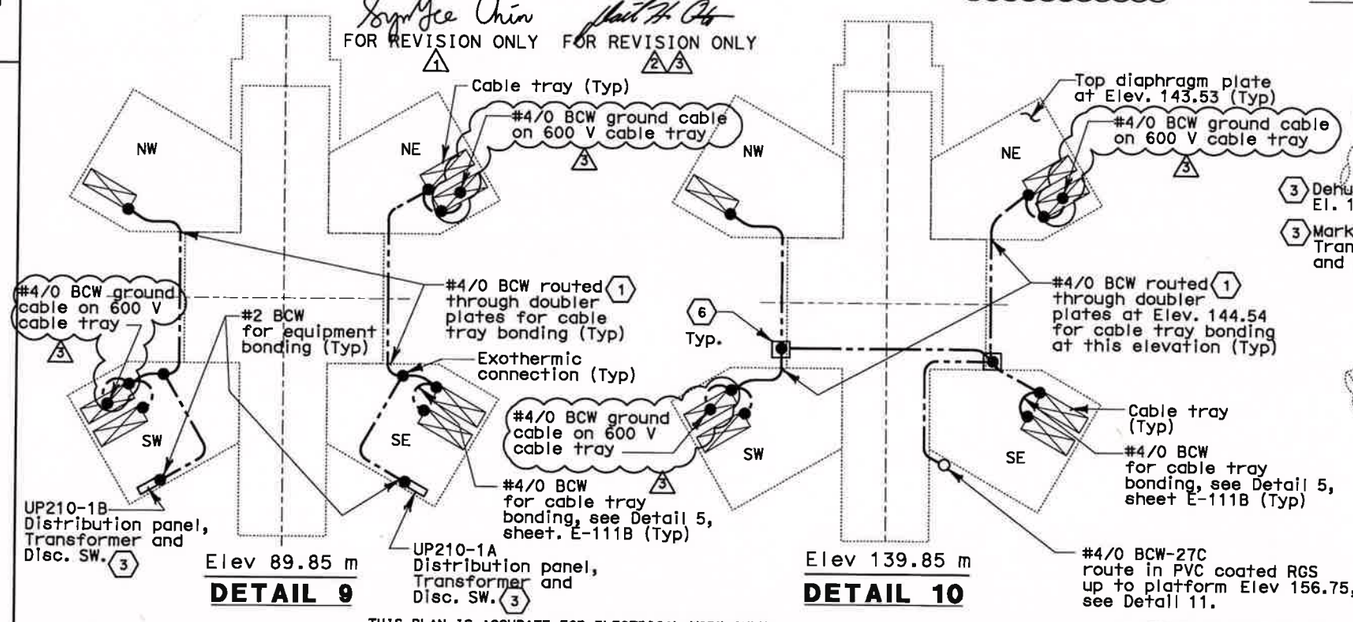

Elev 89.85 m

DETAIL 9

Elev 139.85 m

DETAIL 10

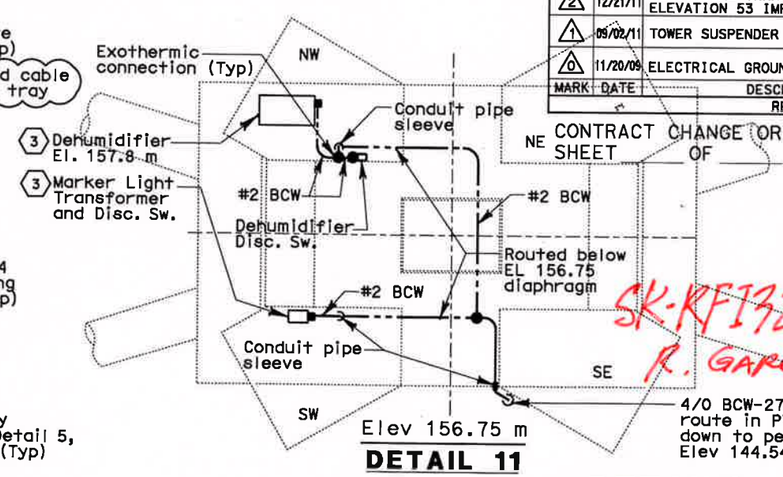

Elev 156.75 m

DETAIL 11

SK-RFI3244R00-E111A
R. GARCIA 4/3/13

DETAILS
SAS SUPERSTRUCTURE GIRDER WESTBOUND GROUNDING DETAILS
NO SCALE

E-111A

REVISED BY	DATE	DATE REVISED
AWG	08/08	08/08
CALCULATED/DESIGNED BY	CHECKED BY	
RG		

DESIGN OVERSIGHT: BEHZAD GOLEMOHAMMADI

STATE OF CALIFORNIA - DEPARTMENT OF TRANSPORTATION

Caltrans

THIS PLAN IS ACCURATE FOR ELECTRICAL WORK ONLY.

ALL DIMENSIONS ARE IN MILLIMETERS UNLESS OTHERWISE SHOWN.

FOR REDUCED PLANS ORIGINAL SCALE IS IN MILLIMETERS 0 20 40 60 80

DGN FILE =>04-0120f1_0165S01R03.dgn
USERNAME =>llorico

CU 04251 | EA 0120F1

LAST REVISION 12-21-11
DATE PLOTTED => 25-APR-2012
TIME PLOTTED => 16:58

DIST	COUNTY	ROUTE	KILOMETER POST TOTAL PROJECT	SHEET No	TOTAL SHEETS
04	SF	80	13.2/13.9	271 S5R2	1204

REGISTERED ELECTRICAL ENGINEER DATE

PLANS APPROVAL DATE

REGISTERED PROFESSIONAL ENGINEER FADI WALIEDDINE No. 11465 Exp. 12/31/2009 ELECTRICAL STATE OF CALIFORNIA

PB AMERICAS, Inc.
A Parsons Brinckerhoff Company
303 Second St., Suite 700N
San Francisco, CA 94107-1317

The State of California or its officers or agents shall not be responsible for the accuracy or completeness of electronic copies of this plan sheet.

Caltrans now has a web site! To get to the web site, go to http://www.dot.ca.gov

Caltrans Metric

NOTES:

1. For reference drawing see Sheet E-264A.

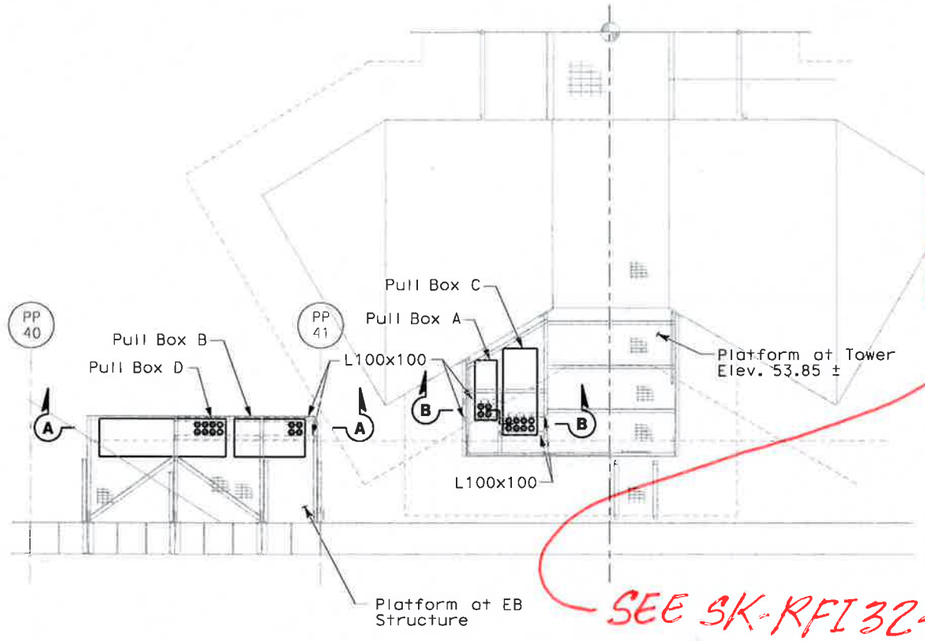

SEE SK-RFI3244K00-E264F-2

PLAN-PLATFORM AT ELEV 53.85

NO SCALE

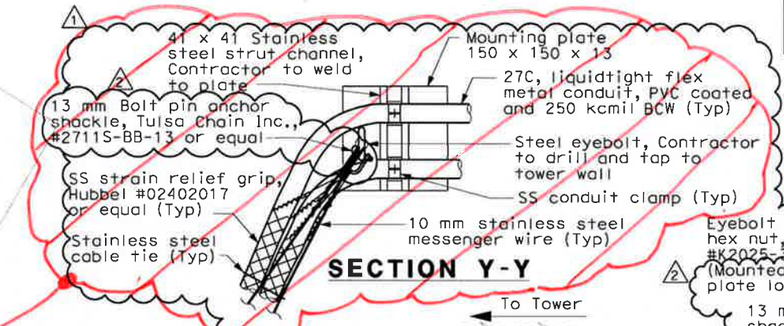

SECTION Y-Y

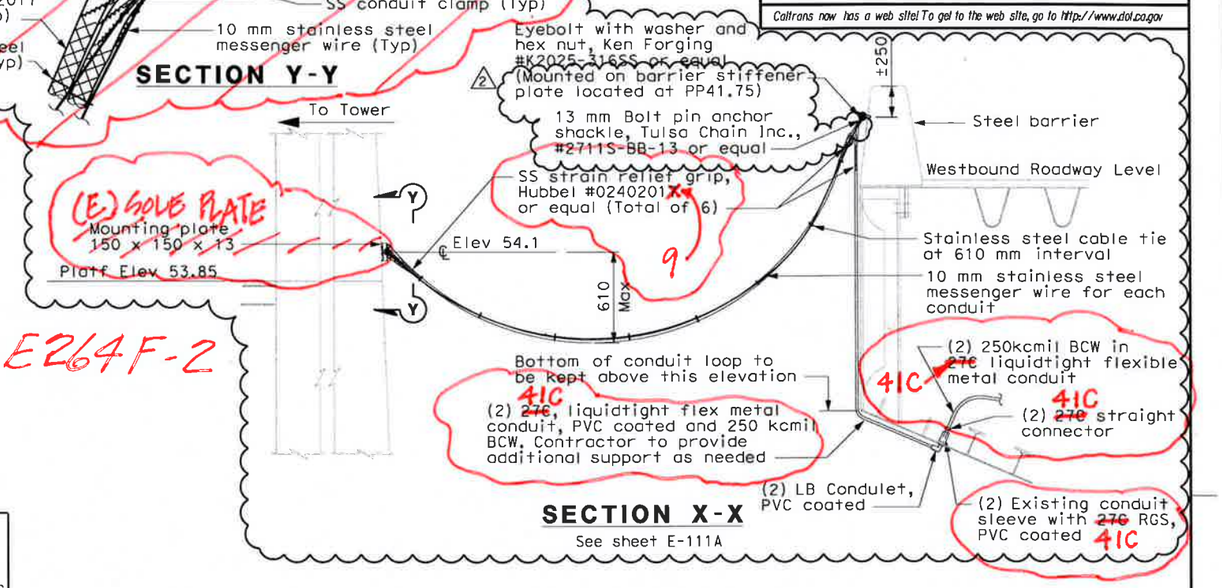

SECTION X-X

See sheet E-111A

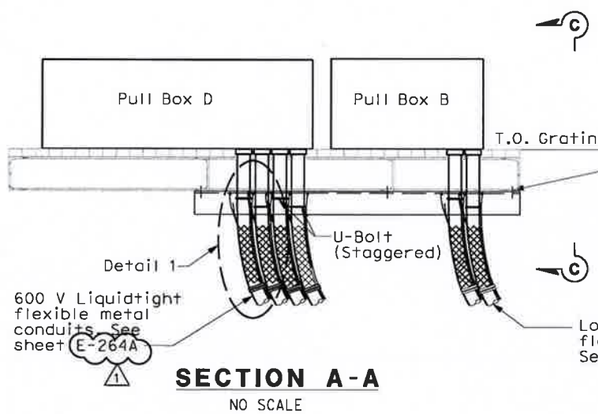

SECTION A-A

NO SCALE

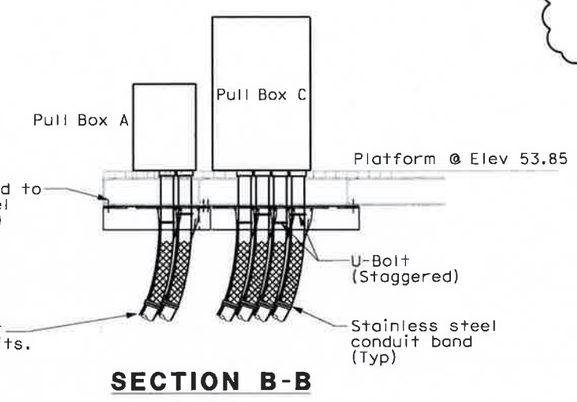

SECTION B-B

NO SCALE

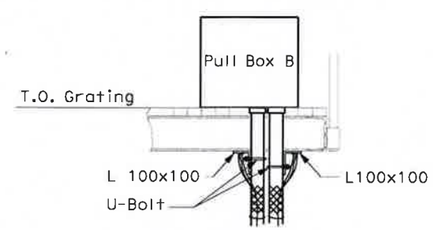

SECTION C-C

NO SCALE

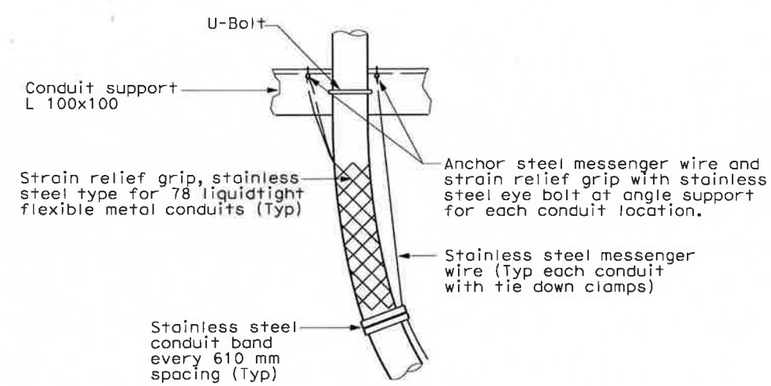

DETAIL 1

(TYPICAL)

REGISTERED PROFESSIONAL ENGINEER DAVID H. OTO No. 10699 Exp. 06/30/2013 ELECTRICAL STATE OF CALIFORNIA

FOR REVISION ONLY

1 2

REQUEST FOR INFORMATION NOT ADDRESSED IN THIS CCO REMAIN IN FORCE					
2	07/31/12	ELECTRICAL GROUNDING	RSB	RG	75
1	04/27/12	ELECTRICAL GROUNDING	RSB RM	RG	75
0	03/30/09	SERVICE PLATFORM ELECTRICAL CHANGES	RR RY	RG FW	55
MARK	DATE	DESCRIPTIONS	BY	CH'D	CCO#
		REVISIONS			

CONTRACT CHANGE ORDER NO._____
SHEET_____ OF_____

DETAILS
TOWER AND SUSPENSION CABLE

NO SCALE

SK-RFI3244K00-E264F-1
R. GARCIA 4/2/13

THIS PLAN ACCURATE FOR ELECTRICAL WORK ONLY.

ALL DIMENSIONS ARE IN MILLIMETERS UNLESS OTHERWISE SHOWN.

E-264F

STATE OF CALIFORNIA - DEPARTMENT OF TRANSPORTATION
Caltrans

DESIGN OVERSIGHT: BEHZAD GOLEMOHAMMADI

CALCULATED/DESIGNED BY | CHECKED BY | REVISED BY | DATE REVISED

LAST REVISION 00-00-00

DATE PLOTTED => 7/31/2012
TIME PLOTTED => 1:56:48 PM

FOR REDUCED PLANS ORIGINAL SCALE IS IN MILLIMETERS 0 20 40 60 80

DGN FILE =>T:\13103\MS\pse\SAS Struc\CCO\SAS CC075\2012-07-31 CCO_75 (Draft 6)\04-0120F1_027505R02.dgn
USERNAME =>garciar

CU 04251 | EA 0120F1

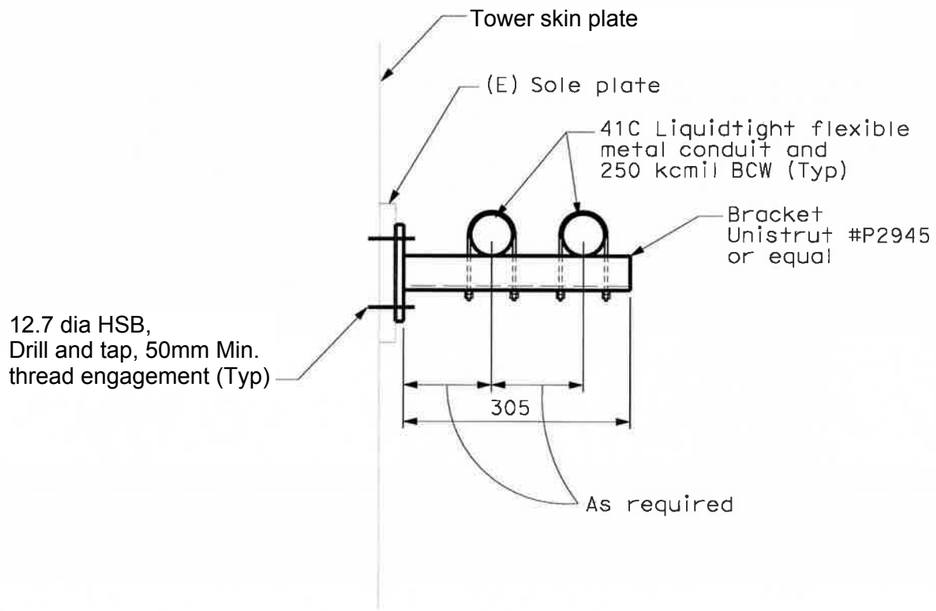

SECTION D-D

NO SCALE

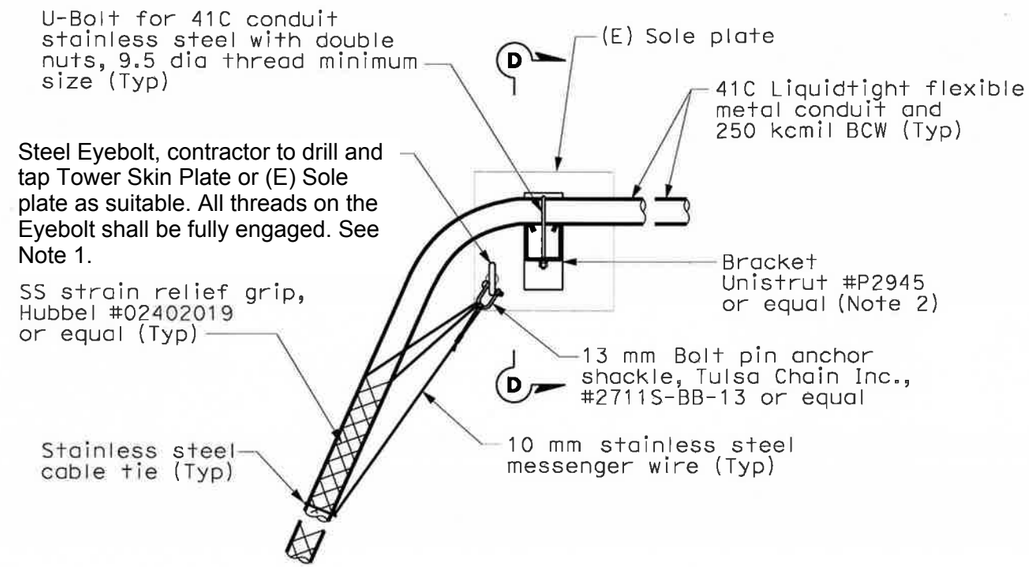

SECTION Y-Y

NO SCALE

NOTES:

1. Eyebolt location to suit field condition.
2. Bracket may be rotated 180 degree if U-bolt is not available with longer thread length. Conduit shall be placed on top of channel strut.

SK-RFI3244R00-E264F-2

R. GARCIA **APRIL 02, 2013**

SFOBB – SAS Project
Two Harrison Street, Suite 500, San Francisco, CA 94105
Telephone (415) 291-3700 Facsimile (415) 433-0807

REQUEST FOR INFORMATION (RFI) RESPONSE

SFOBB SAS Project # 04-0120F4

To:	Caltrans	Date:	March 28, 2013
	333 Burma Road	Date Received:	March 28, 2013
	Oakland, CA 94607	Contract No:	04-0120F4
			04-SF-80-13.2/ 13.9
Attn:	Stanley Ku	Job Name:	SAS Project – SFOBB

RFI No.: 3244R0

Subject: System Ground, West Girder to Tower

Background:

None.

Response to RFI:

PB to respond.

Attachment to RFI Response:

None

Internal JV Action:

Plans: None.

Special Provisions: None.

Potential Design / Cost Impact:
- ☒ No Change
- ☐ Change w/ No Cost
- ☐ Change w/ Cost
- ☐ Change w/ Credit

Potential Time Impact:
- ☒ No
- ☐ Yes

Answered By: A. Baumberger

QA / QC By: M. Nader, J. Duxbury

CC: File: TYLIN/MN-