DIST	COUNTY	ROUTE	KILOMETER POST TOTAL PROJECT	SHEET No	TOTAL SHEETS
04	SF	80	13.2/13.9	86 S37R1	1204

REGISTERED CIVIL ENGINEER 3/27/13

PLANS APPROVAL DATE

REGISTERED PROFESSIONAL ENGINEER SAFIUDDIN A. MOHAMMED No. 71894 CIVIL STATE OF CALIFORNIA

The State of California or its officers or agents shall not be responsible for the accuracy or completeness of electronic copies of this plan sheet.

Parsons Brinckerhoff Quade & Douglas, Inc.
303 Second Street, Suite 700N
San Francisco, CA 94107

Caltrans now has a web site! To get to the web site, go to: http://www.dot.ca.gov

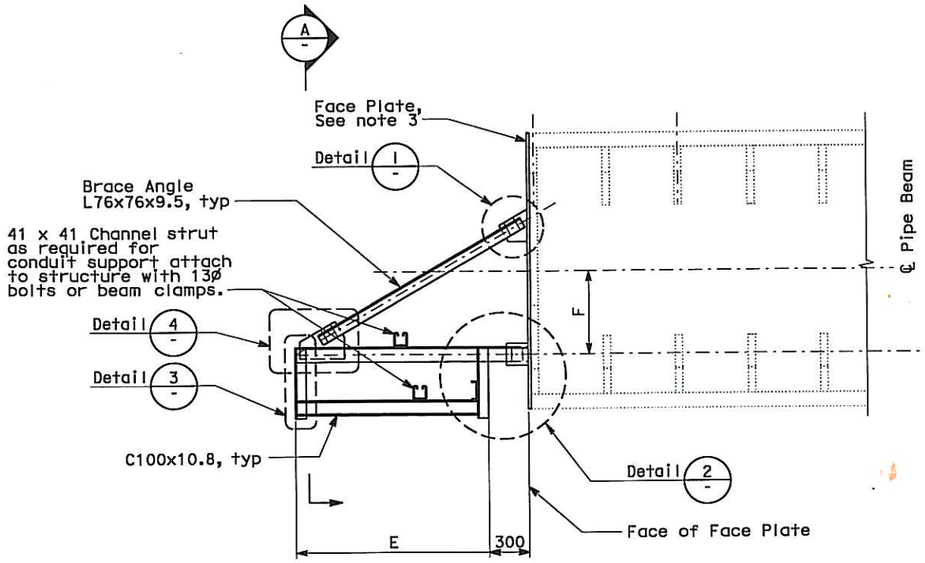

CONDUIT SUPPORT AT PIPE BEAM

SEE TABLE FOR DIMENSIONS
SCALE: NO SCALE

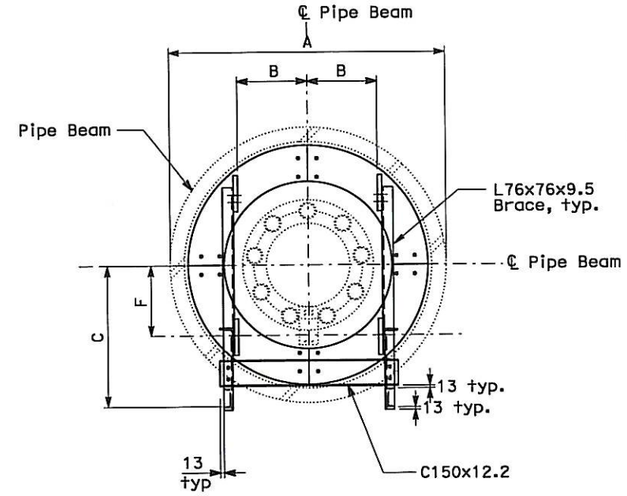

SECTION A-A

NO SCALE

TABLE CONDUIT SUPPORT DIMENSIONS

	Hinge A
A	1900
B	600
C	991
D	420
E	1335
F	574

NOTES:

1. For General Structural Notes, see AS-1.
2. For other details not shown, see electrical plans.
3. See sheet AS-35A for face plate.

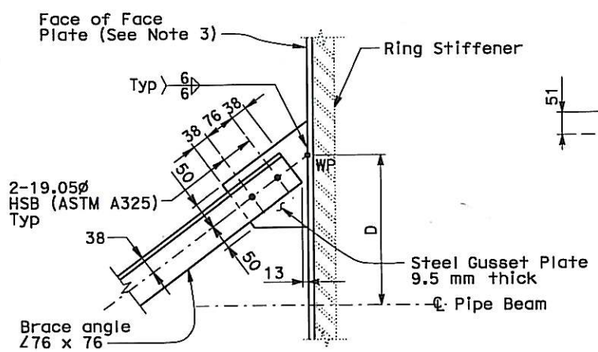

1 DETAIL

SEE TABLE FOR DIMENSIONS
NO SCALE

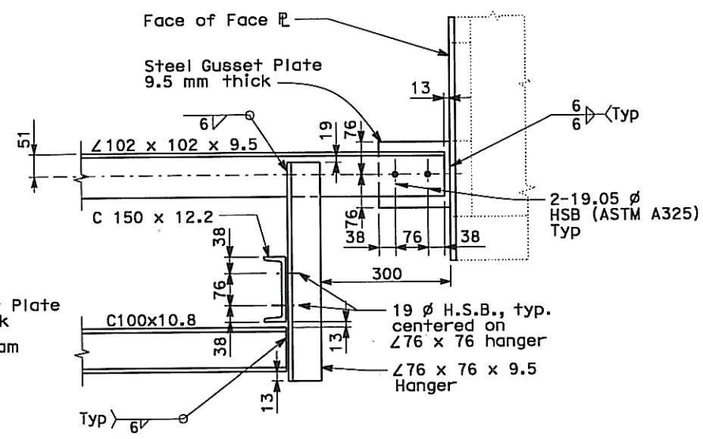

2 DETAIL

NO SCALE

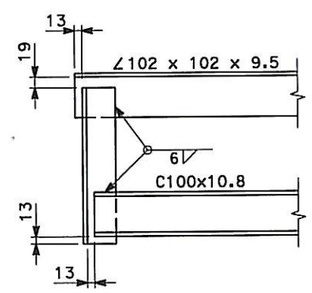

3 DETAIL

NO SCALE

(Brace not shown for clarity)

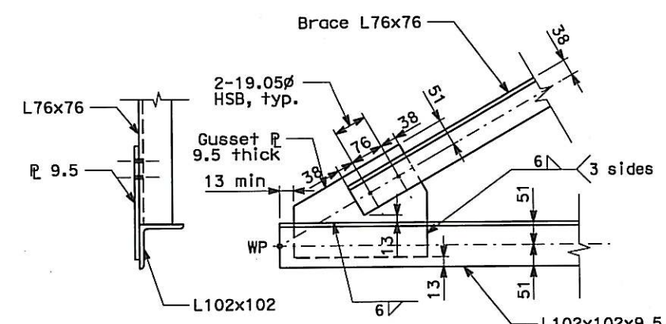

4 DETAIL

NO SCALE

(Hanger L76x76 not shown for clarity)

REQUEST FOR INFORMATION NOT ADDRESSED IN THIS CCO REMAIN IN FORCE

MARK	DATE	DESCRIPTIONS	BY	CH'D	CCO#
1	10/23/13	ADDITIONAL SAS MISCELLANEOUS ELECTRICAL CHANGES	SAM	JZ	191S2
0	03/27/13	ADDITIONAL SAS MISCELLANEOUS ELECTRICAL CHANGES	SAM	RG	191S2

REVISIONS

CONTRACT CHANGE ORDER NO. 191 S2
SHEET 3 OF 40

ALL DIMENSIONS ARE IN MILLIMETERS UNLESS OTHERWISE SHOWN

DESIGN	BY S. Mohammed	CHECKED R. Garcia	
DETAILS	BY E. Llorico	CHECKED R. Garcia	
QUANTITIES	BY	CHECKED	

PREPARED FOR THE STATE OF CALIFORNIA DEPARTMENT OF TRANSPORTATION

Brady Nadell
PROJECT ENGINEER

BRIDGE NO. 34-0006
KILOMETER POST 13.2/13.9

SAS/SKYWAY SUPERSTRUCTURE

GIRDER CONDUIT/CABLE TRAY SUPPORT DETAIL - SHEET 1 OF 5

AS-35

SHEET OF

DISREGARD PRINTS BEARING EARLIER REVISION DATES

REVISION DATES (PRELIMINARY STAGE ONLY)

ORIGINAL SCALE IN MILLIMETERS FOR REDUCED PLANS 0 10 20 30 40 50 60 70 80 90 100

CU 04251
EA 0120F1

FILE => 04-0120f1_086S37r01.dgn

DESIGN DETAIL SHEET (METRIC) (REV. 3/1/98)

T:\13103\WS\pae\SAS Struc\CCO\SAS CCO191S2\2013.10.23_Draft 2 Submittal\04-0120f1_086S37r01.dgn

USERNAME => Llorico DATE PLOTTED => 21-OCT-2013 TIME PLOTTED => 16:54

DIST	COUNTY	ROUTE	KILOMETER POST TOTAL PROJECT	SHEET No	TOTAL SHEETS
04	SF	80	13.2/13.9	86 S38R1	1204

REGISTERED CIVIL ENGINEER 3/27/13

PLANS APPROVAL DATE

REGISTERED PROFESSIONAL ENGINEER SAFIUDDIN A. MOHAMMED No. 71894 CIVIL STATE OF CALIFORNIA

The State of California or its officers or agents shall not be responsible for the accuracy or completeness of electronic copies of this plan sheet.

Parsons Brinckerhoff Quade & Douglas, Inc.
303 Second Street, Suite 700N
San Francisco, CA 94107

Caltrans now has a web site! To get to the web site, go to: http://www.dot.ca.gov

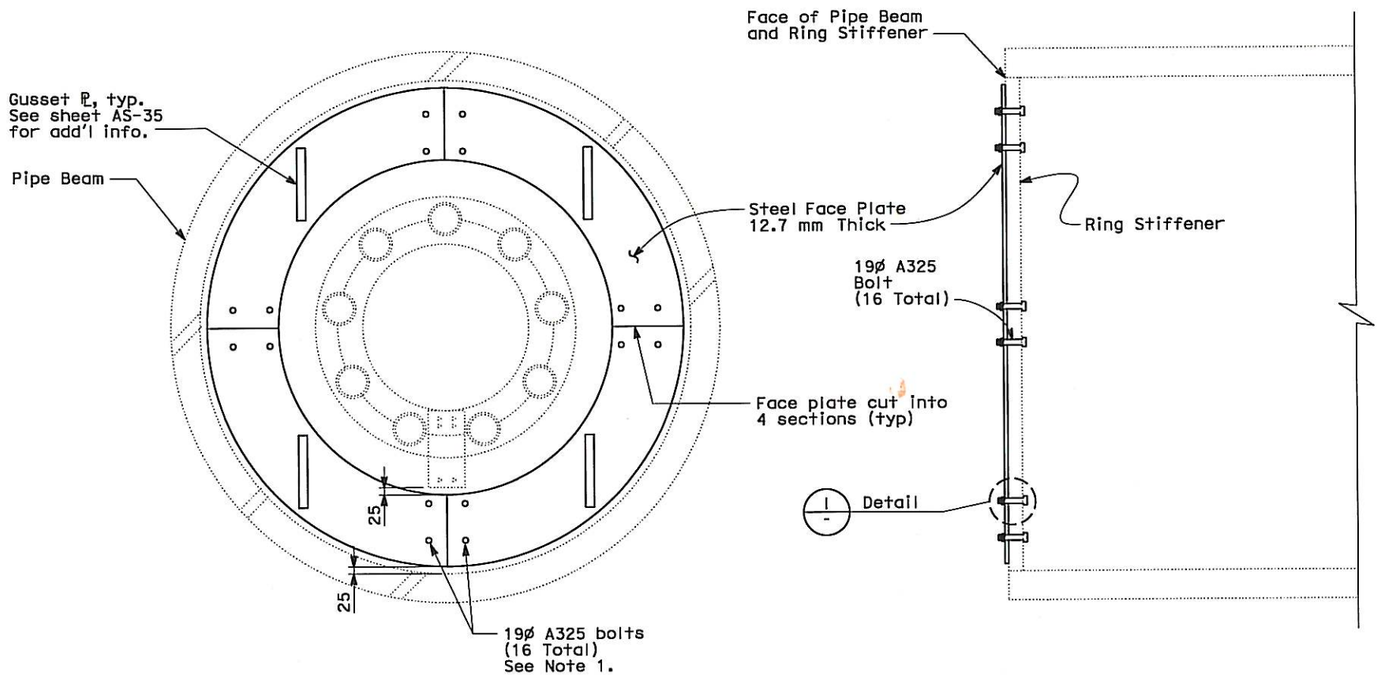

FACE PLATE AT PIPE BEAM

NO SCALE

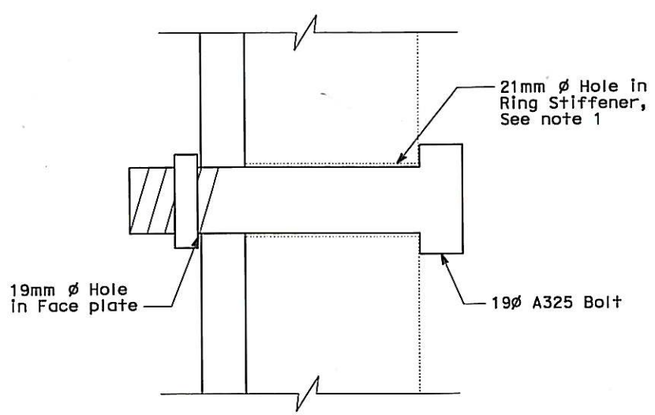

DETAIL

NO SCALE

NOTES:

1. Bolt locations in face plate shall match existing bolt pattern in ring stiffener as shown. Verify existing bolt holes sizes in field.
2. Bolts shall be installed with lock washer.
3. All structural steel shall be hot-dipped galvanized.

REQUEST FOR INFORMATION NOT ADDRESSED IN THIS CCO REMAIN IN FORCE

MARK	DATE	DESCRIPTIONS	BY	CH'D	CCO#
1	10/23/13	ADDITIONAL SAS MISCELLANEOUS ELECTRICAL CHANGES	SAM	JZ	191S2
0	03/27/13	ADDITIONAL SAS MISCELLANEOUS ELECTRICAL CHANGES	SAM	RG	191S2

REVISIONS

CONTRACT CHANGE ORDER NO. 191 S2
SHEET 4 OF 40

ALL DIMENSIONS ARE IN MILLIMETERS UNLESS OTHERWISE SHOWN

DESIGN	BY S. Mohammed	CHECKED R. Garcia	
DETAILS	BY E. Llorico	CHECKED R. Garcia	
QUANTITIES	BY	CHECKED	

PREPARED FOR THE STATE OF CALIFORNIA DEPARTMENT OF TRANSPORTATION

Brady Nadell
PROJECT ENGINEER

BRIDGE NO. 34-0006
KILOMETER POST 13.2/13.9

SAS/SKYWAY SUPERSTRUCTURE

GIRDER CONDUIT/CABLE TRAY SUPPORT DETAIL - SHEET 2 OF 5 (1)

AS-35A

SHEET OF

CU 04251
EA 0120F1

DISREGARD PRINTS BEARING EARLIER REVISION DATES

REVISION DATES (PRELIMINARY STAGE ONLY)

DESIGN DETAIL SHEET (METRIC) (REV. 3/1/98)

ORIGINAL SCALE IN MILLIMETERS FOR REDUCED PLANS 0 10 20 30 40 50 60 70 80 90 100

FILE => 04-0120f1_086538r01.dgn

T:\13103\WS\pse\SAS Struc\CCO\SAS CCO191S2\2013.10.23_Draft 2 Submittal\04-0120f1_086538r01.dgn

USERNAME => LLorico DATE PLOTTED => 21-OCT-2013 TIME PLOTTED => 16:54

DIST	COUNTY	ROUTE	KILOMETER POST TOTAL PROJECT	SHEET No	TOTAL SHEETS
04	SF	80	13.2/13.9	86 S39R1	1204

REGISTERED CIVIL ENGINEER 3/27/13

PLANS APPROVAL DATE

REGISTERED PROFESSIONAL ENGINEER SAFIUDDIN A. MOHAMMED No. 71894 CIVIL STATE OF CALIFORNIA

The State of California or its officers or agents shall not be responsible for the accuracy or completeness of electronic copies of this plan sheet.

Parsons Brinckerhoff Quade & Douglas, Inc.
303 Second Street, Suite 700N
San Francisco, CA 94107

Caltrans now has a web site! To get to the web site, go to: http://www.dot.ca.gov

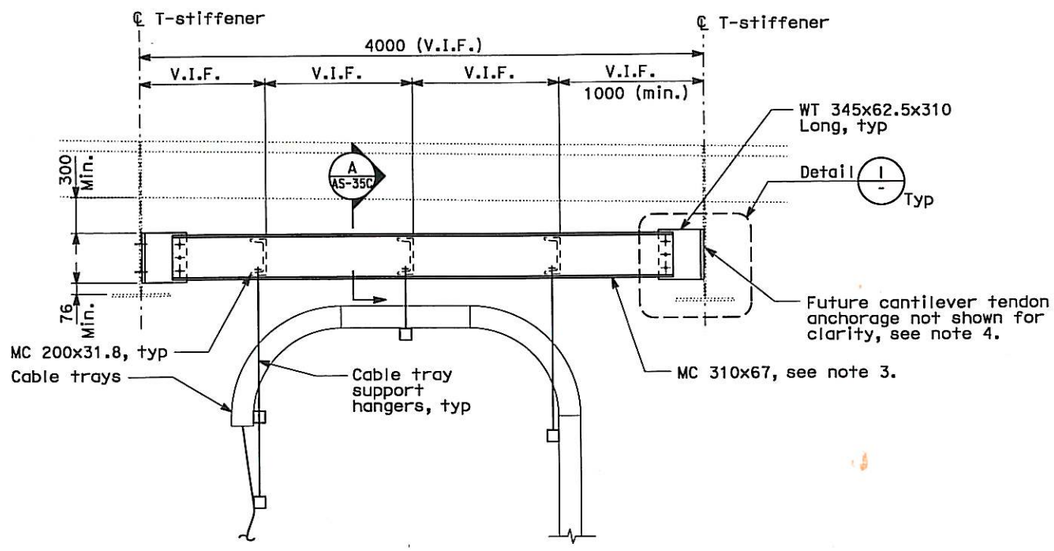

CONDUIT TRAY/CONDUIT SUPPORT AT CEILING

NO SCALE

NOTES:

1. For General Structural Notes, see AS-1.
2. For other details not shown, see electrical plans.
3. MC channel shall be installed in true horizontal position.
4. Contractor shall maintain 305 min. clr. in all directions around future tendon anchorage zone.

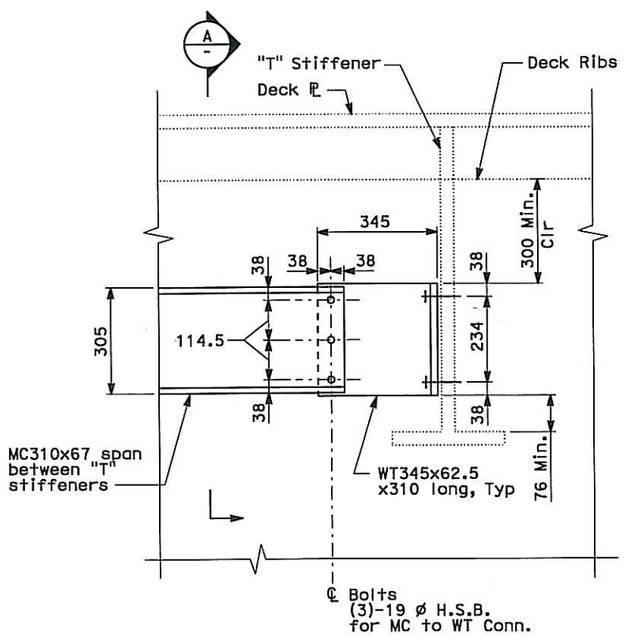

DETAIL 1

NTS

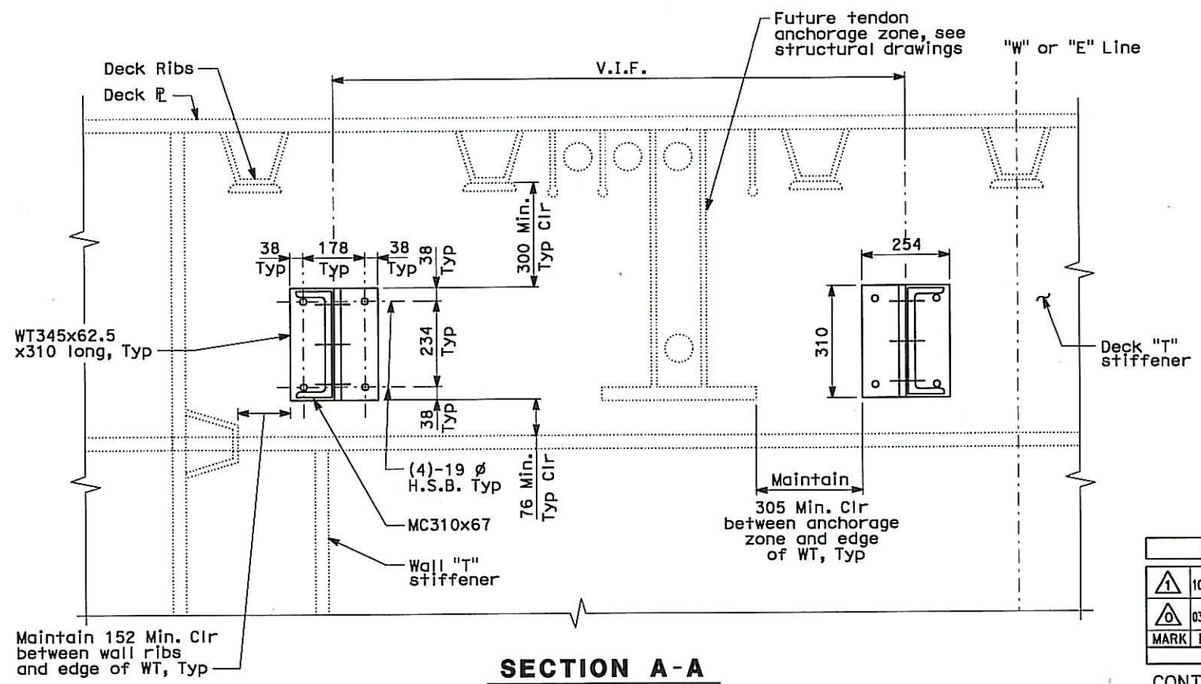

SECTION A-A

NO SCALE

ALL DIMENSIONS ARE IN MILLIMETERS UNLESS OTHERWISE SHOWN

REQUEST FOR INFORMATION NOT ADDRESSED IN THIS CCO REMAIN IN FORCE

MARK	DATE	DESCRIPTIONS	BY	CH'D	CCO#
1	10/23/13	ADDITIONAL SAS MISCELLANEOUS ELECTRICAL CHANGES	SAM	JZ	191S2
0	03/27/13	ADDITIONAL SAS MISCELLANEOUS ELECTRICAL CHANGES	SAM	RG	191S2

REVISIONS

CONTRACT CHANGE ORDER NO. 191 S2
SHEET 5 OF 40

DESIGN	BY S. Mohammed	CHECKED R. Garcia	
DETAILS	BY J. Fusco	CHECKED R. Garcia	
QUANTITIES	BY	CHECKED	

PREPARED FOR THE STATE OF CALIFORNIA DEPARTMENT OF TRANSPORTATION

Brady Nadell
PROJECT ENGINEER

BRIDGE NO. 34-0006
KILOMETER POST 13.2/13.9

SAS/SKYWAY SUPERSTRUCTURE

GIRDER CONDUIT/CABLE TRAY SUPPORT DETAIL - SHEET 3 OF 5 1

AS-35B

SHEET OF

DISREGARD PRINTS BEARING EARLIER REVISION DATES

REVISION DATES (PRELIMINARY STAGE ONLY)

ORIGINAL SCALE IN MILLIMETERS FOR REDUCED PLANS 0 10 20 30 40 50 60 70 80 90 100

CU 04251
EA 0120F1

FILE => 04-0120f1_086S39r01.dgn

DESIGN DETAIL SHEET (METRIC) (REV. 3/1/98)

T:\13103\US\pse\SAS Struc\CCO\SAS CC0191S2\2013.10.23_Draft 2 Submittal\04-0120f1_086S39r01.dgn

USERNAME => LLorico DATE PLOTTED => 21-OCT-2013 TIME PLOTTED => 16:54

DIST	COUNTY	ROUTE	KILOMETER POST TOTAL PROJECT	SHEET No	TOTAL SHEETS
04	SF	80	13.2/13.9	86 S40R1	1204

REGISTERED CIVIL ENGINEER 3/27/13

PLANS APPROVAL DATE

REGISTERED PROFESSIONAL ENGINEER SAFIUDDIN A. MOHAMMED No. 71694 CIVIL STATE OF CALIFORNIA

The State of California or its officers or agents shall not be responsible for the accuracy or completeness of electronic copies of this plan sheet.

Parsons Brinckerhoff Quade & Douglas, Inc.
303 Second Street, Suite 700N
San Francisco, CA 94107

Caltrans now has a web site! To get to the web site, go to: http://www.dot.ca.gov

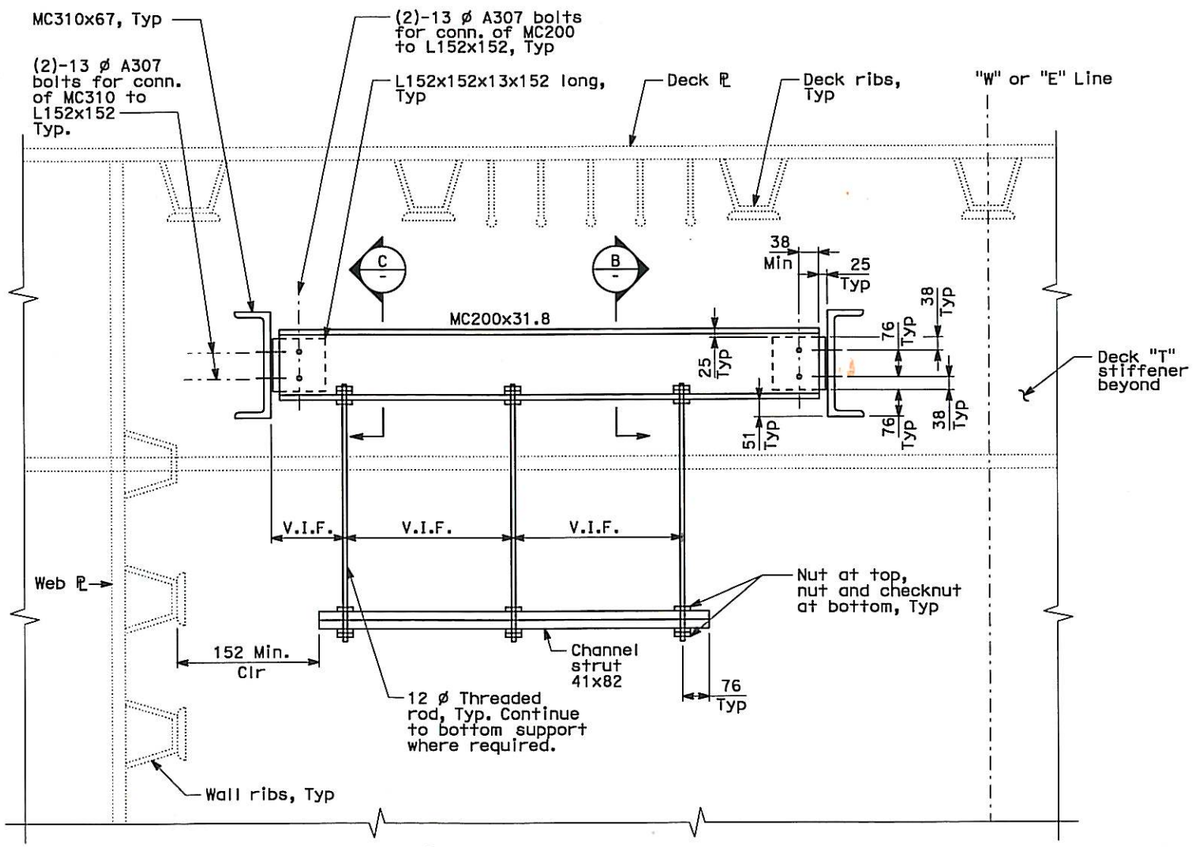

SECTION A-A
NO SCALE

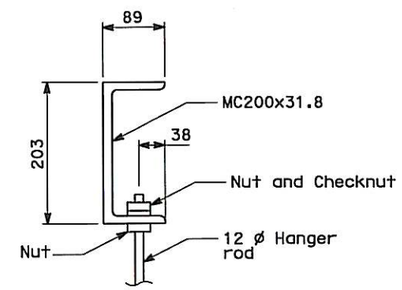

SECTION B-B
NO SCALE

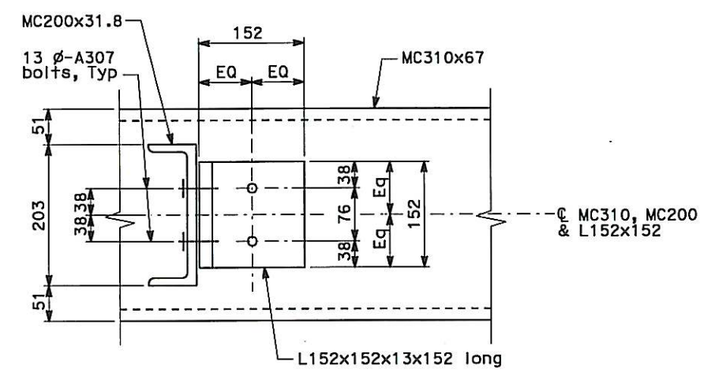

SECTION C-C
NO SCALE

NOTES:

1. See Electrical Plans for additional information
2. Cable trays/conduits not shown for clarity.
3. Seismic horizontal bracing not shown for clarity. See Electrical Plans.
4. Verify all dimensions in field.

REQUEST FOR INFORMATION NOT ADDRESSED IN THIS CCO REMAIN IN FORCE

MARK	DATE	DESCRIPTIONS	BY	CH'D	CCO#
1	10/23/13	ADDITIONAL SAS MISCELLANEOUS ELECTRICAL CHANGES	SAM	JZ	191S2
0	03/27/13	ADDITIONAL SAS MISCELLANEOUS ELECTRICAL CHANGES	SAM	RG	191S2

REVISIONS

CONTRACT CHANGE ORDER NO. 191 S2
SHEET 6 OF 40

ALL DIMENSIONS ARE IN MILLIMETERS UNLESS OTHERWISE SHOWN

	BY	CHECKED
DESIGN	S. Mohammed	R. Garcia
DETAILS	J. Fusco	R. Garcia
QUANTITIES		

PREPARED FOR THE STATE OF CALIFORNIA DEPARTMENT OF TRANSPORTATION

Brady Nadell
PROJECT ENGINEER

BRIDGE NO. 34-0006
KILOMETER POST 13.2/13.9

SAS/SKYWAY SUPERSTRUCTURE
GIRDER CONDUIT/CABLE TRAY SUPPORT DETAIL - SHEET 4 OF 5

AS-35C

DESIGN DETAIL SHEET (METRIC) (REV. 3/1/98)

ORIGINAL SCALE IN MILLIMETERS FOR REDUCED PLANS 0 10 20 30 40 50 60 70 80 90 100

CU 04251
EA 0120F1

DISREGARD PRINTS BEARING EARLIER REVISION DATES

REVISION DATES (PRELIMINARY STAGE ONLY) SHEET OF

FILE => 04-0120f1_086S40r01.dgn

T:\13103\MS\pse\SAS Struc\CCO\SAS CCO191S2\2013.10.23_Draft 2 Submittal\04-0120f1_086S40r01.dgn

USERNAME => LLorico DATE PLOTTED => 21-OCT-2013 TIME PLOTTED => 16:54

DIST	COUNTY	ROUTE	KILOMETER POST TOTAL PROJECT	SHEET No	TOTAL SHEETS
04	SF	80	13.2/13.9	86 S41	1204

REGISTERED CIVIL ENGINEER 10/09/13

PLANS APPROVAL DATE

REGISTERED PROFESSIONAL ENGINEER SAFIUDDIN A. MOHAMMED No. 71894 CIVIL STATE OF CALIFORNIA

The State of California or its officers or agents shall not be responsible for the accuracy or completeness of electronic copies of this plan sheet.

Parsons Brinckerhoff Quade & Douglas, Inc.
303 Second Street, Suite 700N
San Francisco, CA 94107

Caltrans now has a web site! To get to the web site, go to: http://www.dot.ca.gov

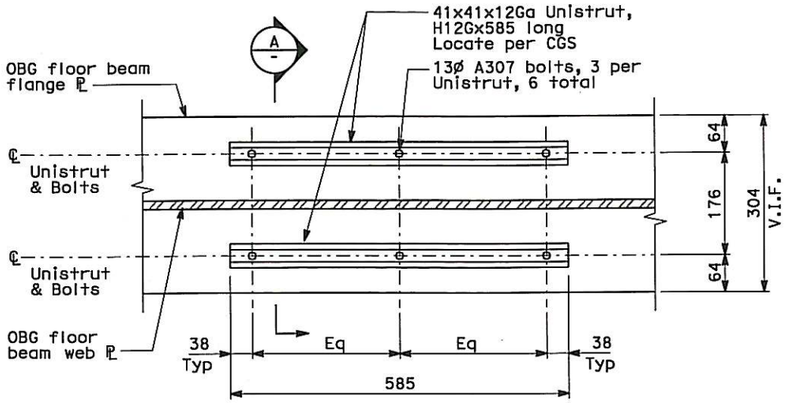

STRONG MOTION SENSOR ENCLOSURE INSIDE OBG @ PP 127.5

SCALE: 1:10

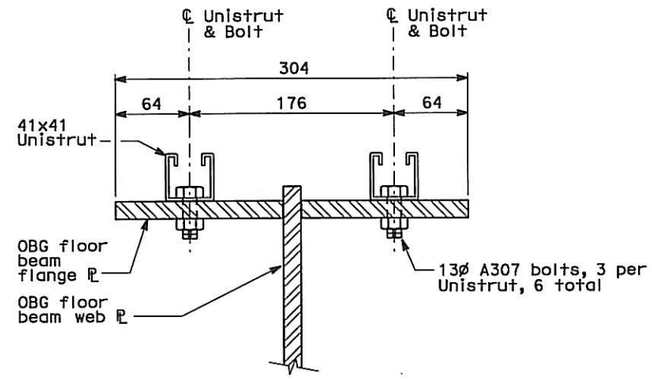

A SECTION

SCALE: 1:5

NOTES:

1. Contractor shall ensure all embedded anchors are aligned along a straight vertical line. Embedded anchors shall not conflict with Saddle Assembly, PT ducts pr concrete jacket wall reinforcement.
2. All embedded anchors and channel struts shall be hot-dipped galvanized.
3. Connection at concrete jacket wall is shown, connection at soffit beam is similar.
4. Pull box shall be attached to horizontal channel struts using strut channel spring nut, lockwasher and hex bolt.

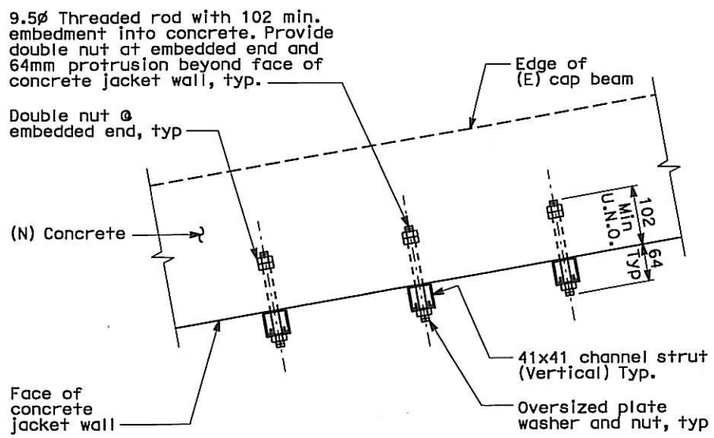

EMBEDDED ANCHOR AND VERTICAL CONDUIT SUPPORT CHANNEL STRUT CONNECTION DETAIL

SCALE: 1:10

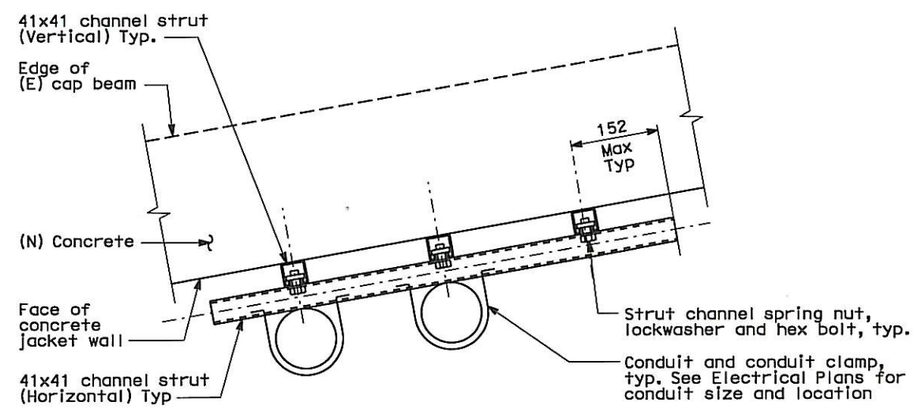

HORIZONTAL CONDUIT SUPPORT CHANNEL STRUT AND CONDUIT ATTACHMENT DETAIL

SCALE: 1:10

REQUEST FOR INFORMATION NOT ADDRESSED IN THIS CCO REMAIN IN FORCE

MARK	DATE	DESCRIPTIONS	BY	CH'D	CCO#
0	10/28/13	ADDITIONAL SAS MISCELLANEOUS ELECTRICAL CHANGES	SAM	JZ	191S2

REVISIONS

CONTRACT CHANGE ORDER NO. 191 S2
SHEET 7 OF 40

ALL DIMENSIONS ARE IN MILLIMETERS UNLESS OTHERWISE SHOWN

	BY	CHECKED
DESIGN	S. Mohammed	J. Zandian
DETAILS	E. Llorico	J. Zandian
QUANTITIES		

PREPARED FOR THE STATE OF CALIFORNIA DEPARTMENT OF TRANSPORTATION

Brady Nadell
PROJECT ENGINEER

BRIDGE NO. 34-0006
KILOMETER POST 13.2/13.9

SAS/SKYWAY SUPERSTRUCTURE

GIRDER CONDUIT/CABLE TRAY SUPPORT DETAIL - SHEET 5 OF 5

AS-35D

DESIGN DETAIL SHEET (METRIC) (REV. 3/1/98)

ORIGINAL SCALE IN MILLIMETERS FOR REDUCED PLANS 0 10 20 30 40 50 60 70 80 90 100

CU 04251
EA 0120F1

DISREGARD PRINTS BEARING EARLIER REVISION DATES

REVISION DATES (PRELIMINARY STAGE ONLY) SHEET OF

FILE => 04-0120f1_086S41.dgn

T:\13103\MS\pse\SAS Struc\CCO\SAS CCO19152\2013.10.28_Draft 3 Submittal\04-0120f1_086S41.dgn

USERNAME => LlorIco DATE PLOTTED => 28-OCT-2013 TIME PLOTTED => 17:43

DIST	COUNTY	ROUTE	KILOMETER POST TOTAL PROJECT	SHEET No	TOTAL SHEETS
04	SF	80	13.2/13.9	104 S3R3	1204

REGISTERED ELECTRICAL ENGINEER 2/22/08 DATE

PLANS APPROVAL DATE

PB AMERICAS, Inc.
A Parsons Brinckerhoff Company
303 Second St., Suite 700N
San Francisco, CA 94107-1317

REGISTERED PROFESSIONAL ENGINEER S. A. ESTOQUE, JR. No. E-10151 Exp. 12/31/2008 ELECTRICAL STATE OF CALIFORNIA

The State of California or its officers or agents shall not be responsible for the accuracy or completeness of electronic copies of this plan sheet.

Caltrans now has a web site! To get to the web site, go to http://www.dot.ca.gov

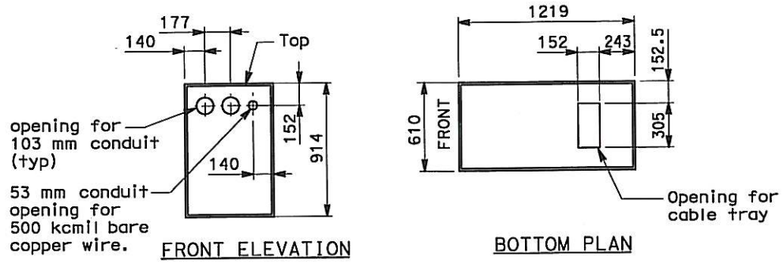

12.47 KV PULL BOX A1 (1)(2)(3)

TOP ACCESS
SCALE 1:20

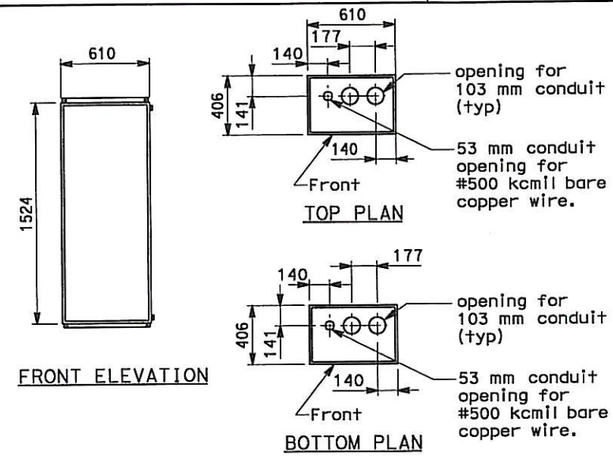

12.47 KV PULL BOX B1 (1)(2)(3)

FRONT ACCESS
SCALE 1:20

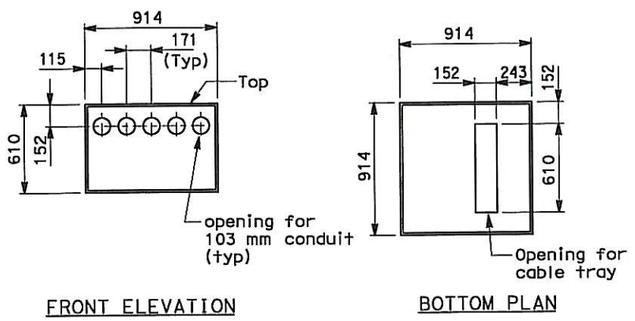

NON-CALTRANS PULL BOX A5 (1)(2)(3)

(FOR TOS/COM PULL BOX A4)
TOP ACCESS
SCALE 1:20

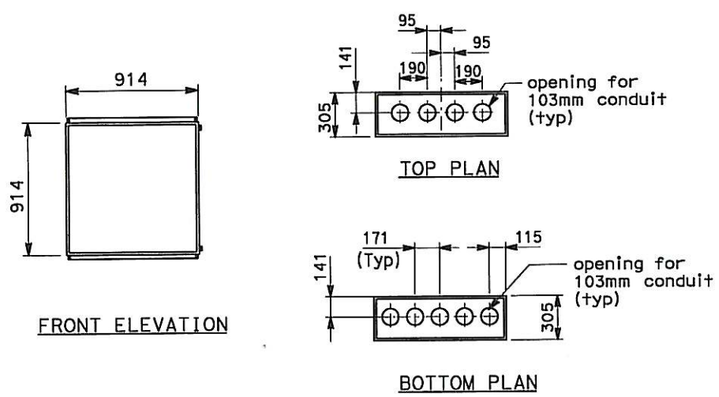

NON-CALTRANS PULL BOX B5 (1)(2)(3)

(FOR 600 V PULL BOX B2)
(FOR 600 V PULL BOX B3)
(FOR TOS/COM PULL BOX B4)
FRONT ACCESS
SCALE 1:20

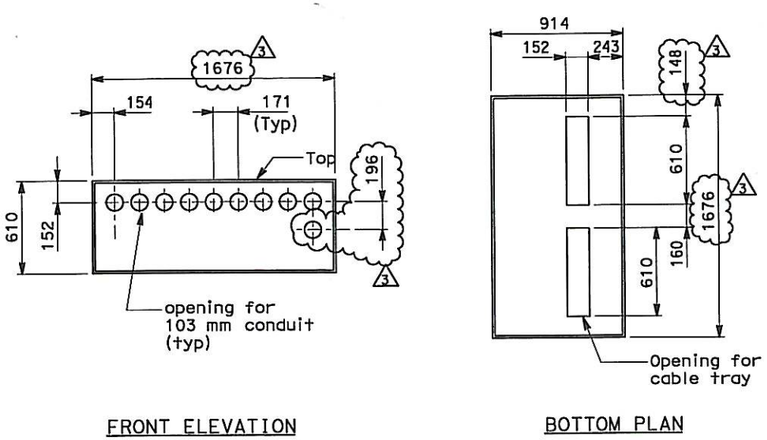

600V PULL BOX A23 (1)(2)(3)

3
TOP ACCESS
SCALE 1:20

REGISTERED PROFESSIONAL ENGINEER DAVID H. OTO No. 10699 Exp. 06/30/2015 ELECTRICAL STATE OF CALIFORNIA
FOR REVISION ONLY 3

REGISTERED PROFESSIONAL ENGINEER SYN YEE CHIN No. 18186 Exp. 09/30/2013 ELECTRICAL STATE OF CALIFORNIA
FOR REVISION ONLY 2

REGISTERED PROFESSIONAL ENGINEER FADI WALIEDDINE No. 11465 Exp. 12/31/2009 ELECTRICAL STATE OF CALIFORNIA
FOR REVISION ONLY 1

NOTES:

1. Pull Box shall be fabricated of Nema 4X stainless steel, type 304.
2. Provide pad lock for each pull box.
3. Provide nameplate description.

SHEET NOTES:

(1) For pull box location see drawings E-21, E-21A, E-21B & E-21F.
(2) Contractor shall verify all the dimensions prior to start work.
(3) Provide breather and drain fitting at the bottom of each pull box.

REQUEST FOR INFORMATION NOT ADDRESSED IN THIS CCO REMAIN IN FORCE

MARK	DATE	DESCRIPTIONS	BY	CH'D	CCO#
3	10/23/13	ADDITIONAL SAS MISCELLANEOUS ELECTRICAL CHANGES	RR	RG	191S2
2	05/25/12	SAS/SKYWAY MISCELLANEOUS ELECTRICAL CHANGES	TW	RG	191
1	11/20/09	ELECTRICAL GROUNDING	RR	RG FW	75
0	02/25/08	CABLE TRAY CHANGES	TW	RG SE	42S1

REVISIONS

CONTRACT CHANGE ORDER NO. 191 S2
SHEET 8 OF 40

DETAILS
UNDERGROUND
PIER W2E PLANS AND SECTIONS

SCALE AS NOTED

E-21C

DESIGN OVERSIGHT	CALCULATED/DESIGNED BY	TW	DATE 7/07	REVISED BY	DATE REVISED
BEHZAD GOLEMOHAMMADI	CHECKED BY	EL	7/07		

STATE OF CALIFORNIA - DEPARTMENT OF TRANSPORTATION

Caltrans

LAST REVISION 10-23-13 | DATE PLOTTED => 21-OCT-2013 | TIME PLOTTED => 16:51

THIS PLAN IS ACCURATE FOR ELECTRICAL WORK ONLY.

ALL DIMENSIONS ARE IN MILLIMETERS UNLESS OTHERWISE SHOWN.

FOR REDUCED PLANS ORIGINAL SCALE IS IN MILLIMETERS 0 20 40 60 80

DGN FILE =>04-0120F1_0104S03R03.dgn
USERNAME =>Llorico

CU 04251 | EA 0120F1

DIST	COUNTY	ROUTE	KILOMETER POST TOTAL PROJECT	SHEET NO	TOTAL SHEETS
04	SF	80	13.2/13.9	104 S4R3	1204

REGISTERED ELECTRICAL ENGINEER — DATE 2/22/08

REGISTERED PROFESSIONAL ENGINEER S. A. ESTOQUE, JR. No. E-10151 Exp. 12/31/2008 ELECTRICAL STATE OF CALIFORNIA

PLANS APPROVAL DATE

PB AMERICAS, Inc.
A Parsons Brinckerhoff Company
303 Second St., Suite 700N
San Francisco, CA 94107-1317

The State of California or its officers or agents shall not be responsible for the accuracy or completeness of electronic copies of this plan sheet.

Caltrans now has a web site! To get to the web site, go to http://www.dot.ca.gov

Caltrans Metric

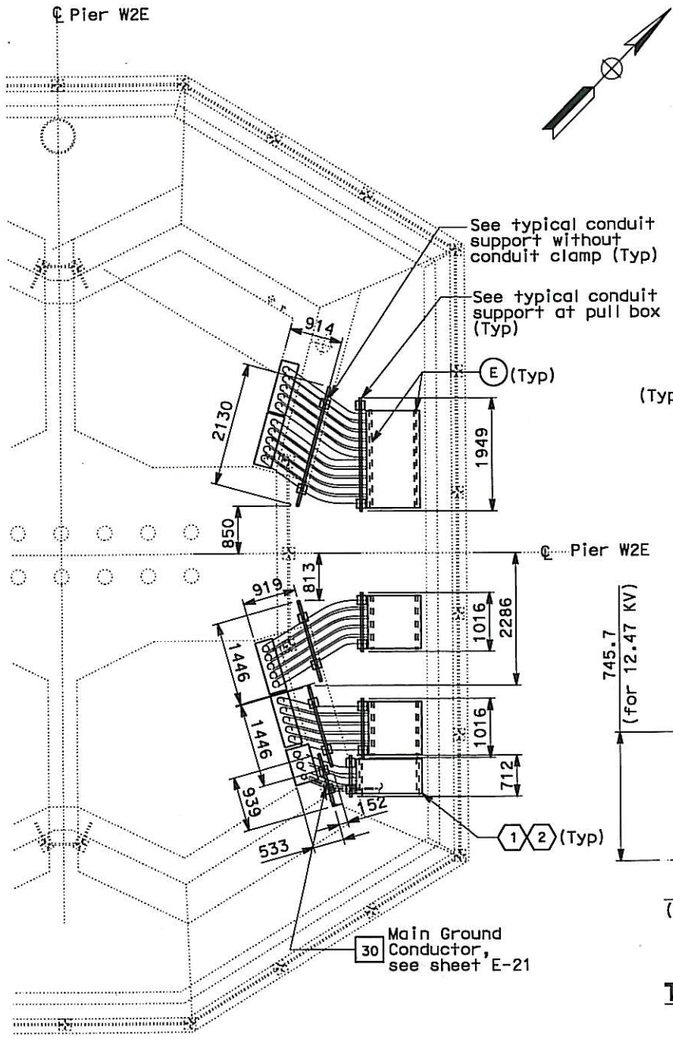

CONDUIT SUPPORT AT GRADE

PLAN AT PIER W2E
SCALE 1:50

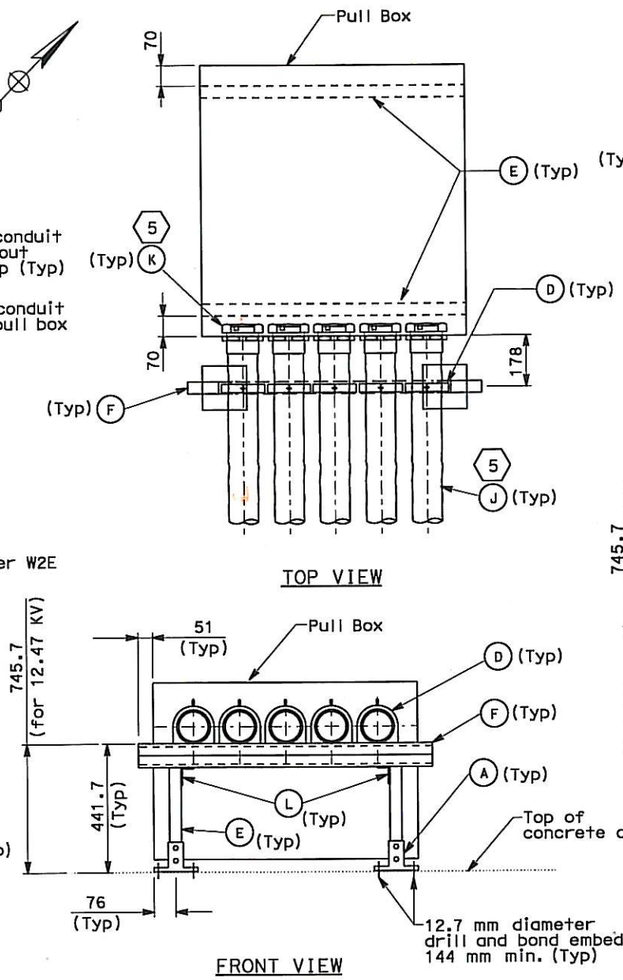

TYPICAL CONDUIT SUPPORT AT PULL BOX

NO SCALE

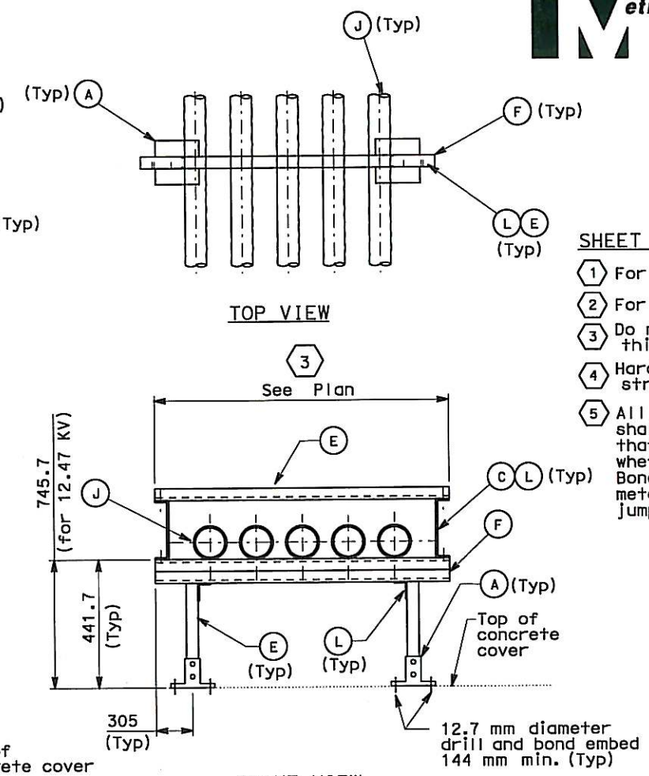

TYPICAL CONDUIT SUPPORT WITHOUT CONDUIT CLAMP

NO SCALE

SHEET NOTES:

1. For pull box sizes and opening see E-21C.
2. For pull box location see E-21.
3. Do not secure flexible conduit at this location.
4. Hardwares and components are for strut channels.
5. All liquidtight flexible metal conduit (LFMC) shall have #2 AWG bare copper wire inside that bonded to the grounding bushing whether shown on the drawings or not. Bond conduit bushings together and to the metallic enclosures. For similar bonding jumpers, see Detail 7, sheet E-196A.

MATERIAL LIST

	Item No.	Description
(4)	(A)	Strut Post Base 152 mm x 152 mm.
	(B)	Not used
(4)	(C)	Strut channel spring nut, lockwasher and hex bolt (41mm)
(4)	(D)	Strut channel conduit clamp for 103 mm
(4)	(E)	Strut channel 41 mm x 41 mm
(4)	(F)	Double strut channel 41.3 mm x 82.6 mm
	(G)	Not used
	(H)	Not used
	(J)	Liquidtight flexible metal conduit, 103 mm
	(K)	Liquidtight Insulated flexible metal conduit connector with insulated grounding bushing for 103 mm conduit
(4)	(L)	203 mm U-shape fitting

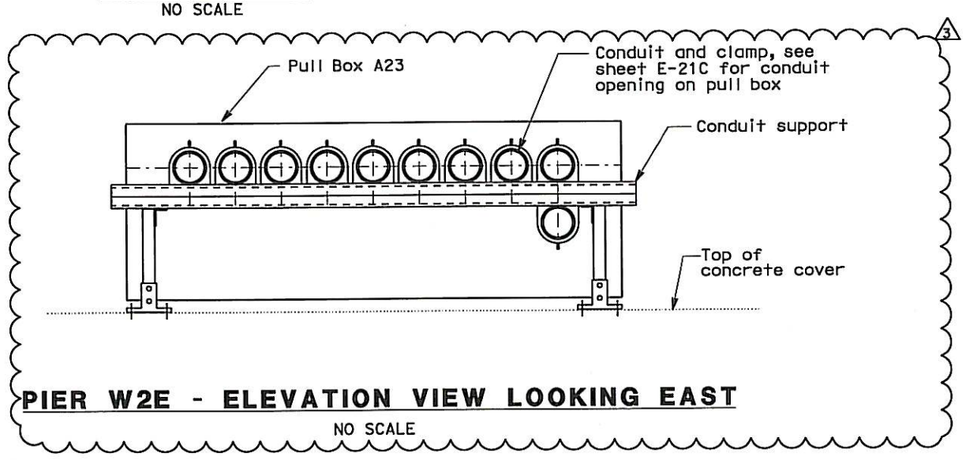

PIER W2E - ELEVATION VIEW LOOKING EAST

NO SCALE

REGISTERED PROFESSIONAL ENGINEER FADI WALIEDDINE No. 11465 Exp. 12/31/2009 ELECTRICAL STATE OF CALIFORNIA — FOR REVISION ONLY (1)

REGISTERED PROFESSIONAL ENGINEER SYN YEE CHIN No. 18186 Exp. 09/30/2013 ELECTRICAL STATE OF CALIFORNIA — FOR REVISION ONLY (2)

REGISTERED PROFESSIONAL ENGINEER DAVID H. OTO No. 10699 Exp. 06/30/2015 ELECTRICAL STATE OF CALIFORNIA — FOR REVISION ONLY (3)

REQUEST FOR INFORMATION NOT ADDRESSED IN THIS CCO REMAIN IN FORCE

MARK	DATE	DESCRIPTIONS	BY	CH'D	CCO#
3	10/23/13	ADDITIONAL SAS MISCELLANEOUS ELECTRICAL CHANGES	RR RSB	RG	191S2
2	05/25/12	SAS/SKYWAY MISCELLANEOUS ELECTRICAL CHANGES	TW	RG	191
1	11/20/09	ELECTRICAL GROUNDING	RR AWG	RG FW	75
0	02/25/08	CABLE TRAY CHANGES	TW	RG SE	42S1

REVISIONS

CONTRACT CHANGE ORDER NO. 191 S2
SHEET 9 OF 40

DETAILS
UNDERGROUND
PIER W2E PLANS AND SECTIONS

SCALE AS NOTED

E-21D

STATE OF CALIFORNIA - DEPARTMENT OF TRANSPORTATION — Caltrans

DESIGN OVERSIGHT: BEHZAD GOLEMOHAMMADI

CALCULATED/DESIGNED BY: TW — DATE 07/07 — REVISED BY
CHECKED BY: EJL — DATE 07/07 — DATE REVISED

LAST REVISION 10-23-13 — DATE PLOTTED => 21-OCT-2013 — TIME PLOTTED => 17:18

THIS PLAN IS ACCURATE FOR ELECTRICAL WORK ONLY.

ALL DIMENSIONS ARE IN MILLIMETERS UNLESS OTHERWISE SHOWN.

FOR REDUCED PLANS ORIGINAL SCALE IS IN MILLIMETERS 0 20 40 60 80

DGN FILE =>04-0120F1_0104S04R03.dgn
USERNAME =>Liorico

CU 04251 — EA 0120F1

DIST	COUNTY	ROUTE	KILOMETER POST TOTAL PROJECT	SHEET No	TOTAL SHEETS
04	SF	80	13.2/13.9	105 R5	1204

REGISTERED ELECTRICAL ENGINEER 12/19/02 DATE

12-6-04
PLANS APPROVAL DATE

REGISTERED PROFESSIONAL ENGINEER JENS ERLINGSSON No. 8249 Exp. 9/30/06 ELECTRICAL STATE OF CALIFORNIA

PB AMERICAS, Inc.
A Parsons Brinckerhoff Company
303 Second St., Suite 700N
San Francisco, CA 94107-1317

The State of California or its officers or agents shall not be responsible for the accuracy or completeness of electronic copies of this plan sheet.

Caltrans now has a web site! To get to the web site, go to http://www.dot.ca.gov

Caltrans Metric

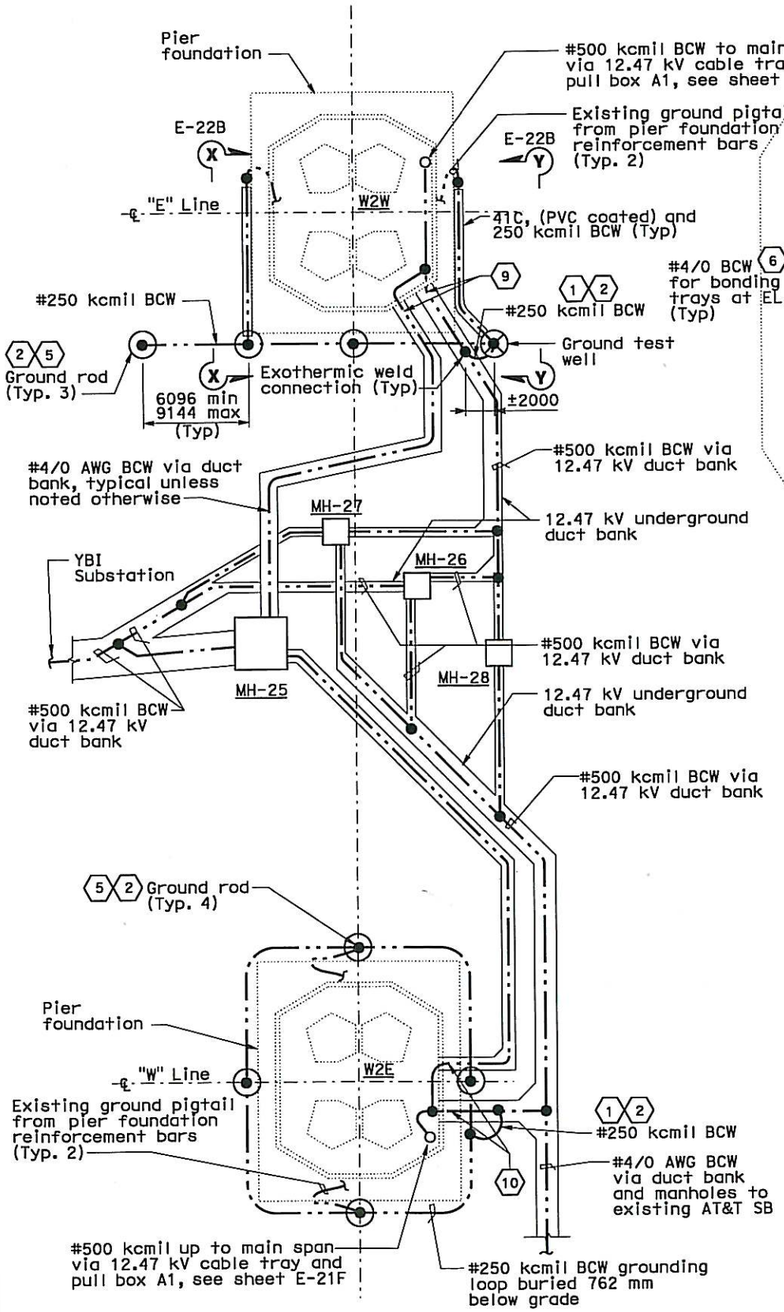

PIER W2 FOUNDATION PLAN (11)

DETAIL 1

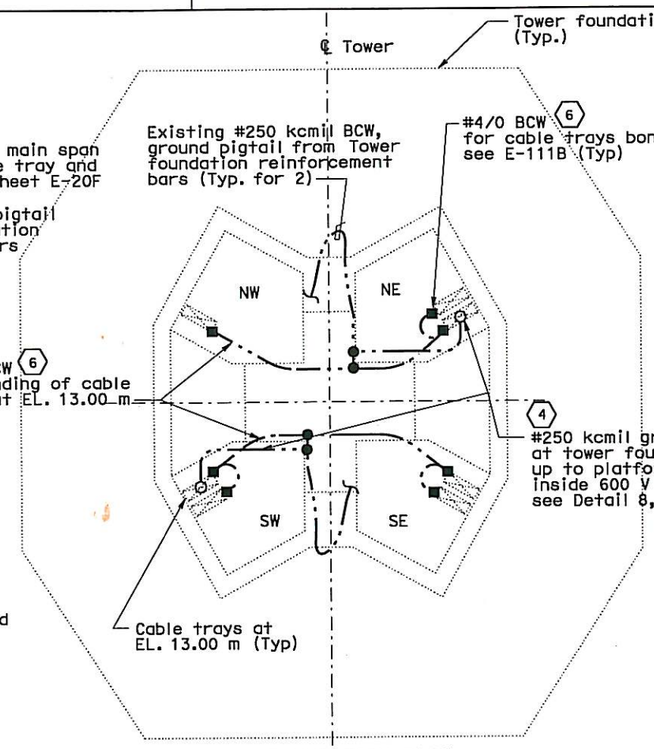

TOWER FOUNDATION PLAN

DETAIL 2

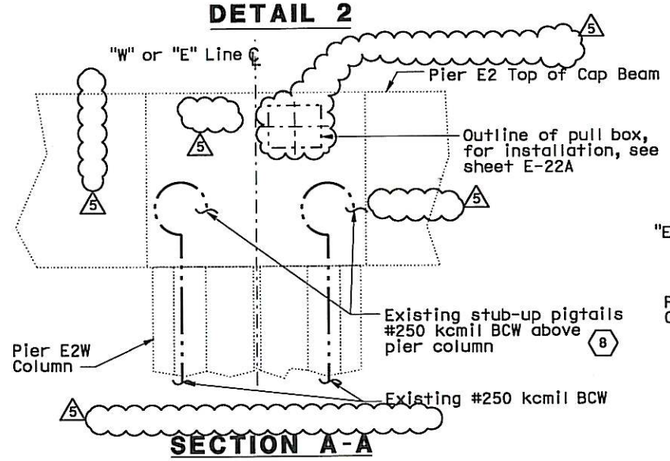

SECTION A-A

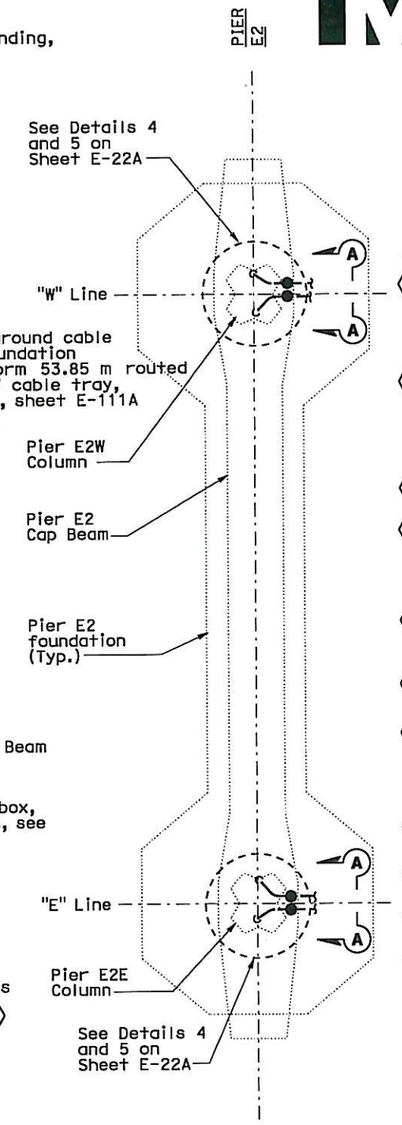

PIER E2 FOUNDATION PLAN

DETAIL 3

SHEET NOTES:

1. Tie the underground duct bank #500 kcmil Bare Copper Wire (BCW) system grounding conductor to the W2E and W2W pier foundations. See W2 contract 04-0120C4 for limited scope of work.
2. Route the #250 kcmil grounding conductors around the W2W and connect to the new grounding rods. This grounding loop shall be exothermically connected to the #500 kcmil main ground conductor at the pier. This is typical for pier W2E.
3. Not used.
4. Main tower foundation ground conductors shall be routed vertically up to platform 53.85 m via 600V cable trays inside SW and NE tower quadrants and tied exothermically to the #500 kcmil main ground conductor.
5. Ground rod shall be copper clad, 19 mm diameter and 3048 mm long.
6. Bond all the cable trays to the ground loop at Tower elevation 13 m.
7. Deleted
5
8. For connection of stub-up #250 kcmil BCW to grounding plates, see sheet E-22A.
9. See Detail 1, sheet E-22B for grounding installation through pier pit wall.
10. See Detail 2, sheet E-22B for grounding installation through pier pit wall.
11. Pier grounding system must be verified and tested for ground resistance prior to tie-in to #500 kcmil main ground conductor. Perform tests, by the fall-of-potential method according to IEEE-81. Contractor shall submit a test plan and procedure for Engineer's approval. Test results shall be submitted to the Engineer for evaluation and approval.

ORIGINAL SHEET SUPERCEDED

REQUEST FOR INFORMATION NOT ADDRESSED IN THIS CCO REMAIN IN FORCE

MARK	DATE	DESCRIPTIONS	BY	CH'D	CCO#
5	10/23/13	ADDITIONAL SAS MISCELLANEOUS ELECTRICAL CHANGES	RR RSB	RG	191S2
4	04/27/12	ELECTRICAL GROUNDING	RSB	RG	75
3	12/12/11	W2 DUCT BANKS REINFORCEMENT	TW	RG	205
2	08/08/11	W2 DUCT BANKS REINFORCEMENT	TW	RG	205
1	11/20/09	ELECTRICAL GROUNDING	RR AWG	RG FE	75

REVISIONS

CONTRACT CHANGE ORDER NO. 191 S2
SHEET 10 OF 40

REGISTERED PROFESSIONAL ENGINEER FADI WALIEDDINE No. 11465 Exp. 12/31/2009 ELECTRICAL STATE OF CALIFORNIA
FOR REVISION ONLY 1

REGISTERED PROFESSIONAL ENGINEER DAVID H. OTO No. 10699 Exp. 06/30/2015 ELECTRICAL STATE OF CALIFORNIA
FOR REVISION ONLY 2 3 4 5

DETAILS
UNDERGROUND FOUNDATION GROUNDING
NO SCALE

E-22

STATE OF CALIFORNIA - DEPARTMENT OF TRANSPORTATION
Caltrans

DESIGN OVERSIGHT: BEHZAD GOLEMOHAMMADI
CALCULATED/DESIGNED BY: KG | DATE: 11/01 | REVISED BY
CHECKED BY: PF | 12/01 | DATE REVISED

LAST REVISION 10-23-13
DATE PLOTTED => 21-OCT-2013
TIME PLOTTED => 16:51

THIS PLAN ACCURATE FOR ELECTRICAL WORK ONLY.
ALL DIMENSIONS ARE IN MILLIMETERS UNLESS OTHERWISE SHOWN
FOR REDUCED PLANS ORIGINAL SCALE IS IN MILLIMETERS 0 20 40 60 80

DGN FILE =>04-0120f1_0105R05.dgn
USERNAME =>Llorico

CU 04251 | EA 0120F1

DIST	COUNTY	ROUTE	KILOMETER POST TOTAL PROJECT	SHEET No	TOTAL SHEETS
04	SF	80	13.2/13.9	105 S1R1	1204

REGISTERED ELECTRICAL ENGINEER 8/11/08 DATE

PLANS APPROVAL DATE

REGISTERED PROFESSIONAL ENGINEER FADI WALIEDDINE No. 11465 Exp. 12/31/2009 ELECTRICAL STATE OF CALIFORNIA

PB AMERICAS, Inc.
A Parsons Brinckerhoff Company
303 Second St., Suite 700N
San Francisco, CA 94107-1317

The State of California or its officers or agents shall not be responsible for the accuracy or completeness of electronic copies of this plan sheet.

Caltrans now has a web site! To get to the web site, go to http://www.dot.ca.gov

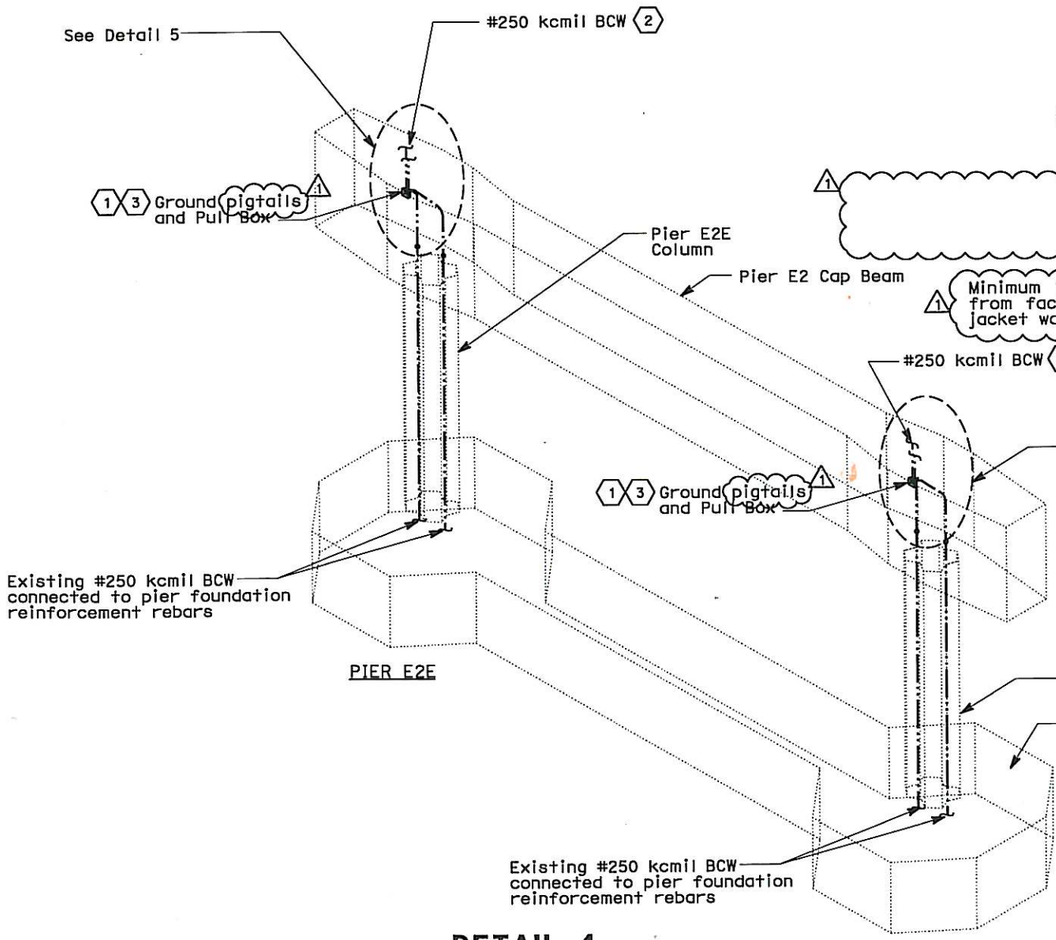

DETAIL 4

(1) Concrete jacket wall around cap beam not shown for clarity

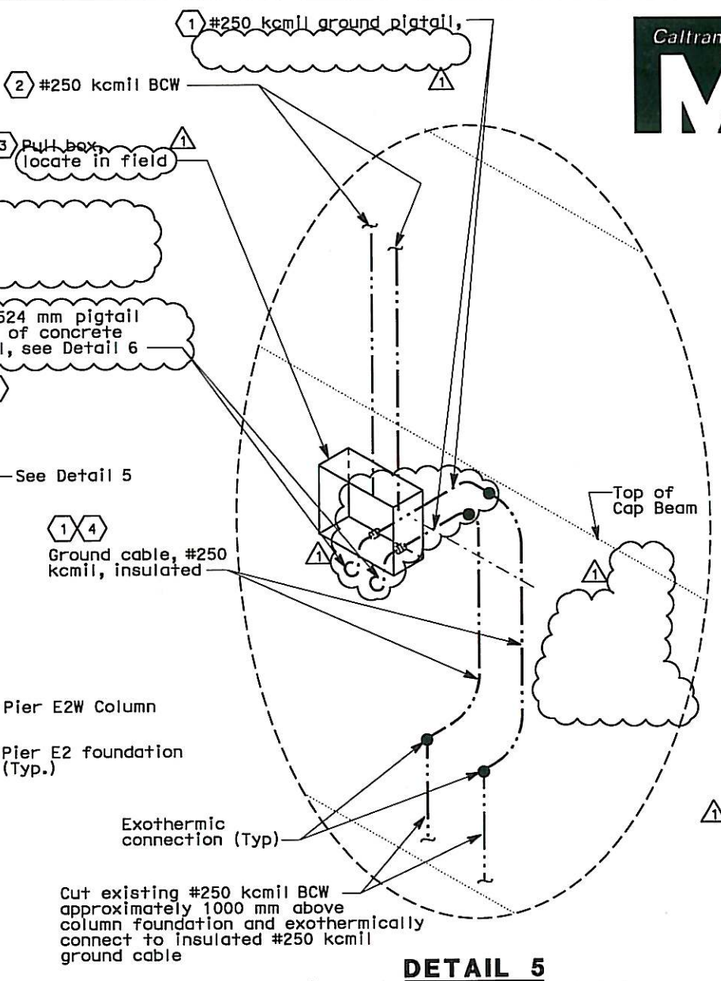

DETAIL 5

(1) Concrete jacket wall around cap beam not shown for clarity

NOTES:

(1) Cut-off existing ground plates and exothermically connect #250 kcmil BCW pigtail cables (2 per column) to the existing #250 kcmil BCW that are stub-up above the pier column. Route theground cable within the cap beam avoiding any interference with E2 shear key saddle assembly or PT ducts. Secure cable to inside of vertical rebar cage. Contractor to verify ground cable length to suit field condition.

(2) Enclose the #250 kcmil BCW in liquidtight flexible metal conduit when routing up to OBG for connection to #500 kcmil main ground conductor. Typical for Westbound and Eastbound, see sheets E-111 and E-196 respectively.

(3) Pull box shall be 305 x 305 x 154 stainless steel NEMA 4X enclosure, Hoffman #A-1212CHNFSS6 or equal. Box shall be mounted to face of concrete jacket wall. Place Neoprene gasket between box and concrete face to inhibit moisture encrosion.

(4) Seal exposed bare copper wire (BCW) and exothermic connections with heavy duty splicing tape and vinyl electrical tape.

(1)(5) Conduit and threaded coupler shall be located to avoid any interference with PT ducts, jacket wall reinforcement or other embedded structural elements.

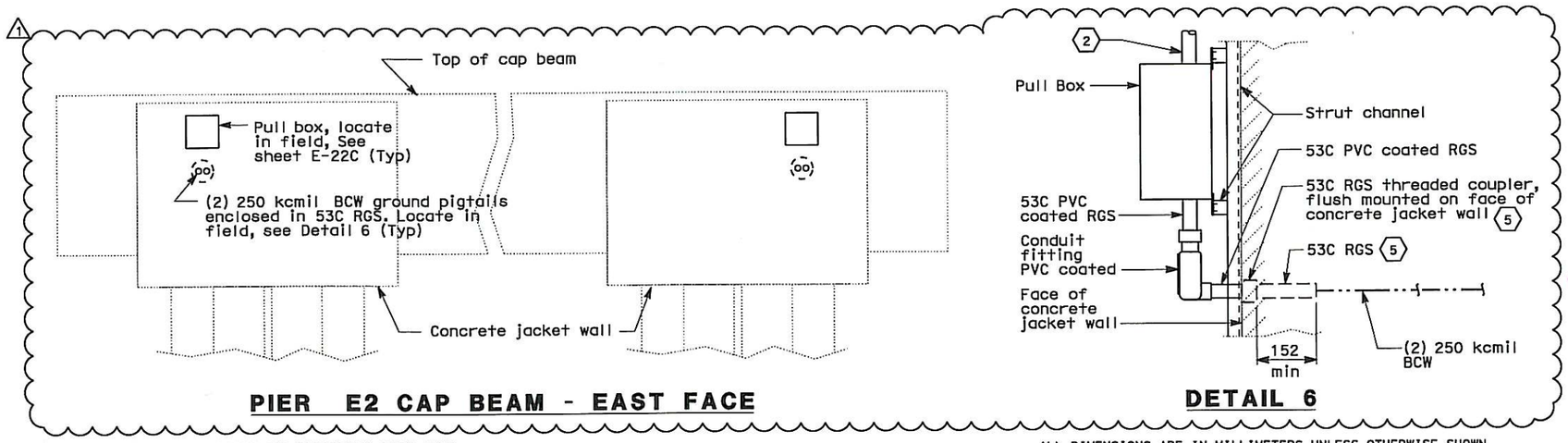

PIER E2 CAP BEAM - EAST FACE

DETAIL 6

REGISTERED PROFESSIONAL ENGINEER DAVID H. OTO No. 10699 Exp. 06/30/2015 ELECTRICAL STATE OF CALIFORNIA

FOR REVISION ONLY (1)

REQUEST FOR INFORMATION NOT ADDRESSED IN THIS CCO REMAIN IN FORCE

MARK	DATE	DESCRIPTIONS	BY	CH'D	CCO#
1	10/23/13	ADDITIONAL SAS MISCELLANEOUS ELECTRICAL CHANGES	RR RSB	RG	191S2
0	11/20/09	ELECTRICAL GROUNDING	RR AWG	RG FW	75

REVISIONS

CONTRACT CHANGE ORDER NO. 191 S2
SHEET 11 OF 40

DETAILS
UNDERGROUND FOUNDATION GROUNDING
NO SCALE

E-22A

THIS PLAN ACCURATE FOR ELECTRICAL WORK ONLY.

ALL DIMENSIONS ARE IN MILLIMETERS UNLESS OTHERWISE SHOWN

FOR REDUCED PLANS ORIGINAL SCALE IS IN MILLIMETERS 0 20 40 60 80

DGN FILE =>04-0120F1_0105S01R01.dgn
USERNAME =>Liorico

CU 04251 | EA 0120F1

STATE OF CALIFORNIA - DEPARTMENT OF TRANSPORTATION
Caltrans

DESIGN OVERSIGHT: BEHZAD GOLEMOHAMMADI

CALCULATED/DESIGNED BY | CHECKED BY | AWG | RG | DATE 8/08 | 8/08 | REVISED BY | DATE REVISED

LAST REVISION 10-23-13 | DATE PLOTTED => 23-OCT-2013 | TIME PLOTTED => 08:51

DIST	COUNTY	ROUTE	KILOMETER POST TOTAL PROJECT	SHEET No	TOTAL SHEETS
04	SF	80	13.2/13.9	105 S03	1204

REGISTERED ELECTRICAL ENGINEER 10/23/13 DATE

PLANS APPROVAL DATE

REGISTERED PROFESSIONAL ENGINEER DAVID H. OTO No. 10699 Exp. 06/30/2015 ELECTRICAL STATE OF CALIFORNIA

PB AMERICAS, Inc.
A Parsons Brinckerhoff Company
303 Second St., Suite 700N
San Francisco, CA 94107-1317

The State of California or its officers or agents shall not be responsible for the accuracy or completeness of electronic copies of this plan sheet.

Caltrans now has a web site! To get to the web site, go to http://www.dot.ca.gov

Caltrans Metric

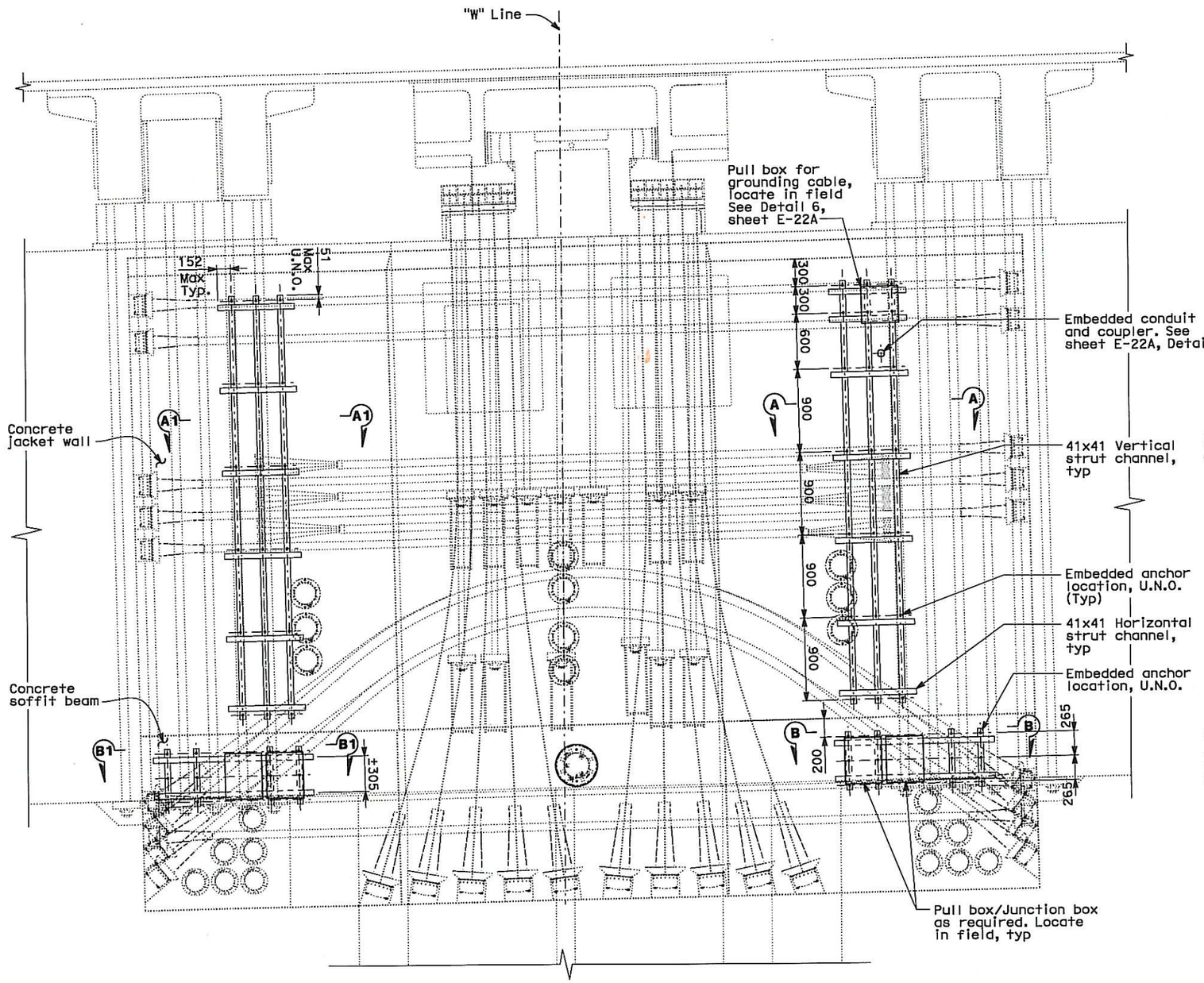

PIER E2 ELEVATION (1)

EAST FACE - LOOKING WEST, "W" LINE STATION
"E" LINE, SIMILAR

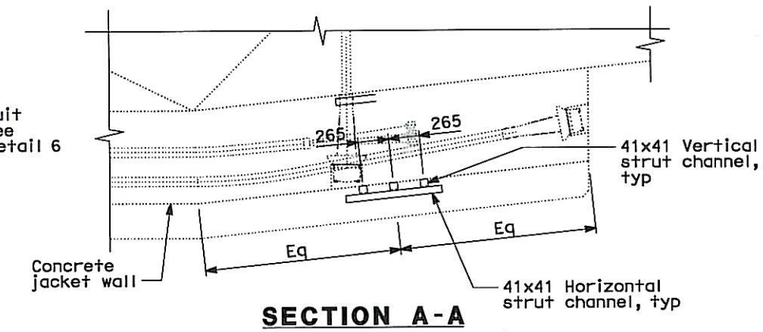

SECTION A-A

(SECTION A1-A1 OPPOSITE HAND)

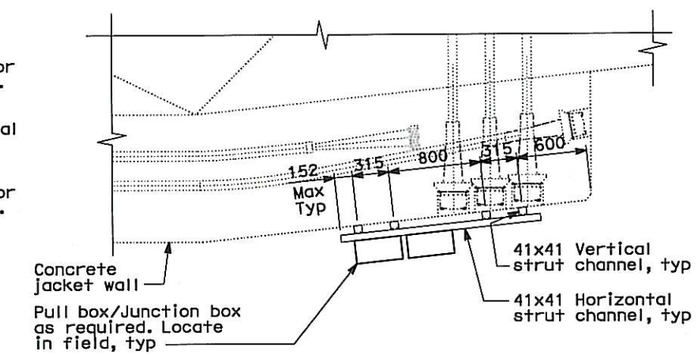

SECTION B-B

(SECTION B1-B1 OPPOSITE HAND)

SHEET NOTES:

(1) Dimensions are measured along lines perpendicular to the top face of Pier E2.

NOTES:

1. All embedded anchors and channel struts shall be hot-dipped galvanized.

REQUEST FOR INFORMATION NOT ADDRESSED IN THIS CCO REMAIN IN FORCE

MARK	DATE	DESCRIPTIONS	BY	CH'D	CCO#
0	10/28/13	ADDITIONAL SAS MISCELLANEOUS ELECTRICAL CHANGES	RG	DO	191S2

REVISIONS

CONTRACT CHANGE ORDER NO. 191S2
SHEET 12 OF 40

DETAILS
UNDERGROUND FOUNDATION GROUNDING

NO SCALE

E-22C

STATE OF CALIFORNIA - DEPARTMENT OF TRANSPORTATION	DESIGN OVERSIGHT	CALCULATED/DESIGNED BY	RG
Caltrans	BEHZAD GOLEMOHAMMADI	CHECKED BY	DO

REVISED BY	DATE	DATE REVISED

LAST REVISION 10-28-13 | DATE PLOTTED => 29-OCT-2013 | TIME PLOTTED => 09:31

THIS PLAN ACCURATE FOR ELECTRICAL WORK ONLY.

ALL DIMENSIONS ARE IN MILLIMETERS UNLESS OTHERWISE SHOWN

FOR REDUCED PLANS ORIGINAL SCALE IS IN MILLIMETERS 0 20 40 60 80

DGN FILE =>04-0120F1_0105S03.dgn
USERNAME =>Llorica

CU 04251 | EA 0120F1

DIST	COUNTY	ROUTE	KILOMETER POST TOTAL PROJECT	SHEET No	TOTAL SHEETS
04	SF	80	13.2/13.9	150 R3	1204

REGISTERED ELECTRICAL ENGINEER 12/19/02 DATE

12-6-04
PLANS APPROVAL DATE

REGISTERED PROFESSIONAL ENGINEER JENS ERLINGSSON No. 8249 Exp. 9/30/06 ELECTRICAL STATE OF CALIFORNIA

PB POWER, Inc.
A Parsons Brinckerhoff Company
303 Second St., Suite 700N
San Francisco, CA 94107-1317

The State of California or its officers or agents shall not be responsible for the accuracy or completeness of electronic copies of this plan sheet.

Caltrans now has a web site! To get to the web site, go to http://www.dot.ca.gov

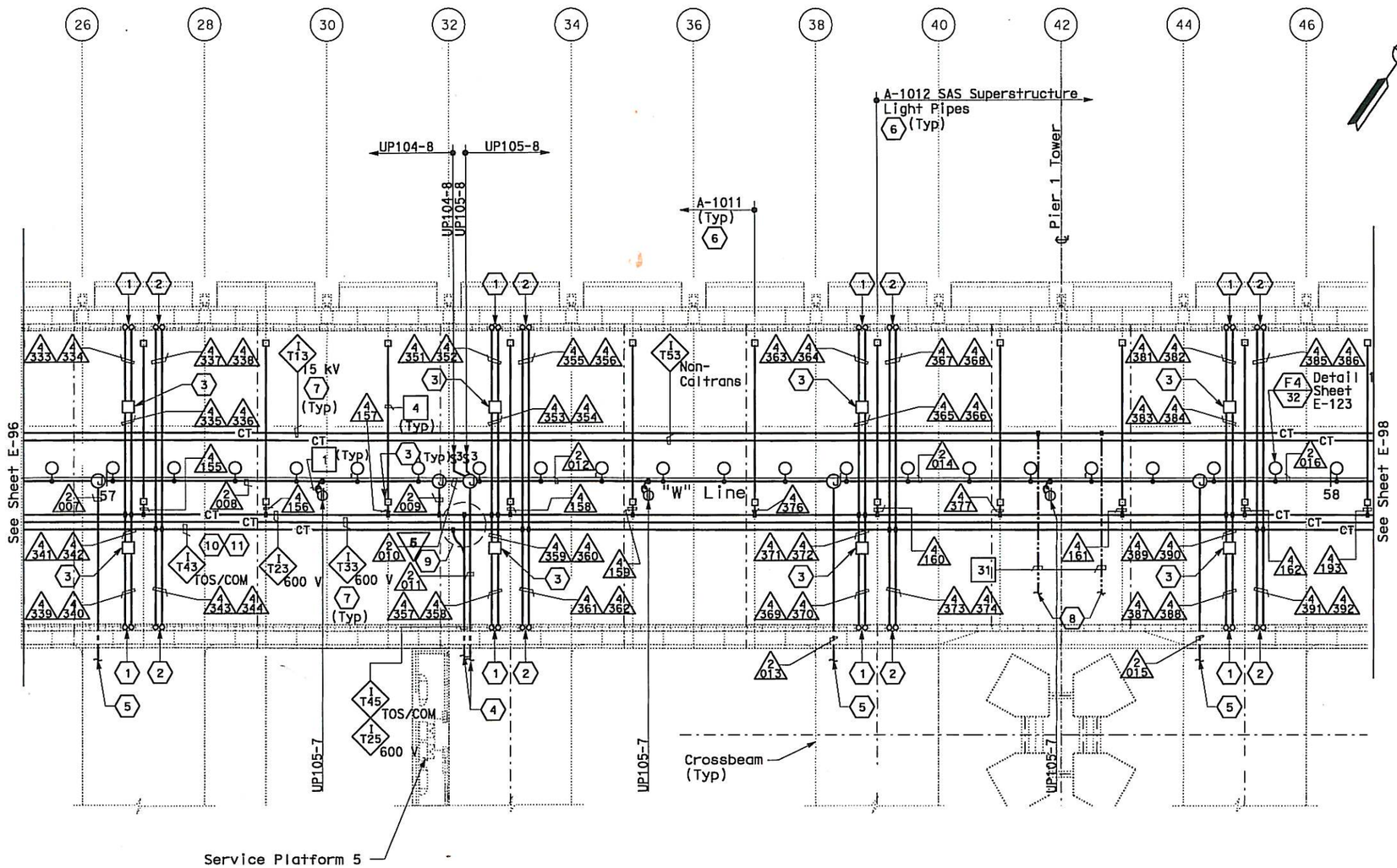

SHEET NOTES:

(1) Conduit up to PB-LTG located in barrier, see sheet E-47.

(2) Conduit up to PB-COM located in barrier, see sheet E-47.

(3) PB-2A locate on top of floor.

(4) For cable tray run and lighting inside crossbeam, see sheet E-115.

(5) For lighting inside crossbeam, see sheet E-119.

(6) PB-2L with circuit for future light pipes. See sheet E-121 for installation details and E-130 for lighting schedule.

(7) For cable tray & ground bar support, refer to sheet E-125.

(8) 250 kcmil copper grounding conductor exothermically welded to 500 kcmil system grounding conductor. Route 250kcmil BCW in 40C liquidtight flexible metal conduit. For continuation, see sheet E-111A. (3)

(9) For fiber splice tray detail, refer to sheet E-355.

(10) Furnish and install 1-25.4 mm innerduct per BASE fiber optic cable in TOS/COM cable tray.

(11) Furnish and install BASE fiber optic cable in innerduct. See sheet E-1100.

NOTES:

1. References:
   - TOS equipment is shown for conduit routing only. For typical details of TOS controller and devices, see sheets E-344 through E-357.
   - For types of pull boxes, splice boxes and enclosures, see sheet E-83.
   - For bridge grounding plan, see sheet E-111.
   - For circuit and conduit/cable tray schedules, see sheets starting at E-401.
2. For other related work not shown on this sheet, see Electrical Special Provisions.
3. The girder lighting fixtures are shown diagrammatically. Contractor shall install fixtures at railing posts with a maximum of 8000 mm between fixtures. For types and typical lighting fixture installation details, see sheet E-123.
4. The cable trays are shown diagrammatically. For typical girder cable tray plans and sections, see sheets E-124 and E-125.

REGISTERED PROFESSIONAL ENGINEER SYN YEE CHIN No. 18186 Exp. 09/30/2011 ELECTRICAL STATE OF CALIFORNIA

Syn Yee Chin
FOR REVISION ONLY (1)

REGISTERED PROFESSIONAL ENGINEER DAVID H. OTO No. 10699 Exp. 06/30/2013 ELECTRICAL STATE OF CALIFORNIA

FOR REVISION ONLY (2) (3)

SAS SUPERSTRUCTURE - CONDUIT AND CABLE TRAY PLAN

REQUEST FOR INFORMATION NOT ADDRESSED IN THIS CCO REMAIN IN FORCE

MARK	DATE	DESCRIPTIONS	BY	CH'D	CCO#
3	10/23/13	ADDITIONAL SAS MISCELLANEOUS ELECTRICAL CHANGES	RR RSB	RG	191S2
2	04/27/12	ELECTRICAL GROUNDING	RSB RM	RG	75
1	03/01/11	BASE INTEGRATION	RSB	WB	150

REVISIONS

CONTRACT CHANGE ORDER NO. 191S2
SHEET 13 OF 40

THIS PLAN IS ACCURATE FOR ELECTRICAL WORK ONLY.

ALL DIMENSIONS ARE IN MILLIMETERS UNLESS OTHERWISE SHOWN.

SAS SUPERSTRUCTURE GIRDER WESTBOUND
LIGHTING AND ELECTRICAL SYSTEMS
SCALE 1:200

E-97

DATE	REVISED BY	DATE	REVISED
8/02	FK	8/02	IAH

CALCULATED/DESIGNED BY FK
CHECKED BY IAH

DESIGN OVERSIGHT
BEHZAD GOLEMOHAMMADI

STATE OF CALIFORNIA - DEPARTMENT OF TRANSPORTATION
Caltrans

FOR REDUCED PLANS ORIGINAL SCALE IS IN MILLIMETERS 0 20 40 60 80

DGN FILE =>04-0120F1_0150R03.dgn
USERNAME =>Llorico

CU 04251
EA 0120F1

LAST REVISION 10-23-13
DATE PLOTTED => 22-OCT-2013
TIME PLOTTED => 09:18

DIST	COUNTY	ROUTE	KILOMETER POST TOTAL PROJECT	SHEET No	TOTAL SHEETS
04	SF	80	13.2/13.9	154 R6	1204

REGISTERED ELECTRICAL ENGINEER 12/19/02 DATE

12-6-04
PLANS APPROVAL DATE

REGISTERED PROFESSIONAL ENGINEER JENS ERLINGSSON No. 8249 Exp. 9/30/06 ELECTRICAL STATE OF CALIFORNIA

PB POWER, Inc.
A Parsons Brinckerhoff Company
303 Second St., Suite 700N
San Francisco, CA 94107-1317

The State of California or its officers or agents shall not be responsible for the accuracy or completeness of electronic copies of this plan sheet.

Caltrans now has a web site! To get to the web site, go to http://www.dot.ca.gov

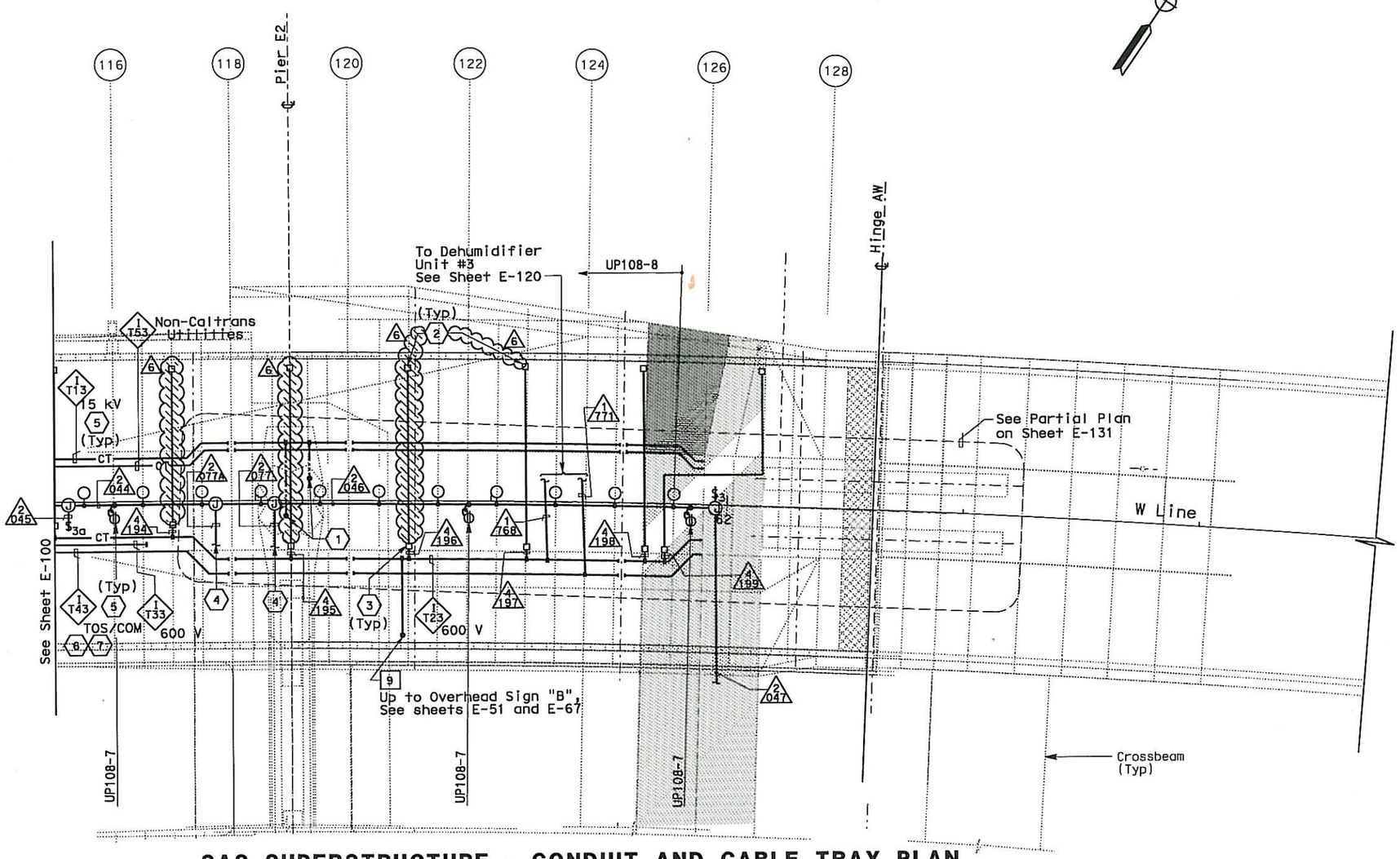

SAS SUPERSTRUCTURE - CONDUIT AND CABLE TRAY PLAN

SHEET NOTES:

1. 250 kcmil bare copper grounding conductor exothermically welded to 500 kcmil system ground conductor. See E2/T1 structures EA-0120E1 for limit of work.
2. PB-2L with circuit for future light pipes.
3. PB-2A, locate on top of floor.
4. For lighting inside crossbeam, see sheet E-119.
5. For cable tray & grounding installation, refer to sheet E-125 and sheet E-111B.
6. Furnish and install 1-25.4 mm innerduct per BASE fiber optic cable in TOS/COM cable tray.
7. Furnish and install BASE fiber optic cable in innerduct. See sheet E-1100.

NOTES:

1. References:
   - TOS equipment is shown for conduit routing only. For typical details of TOS controller and devices, see sheets E-344 through E-361.
   - For types of pull boxes, splice boxes and enclosures, see sheet E-83.
   - For bridge grounding plan, see sheet E-111.
   - For circuit and conduit/cable tray schedules, see sheets starting at E-401.
2. For other work related to Hinge AW and items not shown on this sheet, see Electrical Special Provisions.
3. The girder lighting fixtures are shown diagrammatically.Contractor shall install fixtures at railing posts with a maximum of 8000 mm between fixtures. For types and typical lighting fixture installation details, see sheet E-123.
4. The cable trays are shown diagrammatically. For typical girder cable tray plans and sections, see sheets E-124 and E-125.

REQUEST FOR INFORMATION NOT ADDRESSED IN THIS CCO REMAIN IN FORCE

MARK	DATE	DESCRIPTIONS	BY	CH'D	CCO#
6	10/23/13	ADDITIONAL SAS MISCELLANEOUS ELECTRICAL CHANGES	RR	RG	191S2
5	02/08/13	ADDITIONAL SAS/SKYWAY MISCELLANEOUS ELECTRICAL CHANGES	RR	RG	191S1
4	03/01/11	BASE INTEGRATION	RSB	WB	150
3	03/26/10	DEHUMIDIFIER SCADA INTERFACE	RR	RG FW	130
2	02/25/08	CABLE TRAY CHANGES	MP	RG SE	42S1
1	02/19/08	ELECTRICAL MODIFICATIONS	MP EL	RR	42

REVISIONS

REGISTERED PROFESSIONAL ENGINEER S. A. ESTOCLET No. E-10151 Exp. 12/31/2006 ELECTRICAL STATE OF CALIFORNIA
FOR REVISION ONLY 1 2

REGISTERED PROFESSIONAL ENGINEER SYN YEE CHIN No. 18186 Exp. 09/30/2011 ELECTRICAL STATE OF CALIFORNIA
FOR REVISION ONLY 3 4

REGISTERED PROFESSIONAL ENGINEER DAVID H. OTO No. 10699 Exp. 06/30/2015 ELECTRICAL STATE OF CALIFORNIA
FOR REVISION ONLY 5 6

CONTRACT CHANGE ORDER NO. 191 S2
SHEET 14 OF 40

THIS PLAN ACCURATE FOR ELECTRICAL WORK ONLY.

ALL DIMENSIONS ARE IN METERS UNLESS OTHERWISE SHOWN.

SAS SUPERSTRUCTURE GIRDER WESTBOUND
LIGHTING AND ELECTRICAL SYSTEMS

SCALE 1:200

E-101

STATE OF CALIFORNIA - DEPARTMENT OF TRANSPORTATION

DESIGN OVERSIGHT: BEHZAD GOLEMOHAMMADI

DATE	REVISED BY	DATE REVISED
FK	IAH	

CALCULATED/DESIGNED BY
CHECKED BY

LAST REVISION 10-23-13
DATE PLOTTED => 21-OCT-2013
TIME PLOTTED => 16:52

FOR REDUCED PLANS ORIGINAL SCALE IS IN MILLIMETERS 0 20 40 60 80

DGN FILE =>04-0120f1_0154R06.dgn
USERNAME =>Llorico

CU 04251

EA 0120F1

DIST	COUNTY	ROUTE	KILOMETER POST TOTAL PROJECT	SHEET No	TOTAL SHEETS
04	SF	80	13.2/13.9	155 R3	1204

REGISTERED ELECTRICAL ENGINEER 2/6/04 DATE

12-6-04
PLANS APPROVAL DATE

REGISTERED PROFESSIONAL ENGINEER JENS ERLINGSSON No. 6249 Exp. 9/30/06 ELECTRICAL STATE OF CALIFORNIA

PB POWER, Inc.
A Parsons Brinckerhoff Company
303 Second St., Suite 700N
San Francisco, CA 94107-1317

The State of California or its officers or agents shall not be responsible for the accuracy or completeness of electronic copies of this plan sheet.

Caltrans now has a web site! To get to the web site, go to http://www.dot.ca.gov

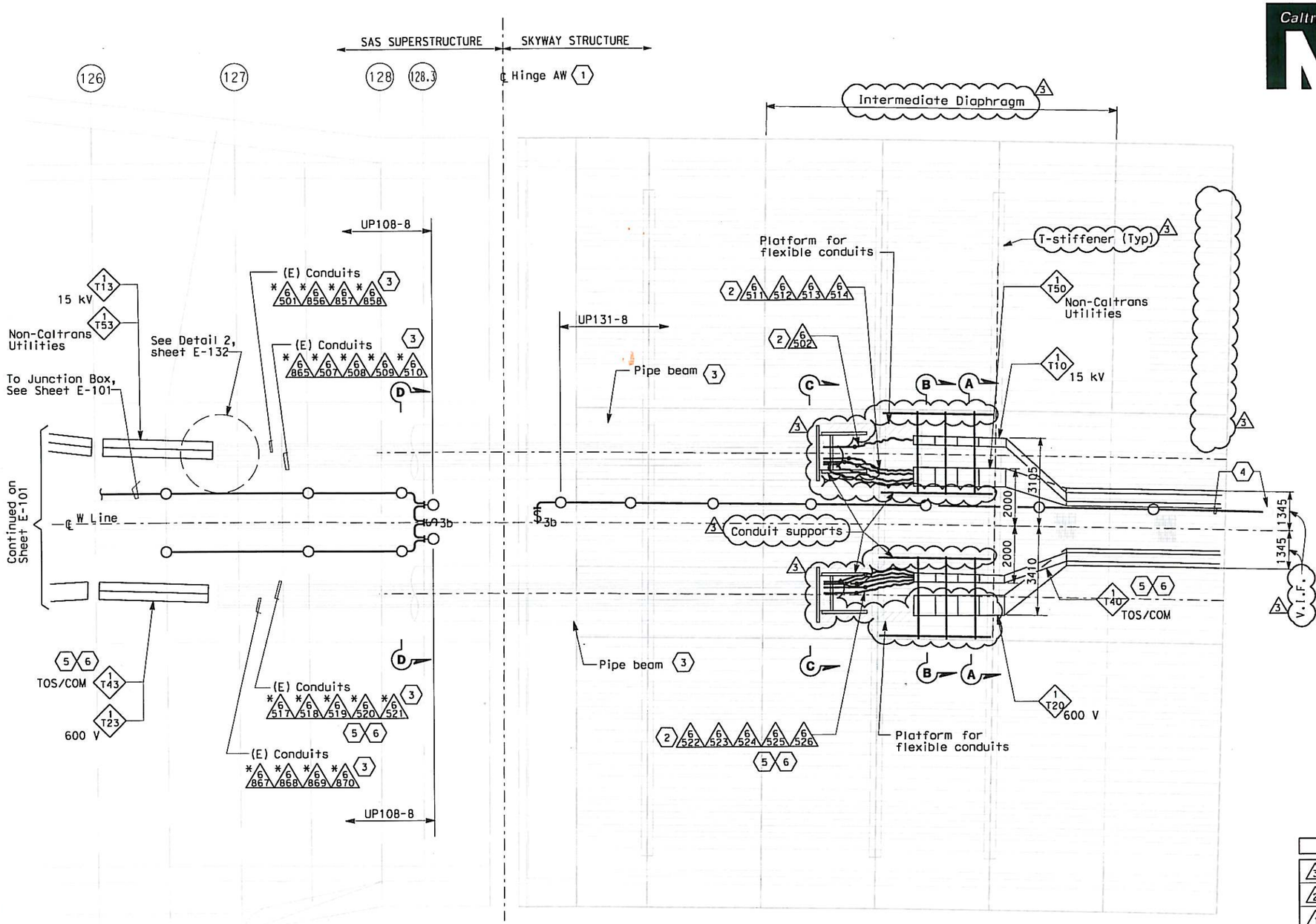

SHEET NOTES:

1. Hinge AW electrical design is based on the maximum expansion joint movement opening of 1243 mm.
2. Arrange and group the flexible 103 mm conduits to maintain a minimum voltage level separation of 460 mm between systems.
3. Existing conduits (*) inside pipe beam are supplied in Skyway contract.
4. Terminate conduit to the next lighting fixture and splice wiring to circuit UP131-8 of Skyway Structure. Contractor to adjust as required.
5. Furnish and install 4-25.4 mm innerducts inside TOS/COM conduits (*6520, 6525) and 1-25.4 mm innerduct per BASE fiber optic cable in TOS/COM cable tray.
6. Furnish and install BASE fiber optic cable in innerduct inside TOS/COM conduit and cable tray. See sheet E-1100.

NOTES:

1. Minimum radius of cable tray fittings shall be 610 mm.
2. Minimum radius of 103 mm conduit bends shall be 610 mm.
3. Cables/circuits passing through the hinge locations shall be provided with cable identification tag at both ends of Hinge.
4. For additional work related not shown on this drawing, see Electrical Special Provisions.
5. Section A-A and B-B see sheet E-132B.
6. Section C-C and Section D-D, see sheet E-132C.

REQUEST FOR INFORMATION NOT ADDRESSED IN THIS CCO REMAIN IN FORCE

MARK	DATE	DESCRIPTIONS	BY	CH'D	CCO#
3	03/27/13	ADDITIONAL SAS MISCELLANEOUS ELECTRICAL CHANGES	RR RSB	RG	191S2
2	03/01/11	BASE INTEGRATION	RSB	WB	150
1	02/25/08	CABLE TRAY CHANGES	JD	RG SE	42S1

REVISIONS

CONTRACT CHANGE ORDER NO. 191 S2
SHEET 15 OF 40

REGISTERED PROFESSIONAL ENGINEER S. A. ESTOQUE, JR. No. E-10151 Exp. 12/31/2008 ELECTRICAL STATE OF CALIFORNIA
FOR REVISION ONLY 1

REGISTERED PROFESSIONAL ENGINEER SYN YEE CHIN No. 18186 Exp. 09/30/2011 ELECTRICAL STATE OF CALIFORNIA
FOR REVISION ONLY 2

REGISTERED PROFESSIONAL ENGINEER DAVID H. OTO No. 10699 Exp. 06/30/2013 ELECTRICAL STATE OF CALIFORNIA
FOR REVISION ONLY 3

PLAN
SCALE: 1:75

SAS SUPERSTRUCTURE AND SKYWAY STRUCTURE
GIRDER INTERFACE WESTBOUND
AS NOTED

E-101A

THIS PLAN IS ACCURATE FOR ELECTRICAL WORK ONLY.

ALL DIMENSIONS ARE IN MILLIMETERS UNLESS OTHERWISE SHOWN

FOR REDUCED PLANS ORIGINAL SCALE IS IN MILLIMETERS 0 20 40 60 80

DGN FILE =>04-0120f1_0155R03.dgn
USERNAME =>Weisheimer

CU 04251 | EA 0120F1

STATE OF CALIFORNIA - DEPARTMENT OF TRANSPORTATION
Caltrans

DESIGN OVERSIGHT: BEHZAD GOLEMOHAMMADI

CALCULATED/DESIGNED BY: CYF | CHECKED BY: EJL | DATE 12/03 | REVISED BY: EJL | DATE REVISED: 2/04

LAST REVISION 03-27-13 | DATE PLOTTED => 3/29/2013 | TIME PLOTTED => 10:35:54 AM

DIST	COUNTY	ROUTE	KILOMETER POST TOTAL PROJECT	SHEET No	TOTAL SHEETS
04	SF	80	13.2/13.9	165 S1R4	1204

REGISTERED ELECTRICAL ENGINEER 8/11/08 DATE

PLANS APPROVAL DATE

REGISTERED PROFESSIONAL ENGINEER FADI WALIEDDINE No. 11465 Exp. 12/31/2009 ELECTRICAL STATE OF CALIFORNIA

PB AMERICAS, Inc.
A Parsons Brinckerhoff Company
303 Second St., Suite 700N
San Francisco, CA 94107-1317

The State of California or its officers or agents shall not be responsible for the accuracy or completeness of electronic copies of this plan sheet.

Caltrans now has a web site! To get to the web site, go to http://www.dot.ca.gov

Caltrans Metric

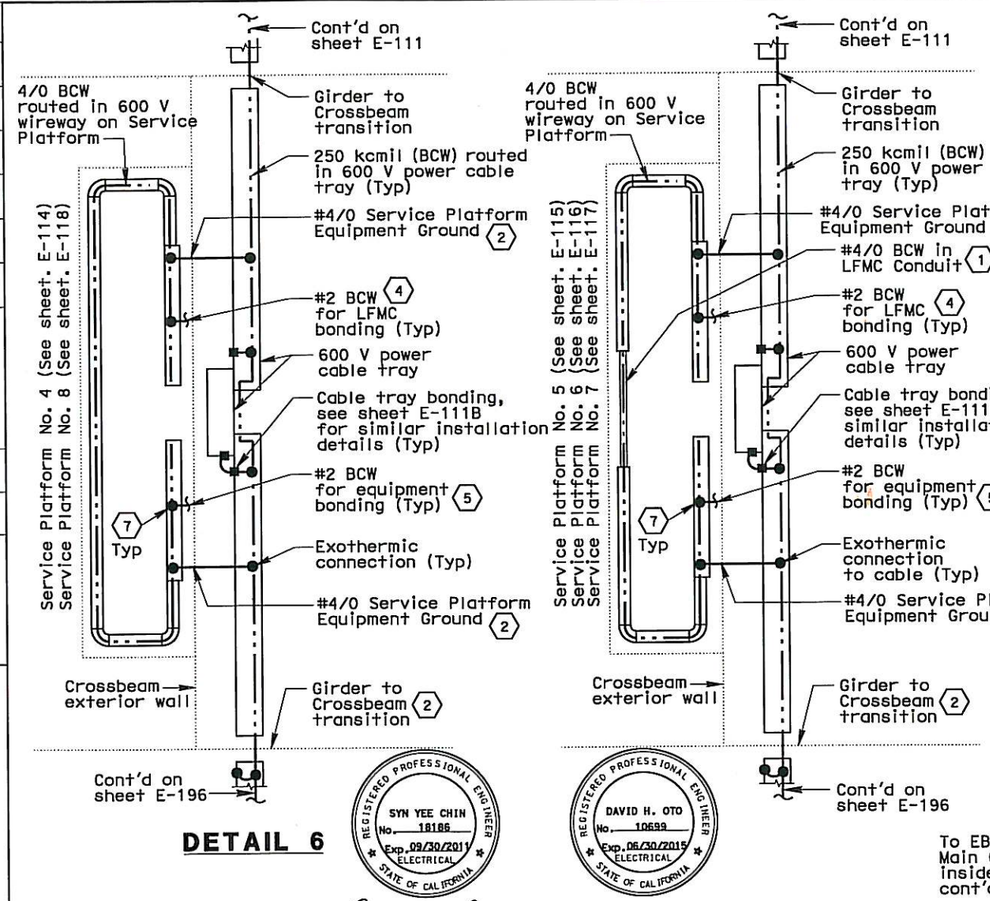

DETAIL 6

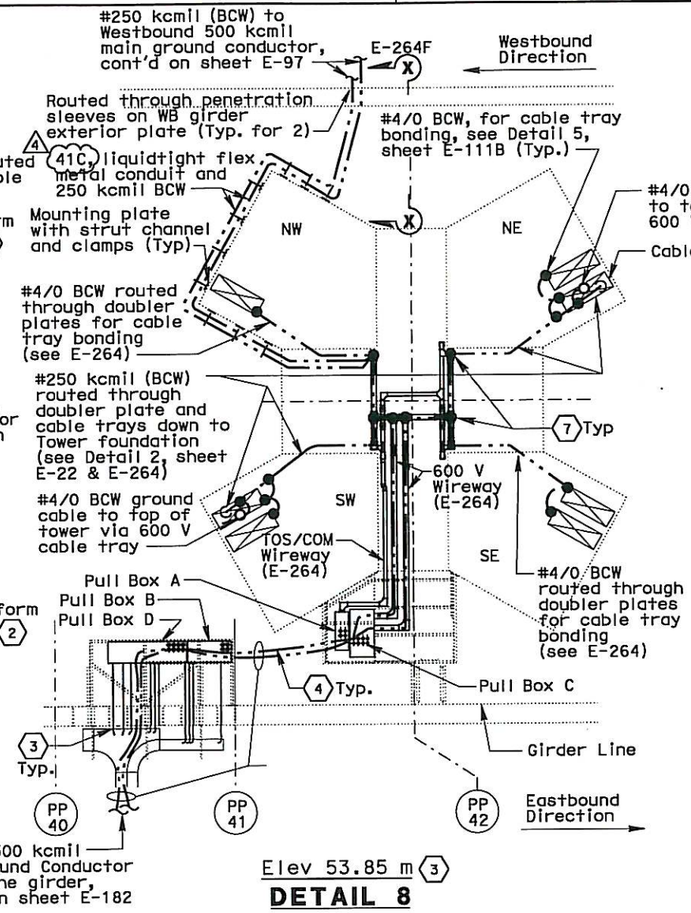

Elev 53.85 m (3)

DETAIL 8

SHEET NOTES:

(1) Ground conductor shall be protected from damage when exposed outside the structures. Route ground cable in liquidtight flexible metal conduit (LFMC) for protection, unless routed in cable tray or wireway unless noted otherwise.

(2) Route #4/0 BCW through crossbeam exterior wall in liquidtight flexible metal conduit via conduit sleeves, see sheets E-114, E-115, E-116, E-117 and E-118.

(3) Install #2 BCW grounding conductors to grounding bushing for bonding conduits to cable tray.

(4) Install #2 BCW inside each liquidtight flex metal conduit and connect between the grounding wire and the conduit grounding bushing, see Detail 7 on sheet E-111B for similar installation.

(5) Ground conductor for equipment bonding shall be routed in the same conduit connected to equipment, see sheets E-71A, E-72A, E-73A, E-74A, E-75A, E-114, E-115, E-116, E-117 and E-118 for equipment arrangement.

(6) Grounding wire splices exposed outside the structures shall be enclosed with NEMA 4X pull box for protection. Where required, mechanical connection using Burndy Versitap Type QPX clamps or equal may be used for splices inside the box in lieu of exothermic weld. Pull box shall be 457 x 305 x 152D or size as required.

(7) Where exothermic weld connection is not feasible inside the wireway, compression type connectors may be used.

NOTES:

1. See sheet E-111 for additional notes and sheet notes.
2. The contractor shall install pull box/JB(s) along conduit runs to limit bends to be three (3) 90 degrees or fewer.

REQUEST FOR INFORMATION NOT ADDRESSED IN THIS CCO REMAIN IN FORCE

MARK	DATE	DESCRIPTIONS	BY	CH'D	CCO#
4	10/23/13	ADDITIONAL SAS MISCELLANEOUS ELECTRICAL CHANGES	RR RSB	RG	191S2
3	04/27/12	ELECTRICAL GROUNDING	RSB RM	RG	75
2	12/21/11	ELECTRICAL CHANGE FOR ELEVATION 53 IMPROVEMENTS	TW	RG	190
1	09/02/11	TOWER SUSPENDER CABLE & ELEVATOR	RM	TW	203S1
0	11/20/09	ELECTRICAL GROUNDING	AG RR	RG	75

REVISIONS

CONTRACT CHANGE ORDER NO. 191S2
SHEET 16 OF 40

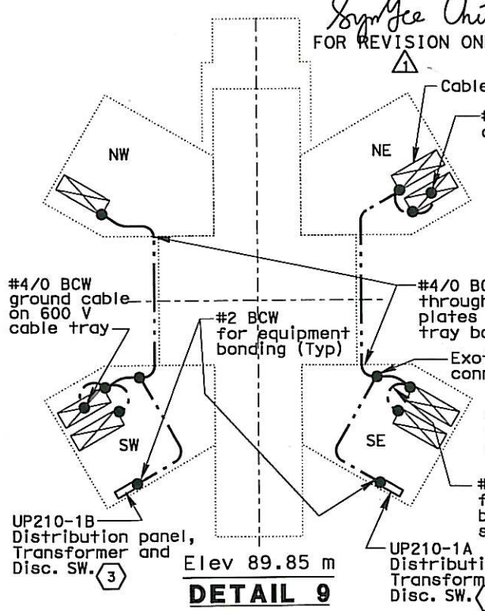

Elev 89.85 m

DETAIL 9

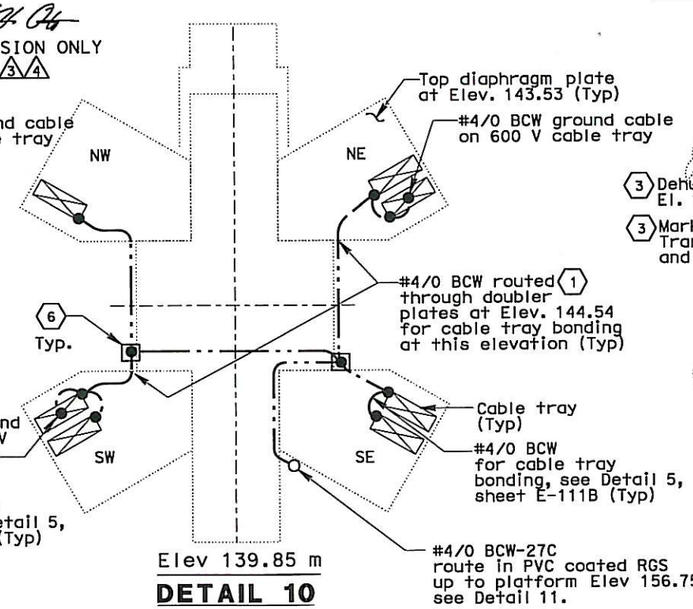

Elev 139.85 m

DETAIL 10

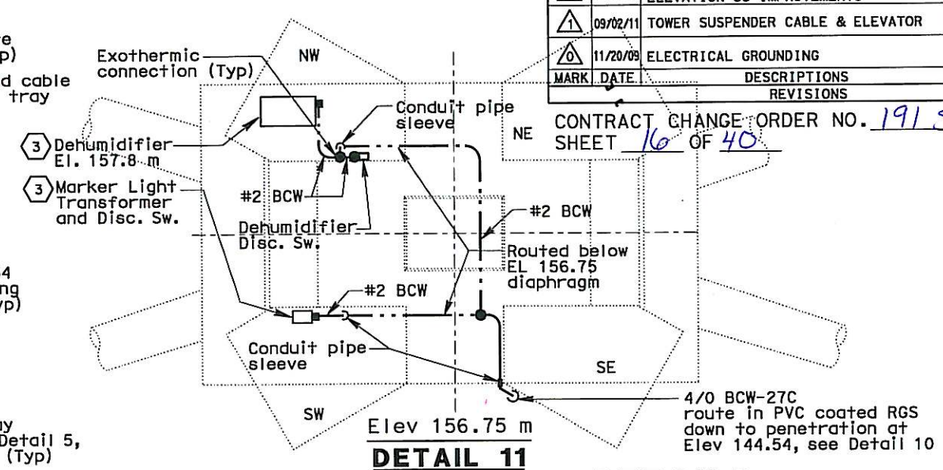

Elev 156.75 m

DETAIL 11

DETAILS
SAS SUPERSTRUCTURE GIRDER WESTBOUND GROUNDING DETAILS
NO SCALE

E-111A

DESIGN OVERSIGHT: BEHZAD GOLEMOHAMMADI

CALCULATED/DESIGNED BY: AWG — CHECKED BY: RG

DATE: 08/08 — REVISED BY: 08/08 — DATE REVISED

STATE OF CALIFORNIA - DEPARTMENT OF TRANSPORTATION — Caltrans

LAST REVISION 10-23-13 — DATE PLOTTED => 21-OCT-2013 — TIME PLOTTED => 16:52

THIS PLAN IS ACCURATE FOR ELECTRICAL WORK ONLY.

ALL DIMENSIONS ARE IN MILLIMETERS UNLESS OTHERWISE SHOWN.

FOR REDUCED PLANS ORIGINAL SCALE IS IN MILLIMETERS 0 20 40 60 80

DGN FILE =>04-0120F1_0165S01R04.dgn
USERNAME =>Llorico

CU 04251 — EA 0120F1

DIST	COUNTY	ROUTE	KILOMETER POST TOTAL PROJECT	SHEET No	TOTAL SHEETS
04	SF	80	13.2/13.9	185 R1	1204

REGISTERED ELECTRICAL ENGINEER 2/6/04 DATE

12-6-04
PLANS APPROVAL DATE

REGISTERED PROFESSIONAL ENGINEER JENS ERLINGSSON No. 8249 Exp. 9/30/06 ELECTRICAL STATE OF CALIFORNIA

PB POWER, Inc.
A Parsons Brinckerhoff Company
303 Second St., Suite 700N
San Francisco, CA 94107-1317

The State of California or its officers or agents shall not be responsible for the accuracy or completeness of electronic copies of this plan sheet.

Caltrans now has a web site! To get to the web site, go to http://www.dot.ca.gov

Caltrans Metric

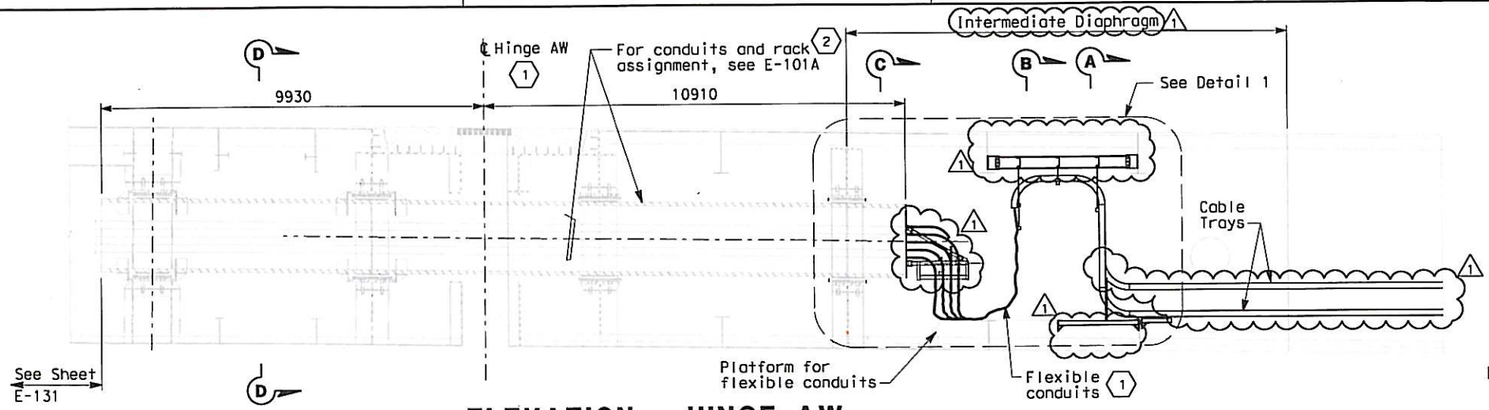

ELEVATION - HINGE AW

AT CENTERLINE OF PIPE BEAM
SCALE 1:75

REGISTERED PROFESSIONAL ENGINEER DAVID H. OTO No. 10699 Exp. 06/30/2013 ELECTRICAL STATE OF CALIFORNIA

FOR REVISION ONLY

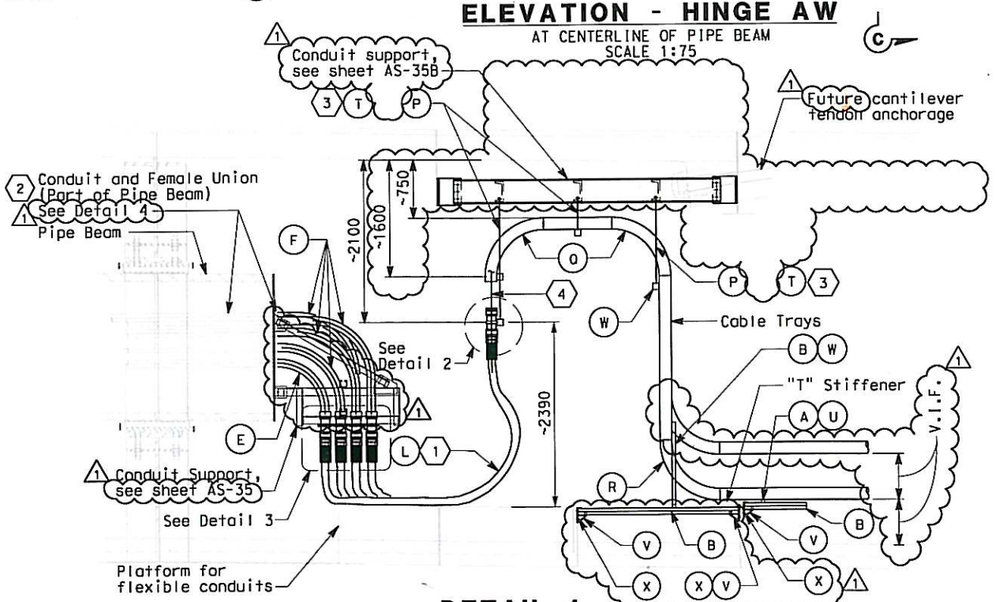

DETAIL 1

SCALE 1:40

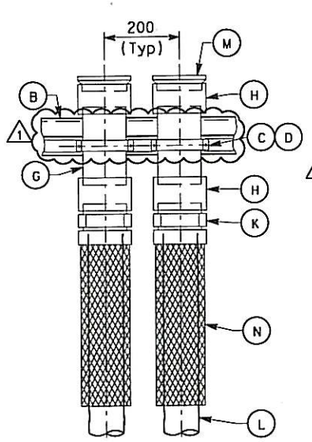

DETAIL 2

NO SCALE

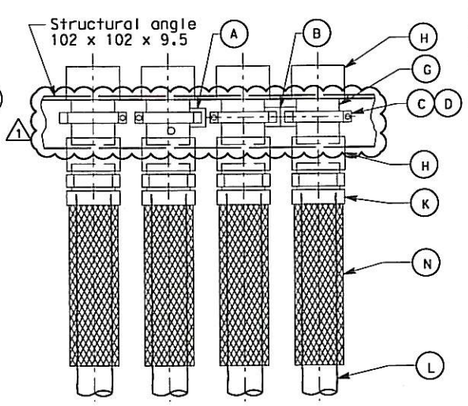

DETAIL 3

NO SCALE

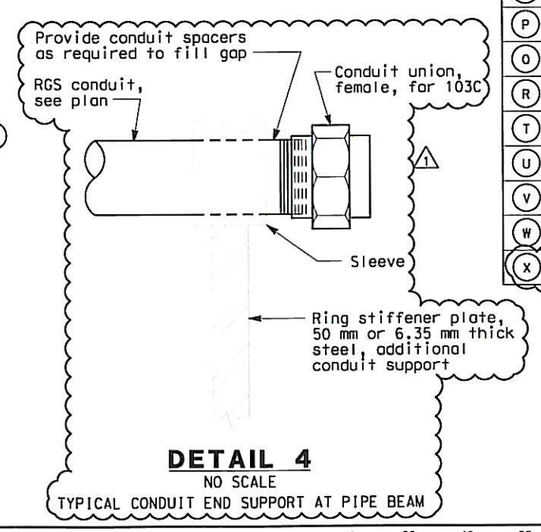

DETAIL 4

NO SCALE
TYPICAL CONDUIT END SUPPORT AT PIPE BEAM

MATERIAL LIST

Item No.	Description
A	Strut channel 41 mm x 41 mm
B	Strut channel combination 41 mm x 82 mm
C	Strut channel spring nut, lockwasher and hex bolt
D	Strut channel conduit clamp for 103 mm
E	Conduit elbow for 103 mm (Radius= 610 mm)
F	Conduit elbow for 103 mm (Radius= 752 mm)
G	Conduit nipple, 103 mm
H	Conduit coupling, 103 mm
J	DELETED
K	Connector, straight liquidtight flexible conduit for 103 mm
L	Liquidtight flexible conduit, 103 mm
M	Insulated bushed nipple for 103 mm conduit
N	Strain relief grips (or AMTEC conduit riser grip) for flexible conduit, 103 mm
P	Threaded steel hanger rod, 12 mm diameter
O	Cable tray vertical outside bend
R	Cable tray vertical inside bend
T	Strut channel spring nut, tee-head bolt
U	Strut channel cable tray clamp for ladder or solid bottom tray
V	Bracket for 82 mm X 82 mm Strut Channel
W	Vertical tray hanger with splice plate hardware (bolted to side rail)
X	13Ø Bolt thru 'T' stiffener web/platform support w/ nut and washer

SHEET NOTES:

1. Hinge AW electrical design is based on the maximum expansion joint movement opening of 1243 mm.
2. Conduits through pipe beam shall be part of the pipe beam assembly. Conduit shall be welded together to form a continuous conduit inside the pipe beam, length as specified. The weld shall be smooth on the outside and free of burrs inside the conduit. Conduit fittings, like coupling, etc. to form a continuous conduit shall not be permitted as alternative. Pipe beam supplied by Skyway Structure.

   The intent of the conduit design is to be able to remove the entire length of conduit inside the pipe beam, in case maintenance is required inside the pipe beam assembly.
3. Cable tray hangers shall be located to provide working space in front of Cantilever tendon anchorage. Field to adjust location accordingly, additional supports as required.
4. All cable/cables entering the liquidtight conduits from the cable trays shall ~~be provided with strain~~ relief cable/cables grips (or AMTEC conduit riser grip) attached from the vertical ~~cable tray rungs.~~

NOTES:

1. Minimum radius of cable tray fittings shall be 610 mm.
2. Minimum radius of 103 mm conduit bends shall be 610 mm.
3. Cables/circuits passing through the hinge locations shall be provided with cable identification tag at both ends of Hinge.
4. For additional work related not shown on this drawing, see Electrical Special Provisions.
5. For Sections A-A and B-B, see sheet E-132B.
6. Sections C-C and D-D, see sheet E-132C.

REQUEST FOR INFORMATION NOT ADDRESSED IN THIS CCO REMAIN IN FORCE

MARK	DATE	DESCRIPTIONS	BY	CH'D	CCO#
1	03/27/13	ADDITIONAL SAS MISCELLANEOUS ELECTRICAL CHANGES	RR RSB	RG	191S2

REVISIONS

CONTRACT CHANGE ORDER NO. 191 S2
SHEET 17 OF 40

DETAILS
SAS SUPERSTRUCTURE AND SKYWAY STRUCTURE GIRDER INTERFACE WESTBOUND HINGE AW

SCALE AS NOTED

E-132A

1	EJL	2/04	REVISED BY	DATE REVISED
			DATE 12/03	1/04
			CYF	EJL
			CALCULATED/DESIGNED BY	CHECKED BY

DESIGN OVERSIGHT
BEHZAD GOLEMOHAMMADI

STATE OF CALIFORNIA - DEPARTMENT OF TRANSPORTATION
Caltrans

LAST REVISION 03-27-13
DATE PLOTTED => 3/29/2013
TIME PLOTTED => 10:36:15 AM

FOR REDUCED PLANS ORIGINAL SCALE IS IN MILLIMETERS 0 20 40 60 80

DGN FILE =>04-0120F1_0185R01.dgn
USERNAME =>Melsheimer

CU 04251 | EA 0120F1

DIST	COUNTY	ROUTE	KILOMETER POST TOTAL PROJECT	SHEET No.	TOTAL SHEETS
04	SF	80	13.2/13.9	186 R1	1204

REGISTERED ELECTRICAL ENGINEER 2/6/04 DATE

12-6-04
PLANS APPROVAL DATE

REGISTERED PROFESSIONAL ENGINEER JENS ERLINGSSON No. 8249 Exp. 9/30/06 ELECTRICAL STATE OF CALIFORNIA

PB POWER, Inc.
A Parsons Brinckerhoff Company
303 Second St., Suite 700N
San Francisco, CA 94107-1317

The State of California or its officers or agents shall not be responsible for the accuracy or completeness of electronic copies of this plan sheet.

Caltrans now has a web site! To get to the web site, go to http://www.dot.ca.gov

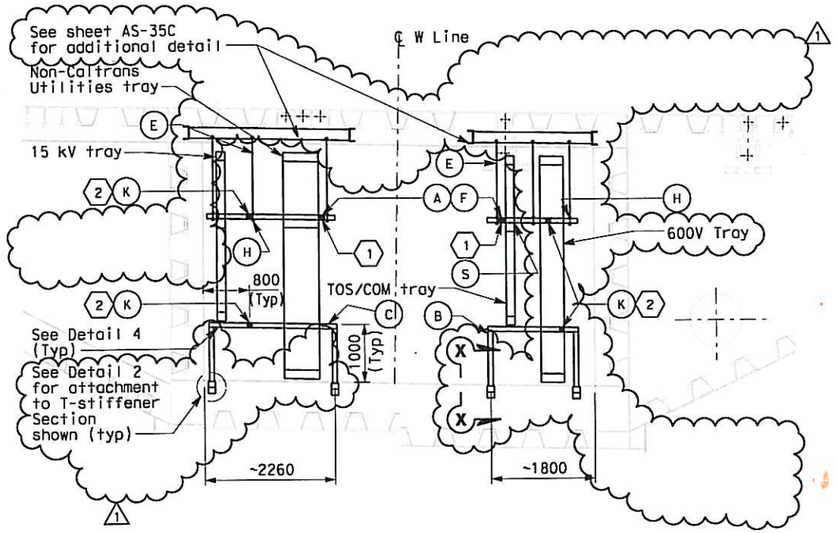

SECTION A-A
SCALE 1:50

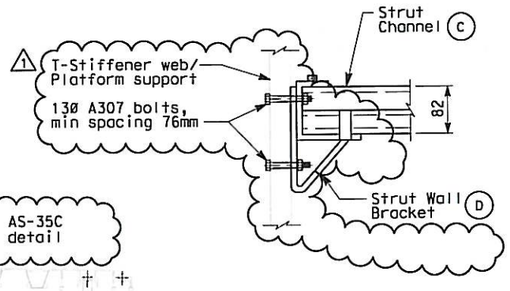

DETAIL 2
(TYPICAL BRACKET TRAY SUPPORT)
SCALE 1:5

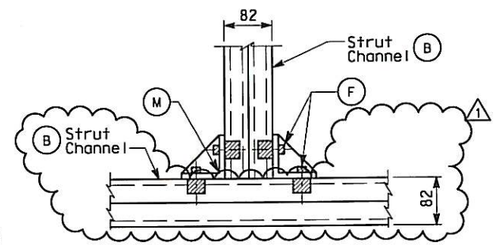

SECTION X-X
(TYPICAL BRACKET SUPPORT)
SCALE 1:5

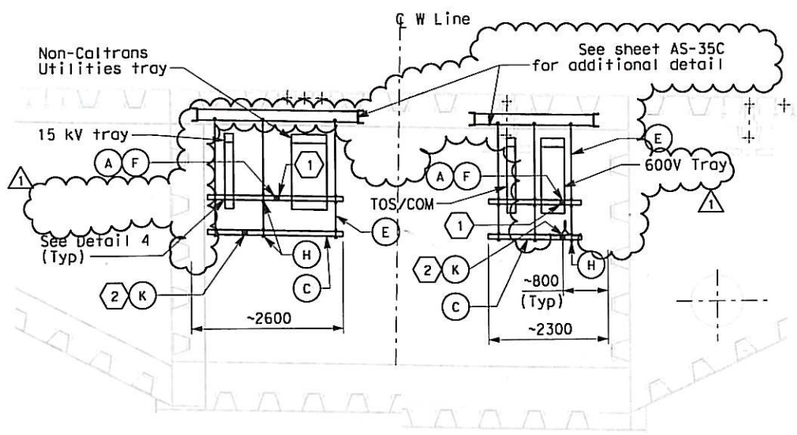

SECTION B-B
SCALE 1:50

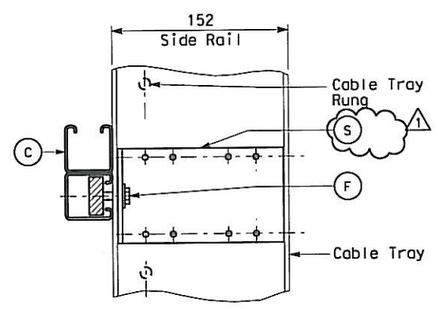

DETAIL 4
(TYPICAL VERTICAL CABLE TRAY SUPPORT)
SCALE 1:2.5

SHEET NOTES:

(1) For seismic bracing, use strut channel installed diagonally to connect horizontal member of one hanger to horizontal member of adjacent hanger. See Sections A-A and B-B for connecting points.

(2) For seismic bracing, use strut channel installed diagonally to connect horizontal member of tray support to adjacent support.

NOTES:

1. Materials, hardware and fittings shall be galvanized or stainless steel. For additional requirements, see Electrical Special Provisions.
2. References:
   - For plans and sections, see sheets E-101A and E-132A.

MATERIAL LIST

Item No.	Description	Remarks
A	Strut channel, 41 mm x 41 mm	Length as required
B	Strut channel, 41 mm x 82 mm	Length as required
C	Strut channel combination, 41 mm x 82 mm	Length as required
D	Strut wall bracket	
E	Threaded steel hanger rod, 12 mm diameter	Length as required
F	Strut channel spring nut, lockwasher and hex bolt	
H	Strut channel hanger trapeze hardware kit	
J	DELETED	
K	Strut channel brace fittings for horizontal seismic support	Length as required
M	Strut channel wing shape fitting	
R	DELETED	
S	Vertical tray hanger with splice plate hardware (Bolted to side rail)	

REQUEST FOR INFORMATION NOT ADDRESSED IN THIS CCO REMAIN IN FORCE					
1	03/27/13	ADDITIONAL SAS MISCELLANEOUS ELECTRICAL CHANGES	RR RSB	RG	191S2
MARK	DATE	DESCRIPTIONS	BY	CH'D	CCO#
REVISIONS					

CONTRACT CHANGE ORDER NO. 191S2
SHEET 18 OF 40

REGISTERED PROFESSIONAL ENGINEER DAVID H. OTO No. 10699 Exp. 06/30/2013 ELECTRICAL STATE OF CALIFORNIA

FOR REVISION ONLY

DETAILS
SAS SUPERSTRUCTURE AND SKYWAY STRUCTURE GIRDER INTERFACE WESTBOUND HINGE AW TRAY SUPPORTS
SCALE AS NOTED

E-132B

STATE OF CALIFORNIA - DEPARTMENT OF TRANSPORTATION

DESIGN OVERSIGHT: BEHZAD GOLEMOHAMMADI

CALCULATED/DESIGNED BY: EJL — CHECKED BY: CYF

DATE 12/03 — REVISED BY: EJL — DATE REVISED: 2/04

DATE 1/04

LAST REVISION 03-27-13 — DATE PLOTTED => 3/29/2013 — TIME PLOTTED => 11:34:49 AM

FOR REDUCED PLANS ORIGINAL SCALE IS IN MILLIMETERS: 0 20 40 60 80

DGN FILE =>04-0120f1_0186R01.dgn
USERNAME =>Melsheimer

CU 04251 — EA 0120F1

DIST	COUNTY	ROUTE	KILOMETER POST TOTAL PROJECT	SHEET No	TOTAL SHEETS
04	SF	80	13.2/13.9	187 R3	1204

REGISTERED ELECTRICAL ENGINEER 2/6/04 DATE

12-6-04
PLANS APPROVAL DATE

REGISTERED PROFESSIONAL ENGINEER JENS ERLINGSSON No. 8249 Exp. 9/30/06 ELECTRICAL STATE OF CALIFORNIA

PB POWER, Inc.
A Parsons Brinckerhoff Company
303 Second St., Suite 700N
San Francisco, CA 94107-1317

The State of California or its officers or agents shall not be responsible for the accuracy or completeness of electronic copies of this plan sheet.

Caltrans now has a web site! To get to the web site, go to http://www.dot.ca.gov

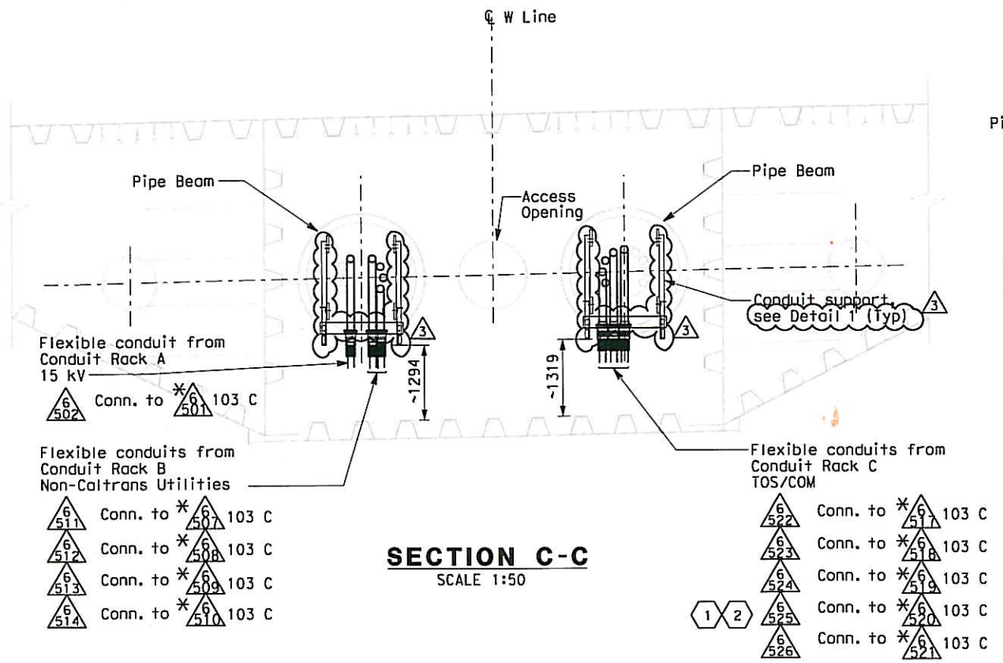

SECTION C-C
SCALE 1:50

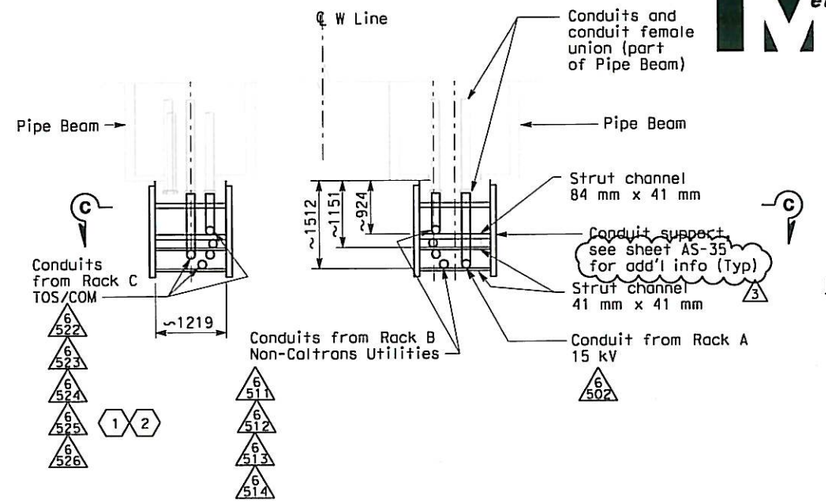

PLAN - DETAIL 1
SCALE 1:50

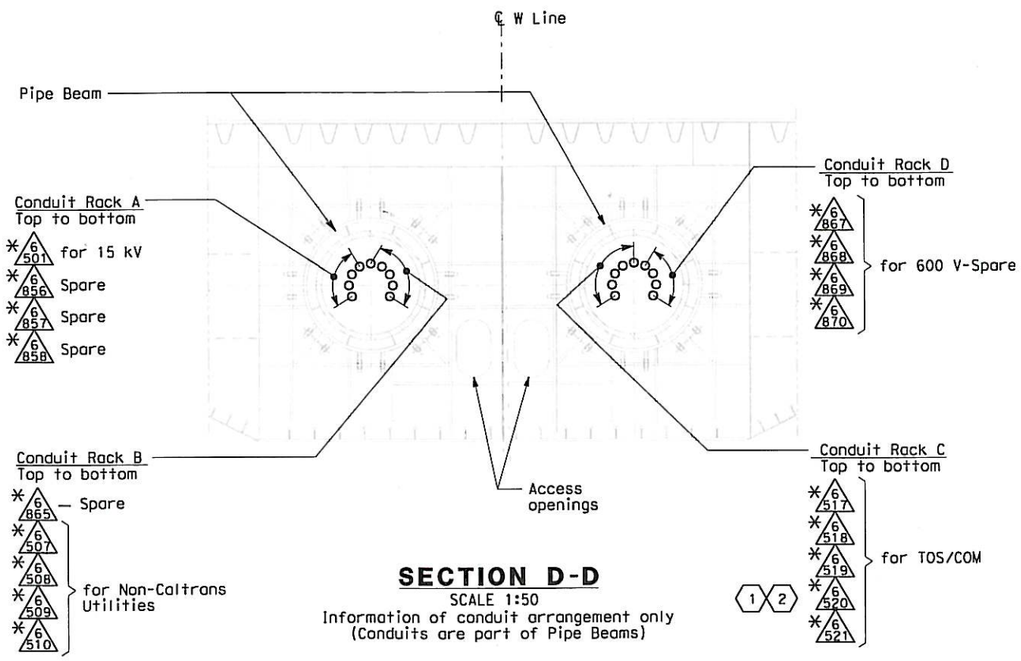

SECTION D-D
SCALE 1:50
Information of conduit arrangement only
(Conduits are part of Pipe Beams)

NOTES:

1. Materials, hardware and fittings shall be galvanized or stainless steel. For additional requirements, see Electrical Special Provisions.
2. References:
   - For Westbound plans and sections, see sheets E-101A and E-132A.
3. Existing conduits (*) inside pipe beam are supplied in Skyway contract.

SHEET NOTES:

(1) Furnish and install 4-25.4 mm innerducts inside TOS/COM conduits (*6520, 6525) and 1-25.4 mm innerduct per BASE fiber optic cable in TOS/COM cable tray.

(2) Furnish and install BASE fiber optic cable in innerduct inside TOS/COM conduit and cable tray. See sheet E-1100.

REGISTERED PROFESSIONAL ENGINEER DAVID H. OTO No. 10699 Exp. 06/30/2013 ELECTRICAL STATE OF CALIFORNIA
FOR REVISION ONLY 3

REGISTERED PROFESSIONAL ENGINEER SYN YEE CHIN No. 18186 Exp. 09/30/2011 ELECTRICAL STATE OF CALIFORNIA
FOR REVISION ONLY 2

REGISTERED PROFESSIONAL ENGINEER S. A. ESTOQUE, JR. No. E-10151 Exp. 12/31/2008 ELECTRICAL STATE OF CALIFORNIA
FOR REVISION ONLY 1

REQUEST FOR INFORMATION NOT ADDRESSED IN THIS CCO REMAIN IN FORCE

MARK	DATE	DESCRIPTIONS	BY	CH'D	CCO#
3	03/27/13	ADDITIONAL SAS MISCELLANEOUS ELECTRICAL CHANGES	RR RSB	RG	19152
2	03/01/11	BASE INTEGRATION	RSB	WB	150
1	02/25/08	CABLE TRAY CHANGES	JD	RG SE	4251

REVISIONS

CONTRACT CHANGE ORDER NO. 19152
SHEET 19 OF 40

DETAILS
SAS SUPERSTRUCTURE AND SKYWAY STRUCTURE GIRDER INTERFACE WESTBOUND HINGE AW SUPPORTS
SCALE AS NOTED

E-132C

DATE	REVISED BY	DATE REVISED
12/03	CYF	EJL
1/04	EJL	2/04

CALCULATED/DESIGNED BY
CHECKED BY
DESIGN OVERSIGHT
BEHZAD GOLEMOHAMMADI

STATE OF CALIFORNIA - DEPARTMENT OF TRANSPORTATION
Caltrans

LAST REVISION 03-27-13
DATE PLOTTED => 3/29/2013
TIME PLOTTED => 10:37:02 AM

THIS PLAN ACCURATE FOR ELECTRICAL WORK ONLY.

ALL DIMENSIONS ARE IN MILLIMETERS UNLESS OTHERWISE SHOWN

FOR REDUCED PLANS ORIGINAL SCALE IS IN MILLIMETERS 0 20 40 60 80

DGN FILE =>04-0120F1_0187R03.dgn
USERNAME =>Weisheimer

CU 04251

EA 0120F1

DIST	COUNTY	ROUTE	KILOMETER POST TOTAL PROJECT	SHEET NO.	TOTAL SHEETS
04	SF	80	13.2/13.9	214R2	1204

REGISTERED ENGINEER-CIVIL

12-6-04
PLANS APPROVAL DATE

REGISTERED PROFESSIONAL ENGINEER T. W. SPARKS No. E16039 Exp. 9-30-13 ELECTRICAL STATE OF CALIFORNIA

The State of California or its officers or agents shall not be responsible for the accuracy or completeness of electronic copies of this plan sheet.

T.Y. LIN / MOFFATT & NICHOL
825 BATTERY STREET
SAN FRANCISCO, CA 94111

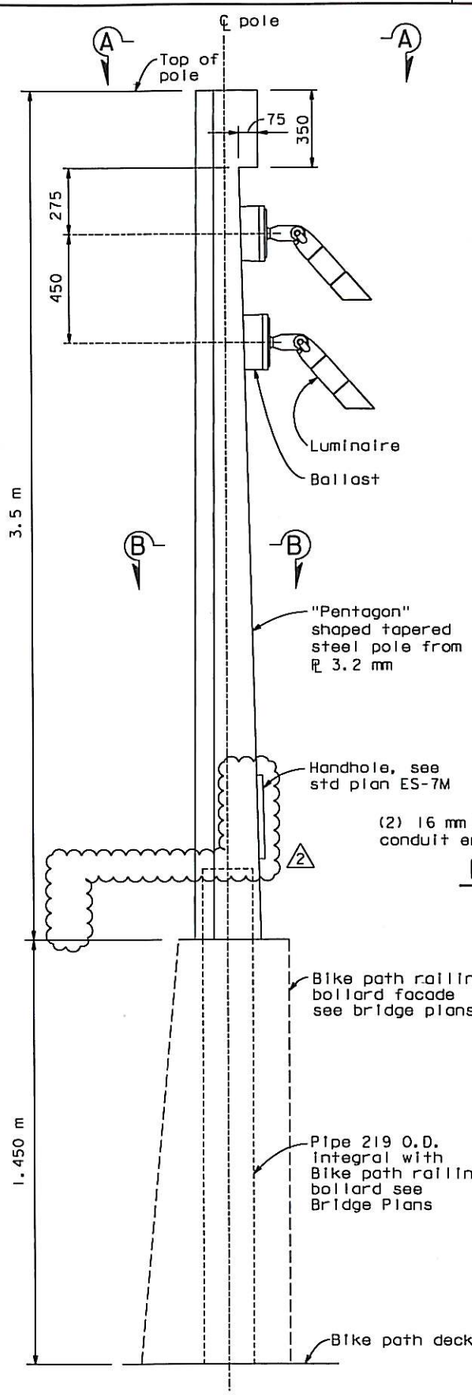

ELEVATION
POLE DETAIL
Not to scale

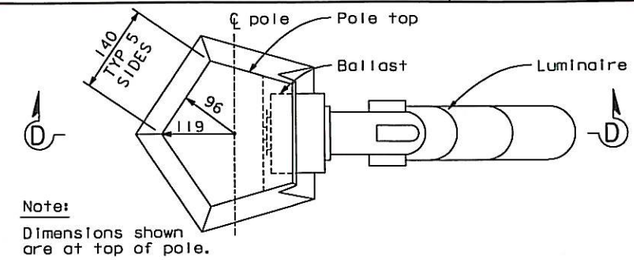

Note:
Dimensions shown are at top of pole.

SECTION A-A
Not to scale

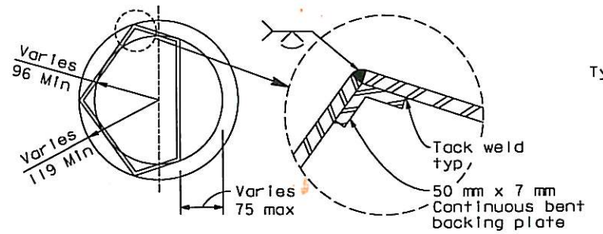

SECTION B-B
Not to scale

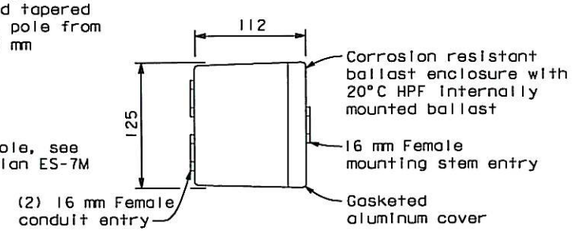

BALLAST - TOP VIEW
Not to scale

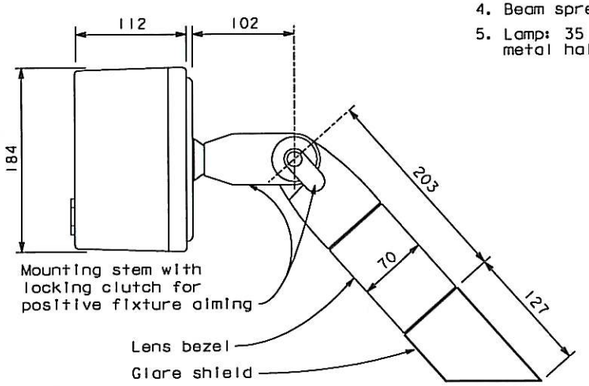

FIXTURE DETAIL
Not to scale

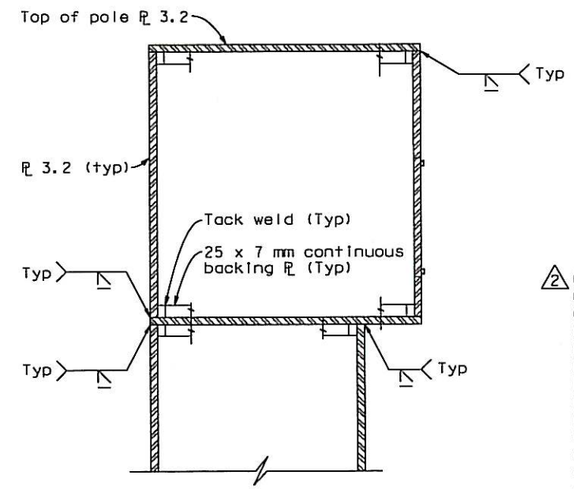

DETAIL AT TOP OF POLE
Not to scale

Pole notes:

1. Wind Loading: 190 km/h velocity (at bridge deck) AASHTO
2. All welding continuous unless otherwise noted on the plans. All welding to be done in accordance with the standard specifications.
3. Pole details shall be submitted to the engineer for approval.
4. For pole finish see special provisions.
5. For additional notes see std plan ES-7M.

Luminaire fixture notes:

1. Finish: Double chromate conversion undercoating with thermoplastic polyester powder coat finish.
2. Hardware: Stainless steel corrosion resistant.
3. U.L. Listed wet location.
4. Beam spread: 30°
5. Lamp: 35 watt, par 20 metal halide

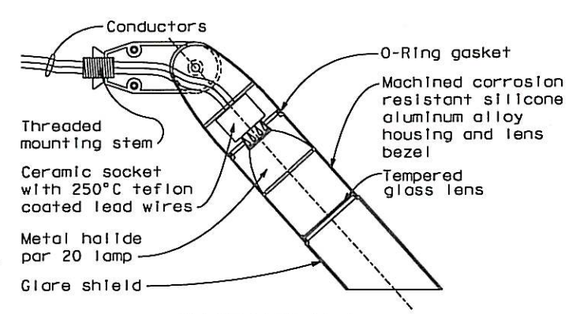

SECTION D-D
Not to scale

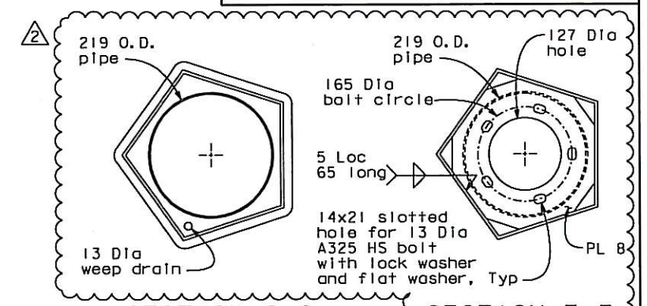

SECTION C-C
1:5

SECTION E-E
1:5

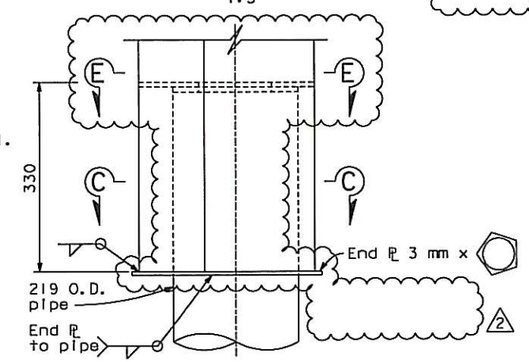

SLIP JOINT DETAIL
(Verify fit with Bike path railing bollard fabricator)
1:5

* * * POLES WILL BE STATE FURNISHED * * *
DETAILS ARE SHOWN IN CONTRACT NO. BATA 007

CONTRACT CHANGE ORDER NO. 19152
SHEET 20 OF 40

REQUESTS FOR INFORMATION NOT ADDRESSED IN THIS CCO REMAIN IN FORCE

MARK	DATE	DESCRIPTIONS	BY	CH'D	CCO#
2	03/08/13	ADDITIONAL MISCELLANEOUS ELECTRICAL	JB	TS	19152
1	04/22/11	STATE FURNISHED LIGHT POLES	JB	TS	43S1

REVISIONS

DETAILS
SAS SUPERSTRUCTURE ROADWAY EASTBOUND
TYPICAL BELVEDERE LIGHTING
SCALE AS NOTED

E-173

ALL DIMENSIONS ARE IN MILLIMETERS UNLESS OTHERWISE SHOWN.

DATE	REVISED BY	DATE	REVISED
CALCULATED/DESIGNED BY	GAM	10/00	
CHECKED BY	TYL	10/00	
DESIGN OVERSIGHT	BOB ZANDIPOUR		

SAS STRUCTURE
STATE OF CALIFORNIA - DEPARTMENT OF TRANSPORTATION
Caltrans

LAST REVISION 04-19-00 | DATE PLOTTED => 08 MAR 2013 | TIME PLOTTED => 09:02:40

FOR REDUCED PLANS ORIGINAL SCALE IN MILLIMETERS 0 20 40 60 80

FILE => I:\bb\04-012001\sas\contract plans and cco\cco\cco#19152\1-original 03-08-13\dgn\401200ug173.dgn
USERNAME => DWinrow

CU 04251 | EA 0120F1

DIST	COUNTY	ROUTE	KILOMETER POST TOTAL PROJECT	SHEET No	TOTAL SHEETS
04	SF	80	13.2/13.9	221 R3	1204

REGISTERED ELECTRICAL ENGINEER 2/6/04 DATE

12-6-04
PLANS APPROVAL DATE

PB POWER, Inc.
A Parsons Brinckerhoff Company
303 Second St., Suite 700N
San Francisco, CA 94107-1317

The State of California or its officers or agents shall not be responsible for the accuracy or completeness of electronic copies of this plan sheet.

Caltrans now has a web site! To get to the web site, go to http://www.dot.ca.gov

FOR REVISION ONLY FOR REVISION ONLY FOR REVISION ONLY

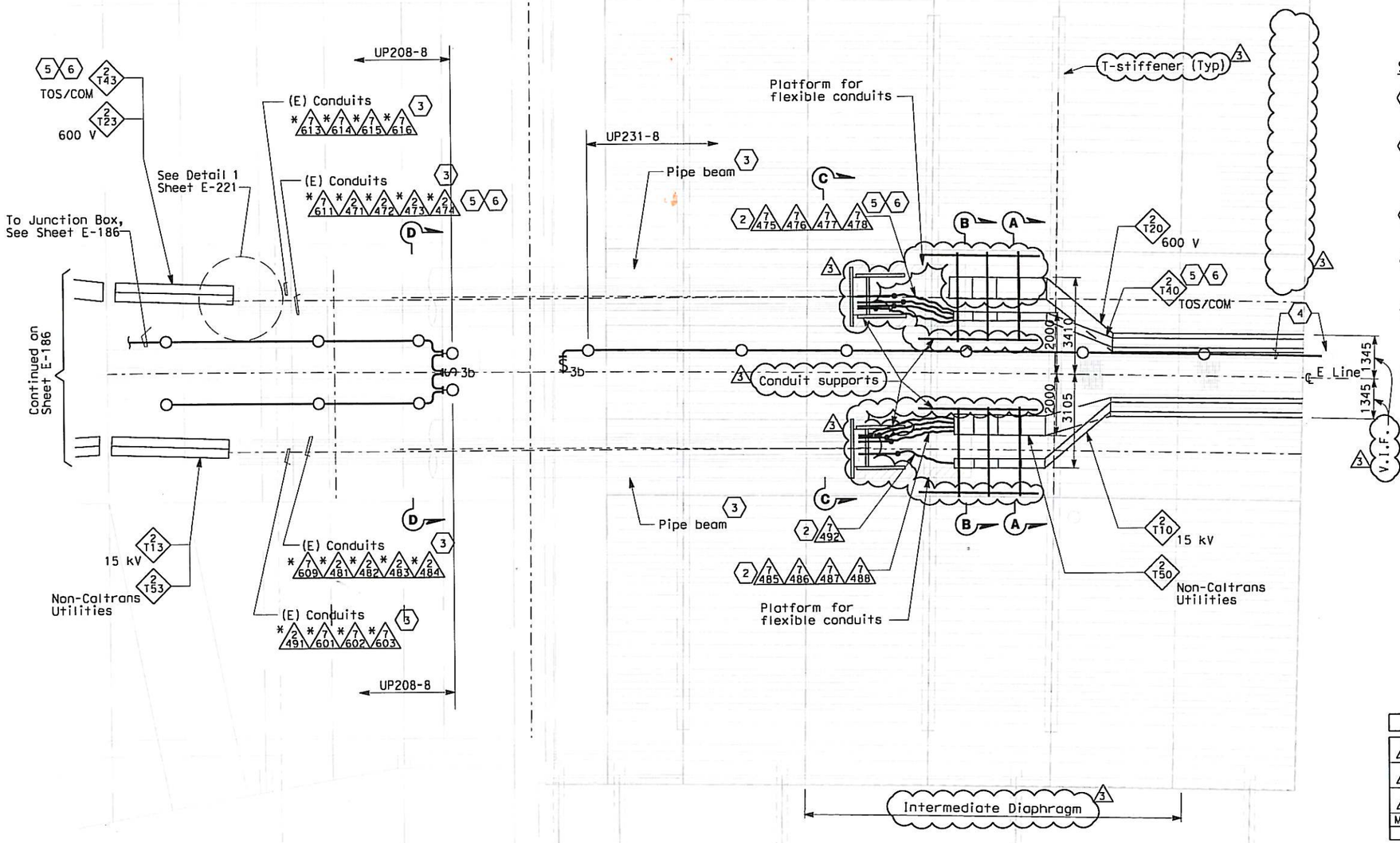

SHEET NOTES:

1. Hinge AE electrical design is based on the maximum expansion joint movement opening of 1243 mm.
2. Arrange and group the flexible 103 mm conduits to maintain a minimum voltage level separation of 460 mm between systems.
3. Existing conduits(*) inside pipe beam are supplied in Skyway contract.
4. Terminate conduit to the next lighting fixture and splice wiring to circuit UP231-8 of Skyway Structure.
5. Furnish and install 4-25.4 mm innerducts inside TOS/COM conduits (*2474, 7478) and 1-25.4 mm innerduct per BASE fiber optic cable in TOS/COM cable tray.
6. Furnish and install BASE fiber optic cable in innerduct inside TOS/COM conduit and cable tray. See sheet E-1101.

NOTES:

1. Minimum radius of cable tray fittings shall be 610 mm.
2. Minimum radius of 103 mm conduits bends shall be 610 mm.
3. Cables/circuits passing through the hinge locations shall be provided with cable identification tag at both ends of Hinge.
4. For additional work related not shown on this drawing, see Electrical Special Provisions.
5. Section A-A and B-B see sheet E-221B.
6. Section C-C and Section D-D, see sheet E-221C.

REQUEST FOR INFORMATION NOT ADDRESSED IN THIS CCO REMAIN IN FORCE

MARK	DATE	DESCRIPTIONS	BY	CH'D	CCO#
3	03/27/13	ADDITIONAL SAS MISCELLANEOUS ELECTRICAL CHANGES	RR RSB	RG	191S2
2	03/01/11	BASE INTEGRATION	RSB	WB	150
1	02/25/08	CABLE TRAY CHANGES	JD	RG SE	4251

REVISIONS

CONTRACT CHANGE ORDER NO. 191 S2
SHEET 21 OF 40

SAS SUPERSTRUCTURE AND SKYWAY STRUCTURE
GIRDER INTERFACE EASTBOUND
AS NOTED

PLAN
SCALE: 1:75

E-186A

REVISED BY	DATE REVISED
EJL	2/04

CALCULATED/DESIGNED BY	CYF	DATE 12/03
CHECKED BY	EJL	1/04

DESIGN OVERSIGHT: BEHZAD GOLEMOHAMMADI

DRAFT 1 (03/01/11)

STATE OF CALIFORNIA - DEPARTMENT OF TRANSPORTATION

THIS PLAN ACCURATE FOR ELECTRICAL WORK ONLY.

ALL DIMENSIONS ARE IN MILLIMETERS UNLESS OTHERWISE SHOWN.

FOR REDUCED PLANS ORIGINAL SCALE IS IN MILLIMETERS 0 20 40 60 80

DGN FILE =>04-0120f1_0221R03.dgn
USERNAME =>Meisheimer

CU 04251 EA 0120F1

LAST REVISION 03-27-13 DATE PLOTTED => 3/29/2013 TIME PLOTTED => 10:37:28 AM

DIST	COUNTY	ROUTE	KILOMETER POST TOTAL PROJECT	SHEET No	TOTAL SHEETS
04	SF	80	13.2/13.9	241 R1	1204

REGISTERED ELECTRICAL ENGINEER 2/6/04 DATE

12-6-04
PLANS APPROVAL DATE

REGISTERED PROFESSIONAL ENGINEER JENS ERLINGSSON No. 8249 Exp. 9/30/06 ELECTRICAL STATE OF CALIFORNIA

PB POWER, Inc.
A Parsons Brinckerhoff Company
303 Second St., Suite 700N
San Francisco, CA 94107-1317

The State of California or its officers or agents shall not be responsible for the accuracy or completeness of electronic copies of this plan sheet.

Caltrans now has a web site! To get to the web site, go to http://www.dot.ca.gov

Caltrans Metric

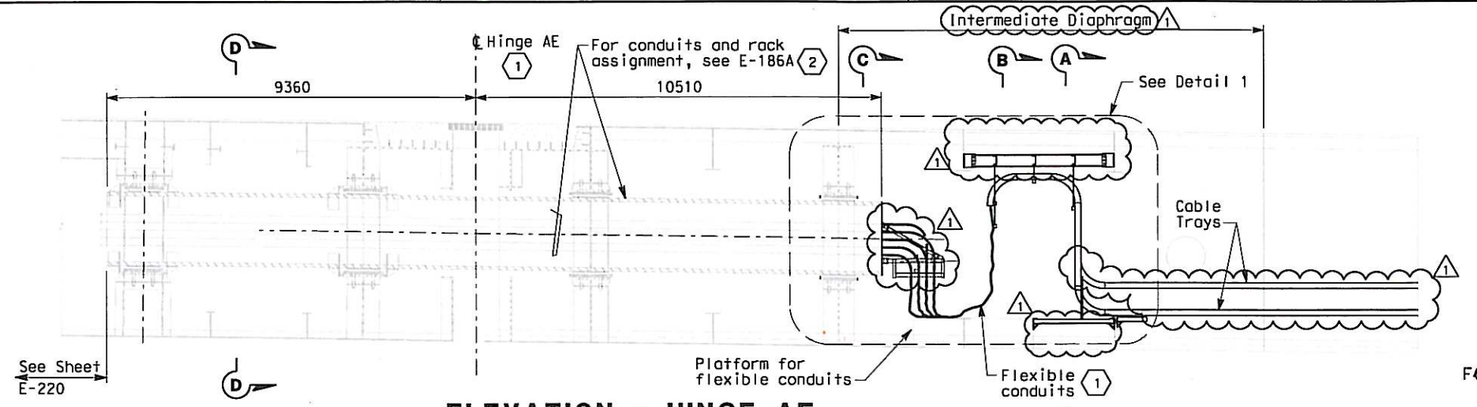

ELEVATION - HINGE AE

AT CENTERLINE OF PIPE BEAM
SCALE 1:75

REGISTERED PROFESSIONAL ENGINEER DAVID H. OTO No. 10699 Exp. 06/30/2013 ELECTRICAL STATE OF CALIFORNIA

FOR REVISION ONLY

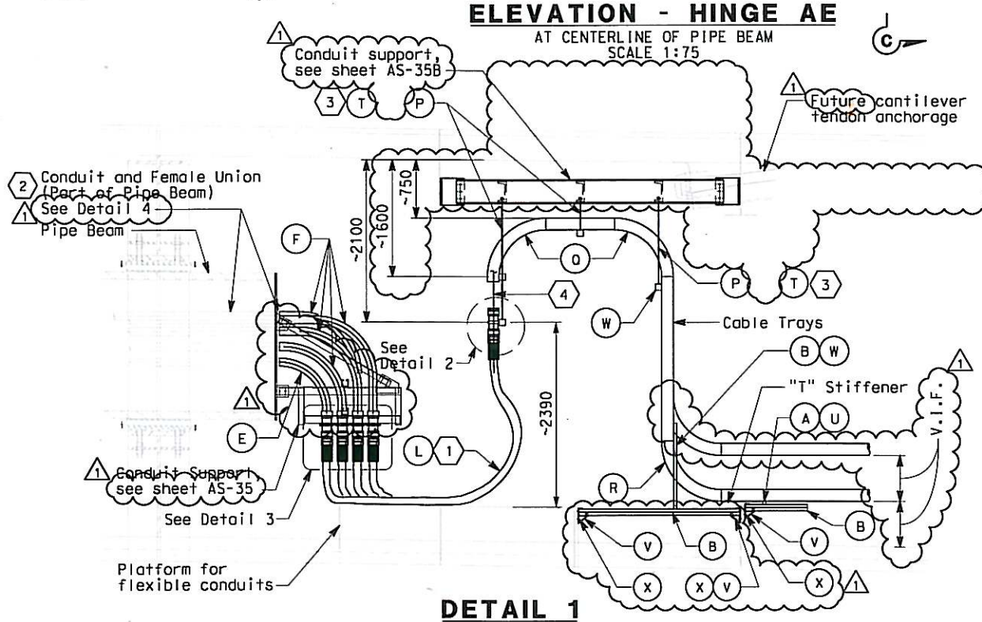

DETAIL 1

SCALE 1:40

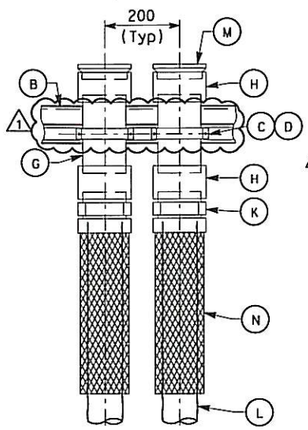

DETAIL 2

NO SCALE

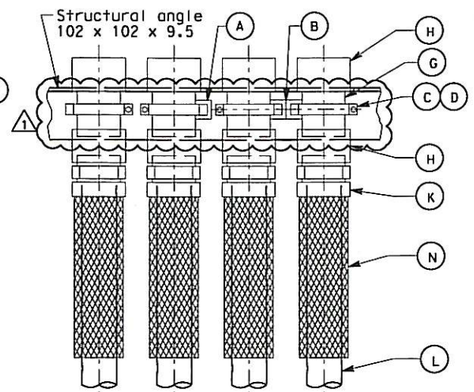

DETAIL 3

NO SCALE

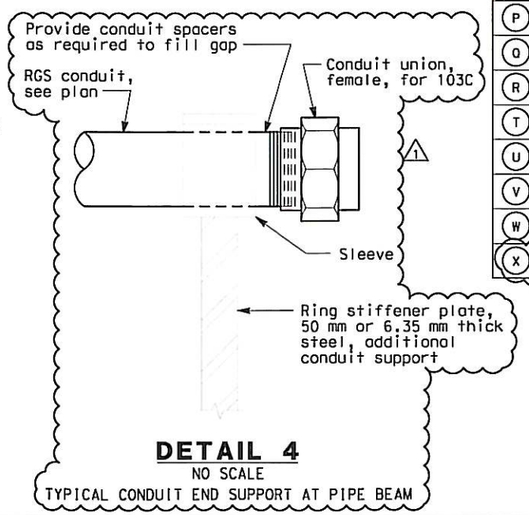

DETAIL 4

NO SCALE
TYPICAL CONDUIT END SUPPORT AT PIPE BEAM

MATERIAL LIST

Item No.	Description
A	Strut channel 41 mm x 41 mm
B	Strut channel combination 41 mm x 82 mm
C	Strut channel spring nut, lockwasher and hex bolt
D	Strut channel conduit clamp for 103 mm
E	Conduit elbow for 103 mm (Radius= 610 mm)
F	Conduit elbow for 103 mm (Radius= 752 mm)
G	Conduit nipple, 103 mm
H	Conduit coupling, 103 mm
J	DELETED
K	Connector, straight liquidtight flexible conduit for 103 mm
L	Liquidtight flexible conduit, 103 mm
M	Insulated bushed nipple for 103 mm conduit
N	Strain relief grips (or AMTEC conduit riser grip) for flexible conduit, 103 mm
P	Threaded steel hanger rod, 12 mm diameter
O	Cable tray vertical outside bend
R	Cable tray vertical inside bend
T	Strut channel spring nut, tee-head bolt
U	Strut channel cable tray clamp for ladder or solid bottom tray
V	Bracket for 82 mm X 82 mm Strut Channel
W	Vertical tray hanger with splice plate hardware (bolted to side rail)
X	13Ø Bolt thru 'T' stiffener web/platform support w/ nut and washer

SHEET NOTES:

1. Hinge AE electrical design is based on the maximum expansion joint movement opening of 1243 mm.
2. Conduits through pipe beam shall be part of the pipe beam assembly. Conduit shall be welded together to form a continuous conduit inside the pipe beam, length as specified. The weld shall be smooth on the outside and free of burrs inside the conduit. Conduit fittings, like coupling, etc. to form a continuous conduit shall not be permitted as alternative. Pipe beam supplied by Skyway Structure.

   The intent of the conduit design is to be able to remove the entire length of conduit inside the pipe beam, in case maintenance is required inside the pipe beam assembly.
3. Cable tray hangers shall be located to provide working space in front of cantilever tendon anchorage. Field to adjust location accordingly, additional supports as required.
4. All cable/cables entering the liquidtight conduits from the cable trays shall be provided with strain relief cable/cables grips (or AMTEC conduit riser grip) attached from the vertical cable tray rungs.

NOTES:

1. Minimum radius of cable tray fittings shall be 610 mm.
2. Minimum radius of 103 mm conduit bends shall be 610 mm.
3. Cables/circuits passing through the hinge locations shall be provided with cable identification tag at both ends of Hinge.
4. For additional work related not shown on this drawing, see Electrical Special Provisions.
5. For Sections A-A and B-B, see sheet E-221B.
6. Sections C-C and D-D, see sheet E-221C.

REQUEST FOR INFORMATION NOT ADDRESSED IN THIS CCO REMAIN IN FORCE

MARK	DATE	DESCRIPTIONS	BY	CH'D	CCO#
1	03/27/13	ADDITIONAL SAS MISCELLANEOUS ELECTRICAL CHANGES	RR RSB	RG	19152

REVISIONS

CONTRACT CHANGE ORDER NO. 191 S2
SHEET 22 OF 40

DETAILS
SAS SUPERSTRUCTURE AND SKYWAY STRUCTURE GIRDER INTERFACE EASTBOUND HINGE AE

SCALE: 1:200

E-221A

2	EJL	2/04	EJL	1/04
1	REVISED BY	DATE REVISED	CYF	DATE 12/03

CALCULATED/DESIGNED BY
CHECKED BY

DESIGN OVERSIGHT
BEHZAD GOLEMOHAMMADI

STATE OF CALIFORNIA - DEPARTMENT OF TRANSPORTATION
Caltrans

LAST REVISION 03-27-13
DATE PLOTTED => 3/29/2013
TIME PLOTTED => 10:37:45 AM

FOR REDUCED PLANS ORIGINAL SCALE IS IN MILLIMETERS 0 20 40 60 80

DGN FILE =>04-0120f1_0241R01.dgn
USERNAME =>Melsheimer

CU 04251 | EA 0120F1

DIST	COUNTY	ROUTE	KILOMETER POST TOTAL PROJECT	SHEET No	TOTAL SHEETS
04	SF	80	13.2/13.9	242 R1	1204

REGISTERED ELECTRICAL ENGINEER 2/6/04 DATE

12-6-04
PLANS APPROVAL DATE

REGISTERED PROFESSIONAL ENGINEER JENS ERLINGSSON No. 8249 Exp. 9/30/06 ELECTRICAL STATE OF CALIFORNIA

PB POWER, Inc.
A Parsons Brinckerhoff Company
303 Second St., Suite 700N
San Francisco, CA 94107-1317

The State of California or its officers or agents shall not be responsible for the accuracy or completeness of electronic copies of this plan sheet.

Caltrans now has a web site! To get to the web site, go to http://www.dot.ca.gov

Caltrans Metric

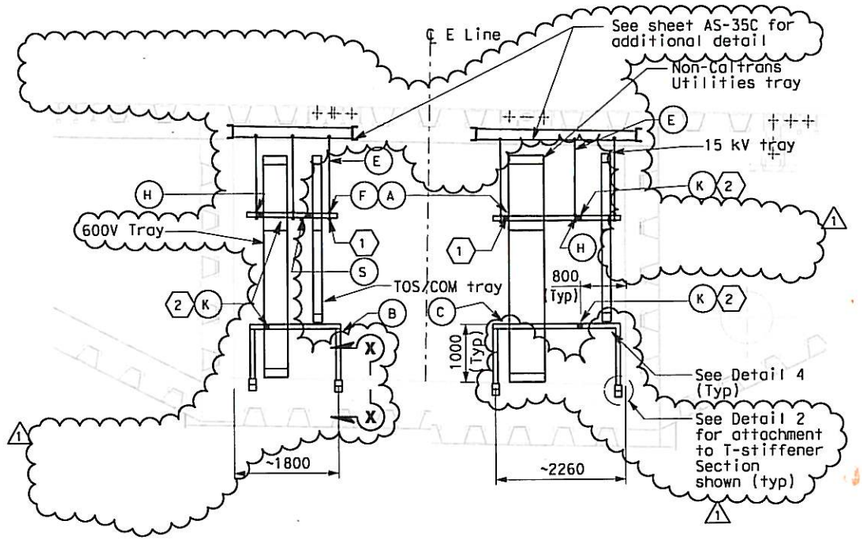

SECTION A-A
SCALE 1:50

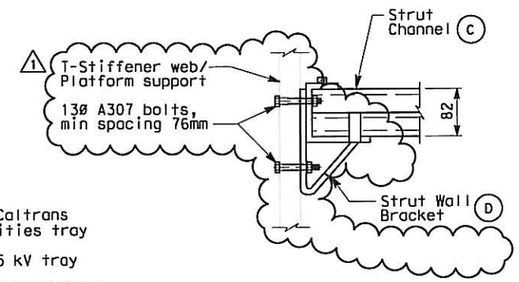

DETAIL 2
(TYPICAL BRACKET TRAY SUPPORT)
SCALE 1:5

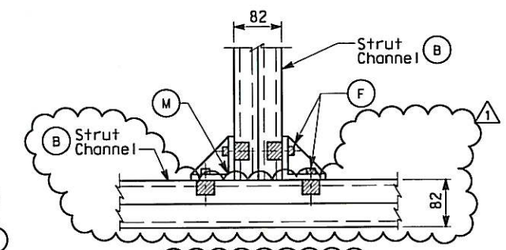

SECTION X-X
(TYPICAL BRACKET SUPPORT)
SCALE 1:5

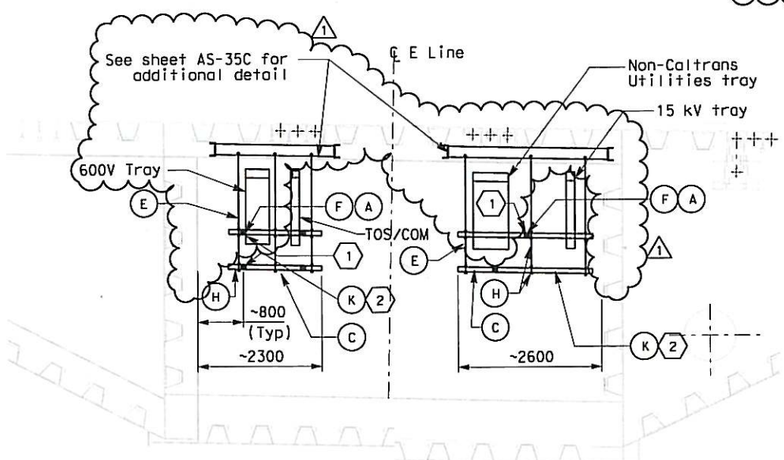

SECTION B-B
SCALE 1:50

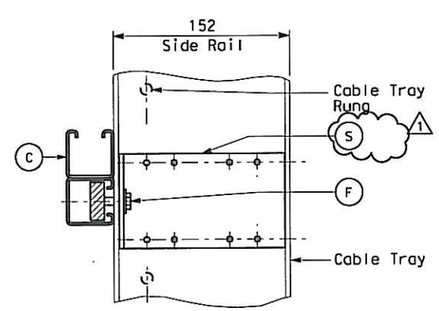

DETAIL 4
(TYPICAL VERTICAL CABLE TRAY SUPPORT)
SCALE 1:2.5

SHEET NOTES:

1. For seismic bracing, use strut channel installed diagonally to connect horizontal member of one hanger to horizontal member of adjacent hanger. See Sections A-A and B-B for connecting points.
2. For seismic bracing, use strut channel installed diagonally ~~to connect horizontal~~ member of tray support to adjacent support.

NOTES:

1. Materials, hardware and fittings shall be galvanized or stainless steel. For additional requirements, see Electrical Special Provisions.
2. References:
   - For plans and sections, see sheets E-186A and E-221A.

MATERIAL LIST

Item No.	Description	Remarks
A	Strut channel, 41 mm x 41 mm	Length as required
B	Strut channel, 41 mm x 82 mm	Length as required
C	Strut channel combination, 41 mm x 82 mm	Length as required
D	Strut wall bracket	
E	Threaded steel hanger rod, 12 mm diameter	Length as required
F	Strut channel spring nut, lockwasher and hex bolt	
H	Strut channel hanger trapeze hardware kit	
J	DELETED	
K	Strut channel brace fittings for horizontal seismic support	Length as required
M	Strut channel wing shape fitting	
R	DELETED	
S	Vertical tray hanger with splice plate hardware (Bolted to side rail)	

REQUEST FOR INFORMATION NOT ADDRESSED IN THIS CCO REMAIN IN FORCE					
1	03/27/13	ADDITIONAL SAS MISCELLANEOUS ELECTRICAL CHANGES	RR RSB	RG	191S2
MARK	DATE	DESCRIPTIONS	BY	CH'D	CCO#
		REVISIONS			

CONTRACT CHANGE ORDER NO. 191 S2
SHEET 23 OF 40

REGISTERED PROFESSIONAL ENGINEER DAVID H. OTO No. 10699 Exp. 06/30/2013 ELECTRICAL STATE OF CALIFORNIA

FOR REVISION ONLY

DETAILS
SAS SUPERSTRUCTURE AND SKYWAY STRUCTURE GIRDER INTERFACE EASTBOUND HINGE AE TRAY SUPPORTS
SCALE AS NOTED

E-221B

1	03-27-13	DATE PLOTTED => 3/29/2013	LAST REVISION
		TIME PLOTTED => 10:38:15 AM	

STATE OF CALIFORNIA - DEPARTMENT OF TRANSPORTATION
Caltrans

DESIGN OVERSIGHT: BEHZAD GOLEMOHAMMADI
CALCULATED/DESIGNED BY: EJL
CHECKED BY: CYF
REVISED BY: EJL
DATE REVISED: 2/04
DATE 12/03: 1/04

FOR REDUCED PLANS ORIGINAL SCALE IS IN MILLIMETERS 0 20 40 60 80

DGN FILE =>04-0120f1_0242R01.dgn
USERNAME =>Melsheimer

CU 04251 | EA 0120F1

DIST	COUNTY	ROUTE	KILOMETER POST TOTAL PROJECT	SHEET No	TOTAL SHEETS
04	SF	80	13.2/13.9	243 R3	1204

REGISTERED ELECTRICAL ENGINEER 2/6/04 DATE

12-6-04
PLANS APPROVAL DATE

REGISTERED PROFESSIONAL ENGINEER JENS ERLINGSSON No. 8249 Exp. 9/30/06 ELECTRICAL STATE OF CALIFORNIA

PB POWER, Inc.
A Parsons Brinckerhoff Company
303 Second St., Suite 700N
San Francisco, CA 94107-1317

The State of California or its officers or agents shall not be responsible for the accuracy or completeness of electronic copies of this plan sheet.

Caltrans now has a web site! To get to the web site, go to http://www.dot.ca.gov

Caltrans Metric

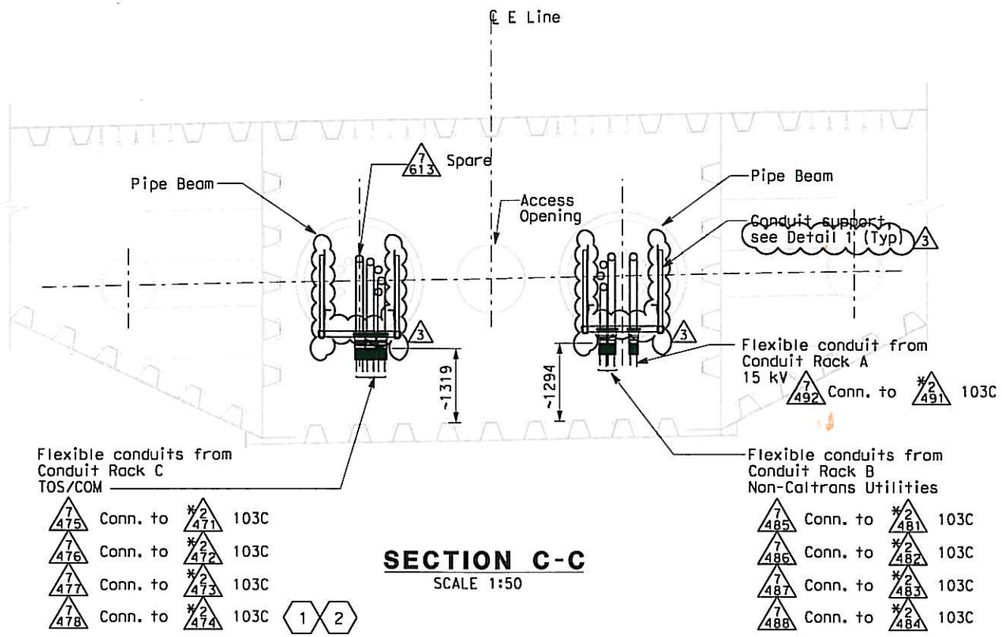

SECTION C-C
SCALE 1:50

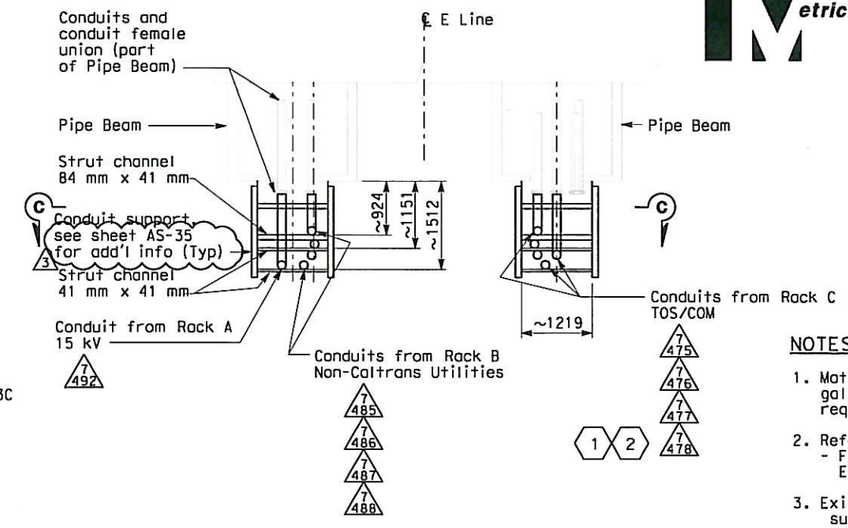

PLAN - DETAIL 1
SCALE 1:50

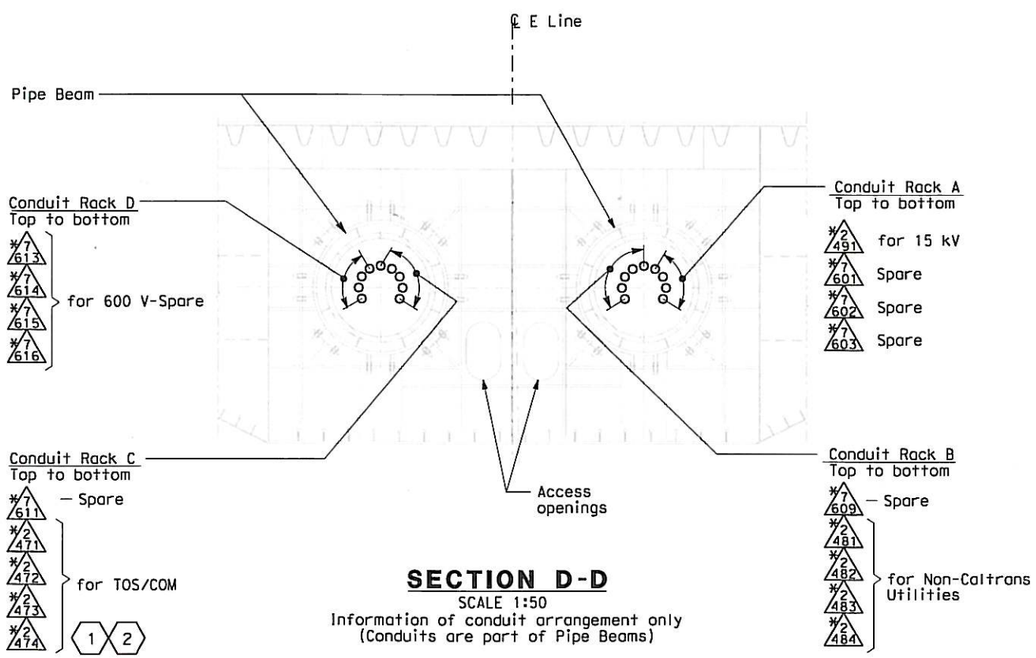

SECTION D-D
SCALE 1:50
Information of conduit arrangement only
(Conduits are part of Pipe Beams)

NOTES:

1. Materials, hardware and fittings shall be galvanized or stainless steel. For additional requirements, see Electrical Special Provisions.
2. References:
   - For Westbound plans and sections, see sheets E-186A and E-221A.
3. Existing conduits (*) inside pipe beam are supplied in Skyway contract.

SHEET NOTES:

1. Furnish and install 4-25.4 mm innerducts inside TOS/COM conduits (*2474, 7478) and 1-25.4 mm innerduct per BASE fiber optic cable in TOS/COM cable tray.
2. Furnish and install BASE fiber optic cable in innerduct inside TOS/COM conduit and cable tray. See sheet E-1101.

REGISTERED PROFESSIONAL ENGINEER DAVID H. OTO No. 10699 Exp. 06/30/2013 ELECTRICAL STATE OF CALIFORNIA
FOR REVISION ONLY 3

REGISTERED PROFESSIONAL ENGINEER SYN YEE CHIN No. 18186 Exp. 09/30/2011 ELECTRICAL STATE OF CALIFORNIA
FOR REVISION ONLY 2

REGISTERED PROFESSIONAL ENGINEER S. A. ESTOOLE, JR. No. E-10151 Exp. 12/31/2008 ELECTRICAL STATE OF CALIFORNIA
FOR REVISION ONLY 1

REQUEST FOR INFORMATION NOT ADDRESSED IN THIS CCO REMAIN IN FORCE

MARK	DATE	DESCRIPTIONS	BY	CH'D	CCO#
3	03/27/13	ADDITIONAL SAS MISCELLANEOUS ELECTRICAL CHANGES	RR RSB	RG	191S2
2	03/01/11	BASE INTEGRATION	RSB	WB	150
1	02/25/08	CABLE TRAY CHANGES	JD	RG SE	42S1

REVISIONS

CONTRACT CHANGE ORDER NO. 191 S2
SHEET 24 OF 40

DETAILS
SAS SUPERSTRUCTURE AND SKYWAY STRUCTURE GIRDER INTERFACE EASTBOUND HINGE AE SUPPORTS
SCALE AS NOTED

E-221C

CALCULATED/ DESIGNED BY	CYF	DATE 12/03	REVISED BY	EJL
CHECKED BY	EJL	1/04	DATE REVISED	2/04

DESIGN OVERSIGHT
BEHZAD GOLEMOHAMMADI

STATE OF CALIFORNIA - DEPARTMENT OF TRANSPORTATION
Caltrans

THIS PLAN ACCURATE FOR ELECTRICAL WORK ONLY.

ALL DIMENSIONS ARE IN MILLIMETERS UNLESS OTHERWISE SHOWN

FOR REDUCED PLANS ORIGINAL SCALE IS IN MILLIMETERS 0 20 40 60 80

DGN FILE =>04-0120f1_0243R03.dgn
USERNAME =>Melsheimer

CU 04251 | EA 0120F1

LAST REVISION 03-27-13
DATE PLOTTED => 3/29/2013
TIME PLOTTED => 10:38:32 AM

DIST	COUNTY	ROUTE	KILOMETER POST TOTAL PROJECT	SHEET No	TOTAL SHEETS
04	SF	80	13.2/13.9	271 S2R2	1204

REGISTERED ELECTRICAL ENGINEER Syn Yee Chin 2/24/10 DATE

PLANS APPROVAL DATE

REGISTERED PROFESSIONAL ENGINEER SYN YEE CHIN No. 18186 Exp. 09/30/2011 ELECTRICAL STATE OF CALIFORNIA

PB AMERICAS, Inc.
A Parsons Brinckerhoff Company
303 Second St., Suite 700N
San Francisco, CA 94107-1317

The State of California or its officers or agents shall not be responsible for the accuracy or completeness of electronic copies of this plan sheet.

Caltrans now has a web site! To get to the web site, go to http://www.dot.ca.gov

REGISTERED PROFESSIONAL ENGINEER DAVID H. OTO No. 10699 Exp. 06/30/2015 ELECTRICAL STATE OF CALIFORNIA 1 2

FOR REVISION ONLY

NOTES:

1. References:
   - For utility panel UP-210 schedule, see sheet E-278.
   - For conduit and cable tray schedules, see sheets starting at E-401.
   - For lighting fixture schedule, see sheet E-273.
   - For vertical conduit runs support system, see sheet E-287.
   - For lighting installation details, see sheet E-267.
2. All conduits and fittings routed exposed at grating shall be rigid galvanized steel, PVC coated, UNO.
3. Fixture mounting height elevation shall be 2.125 m above floor/platform elevation UNO.

REQUEST FOR INFORMATION NOT ADDRESSED IN THIS CCO REMAIN IN FORCE

MARK	DATE	DESCRIPTIONS	BY	CH'D	CCO#
2	10/23/13	ADDITIONAL SAS MISCELLANEOUS ELECTRICAL CHANGES	RR RSB	RG	191S2
1	01/25/12	ELECTRICAL CHANGES FOR ELEVATION 53 IMPROVEMENTS	TW	RG	190
0	02/24/10	TOWER UTILITY PANELS	JS TW	RG SYC	70

REVISIONS

CONTRACT CHANGE ORDER NO. 191 S2
SHEET 25 OF 40

SHEET NOTES:

1. Bolt lengths to be long enough to fully engage all materials through which they pass, including all washers and nuts, and where attaching to structural steel be anchored in threads to a depth at least 1.2 times the bolt diameter. Holes in structural members shall be drilled and bottom tapped to 5 mm minimum deeper than the depth to which the bolt will engage the steel.
2. 152 x 152mm, 316SS, Nema 4X wireway. with bracket hanger for mounting.
3. 102 x 102mm, 316SS, Nema 4X wireway. with bracket hanger for mounting.
4. Install #2 bare copper wire (bonding jumper) inside conduit and connect to conduit insulated grounding bushing and to enclosure grounding terminal. Use servit post Burndy Type KC or equal inside bottom of the enclosure when no factory grounding terminal is provided. See Detail 8, sheet E-111B for similar installation.

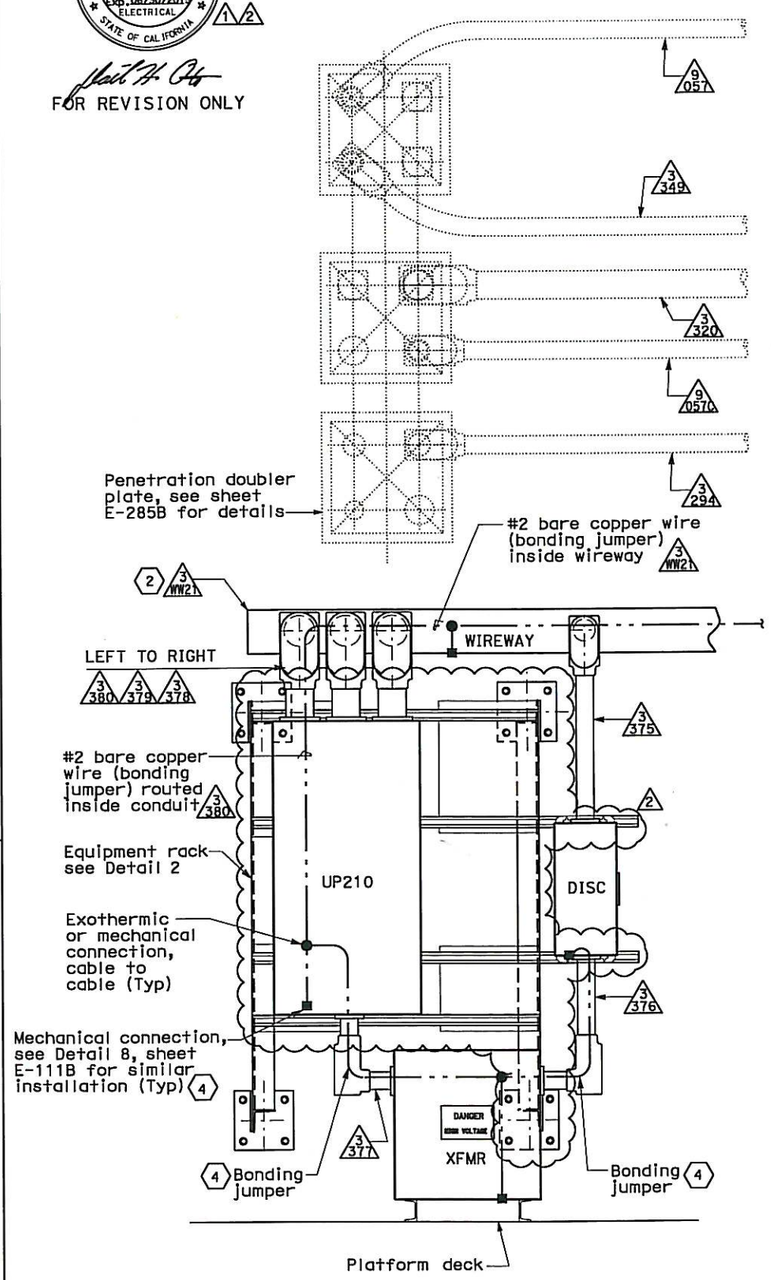

ELEVATION

DETAIL 1
SCALE 1:10

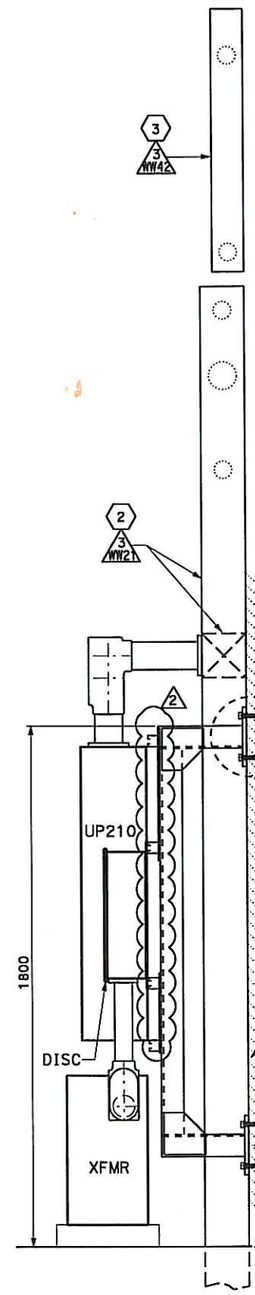

SIDE VIEW
Conduit not shown for clarity

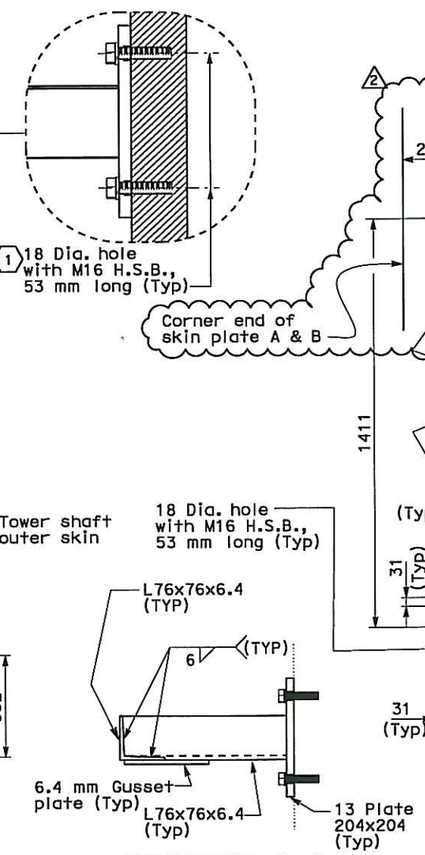

SECTION A-A
SCALE 1:5

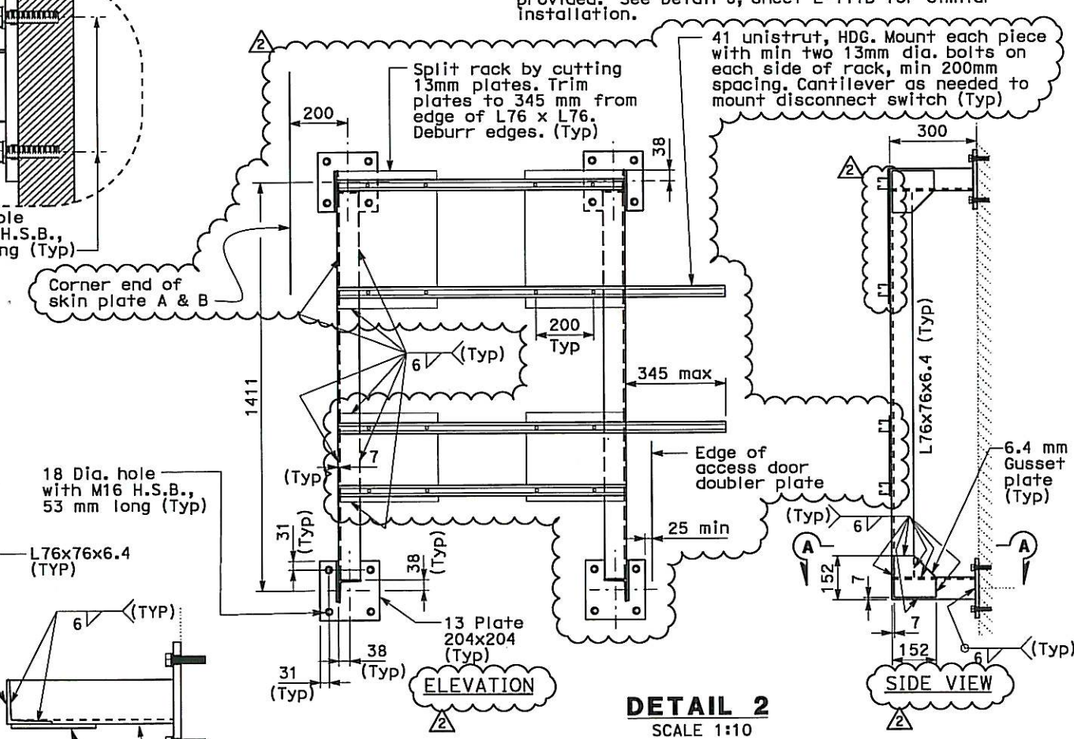

DETAIL 2
SCALE 1:10

DETAILS
TOWER AND SUSPENSION CABLE
TOWER POWER AND LIGHTING
SCALE: AS NOTED

E-264C

ALL DIMENSIONS ARE IN MILLIMETERS UNLESS OTHERWISE SHOWN.

THIS PLAN ACCURATE FOR ELECTRICAL WORK ONLY.

FOR REDUCED PLANS ORIGINAL SCALE IS IN MILLIMETERS 0 20 40 60 80

DGN FILE =>04-0120f1_0271S02R02.dgn
USERNAME =>Llorico

CU 04251 EA 0120F1

STATE OF CALIFORNIA - DEPARTMENT OF TRANSPORTATION Caltrans

DESIGN OVERSIGHT BEHZAD GOLEMOHAMMADI

CALCULATED/DESIGNED BY FK DATE 10/01 REVISED BY
CHECKED BY EDC 11/01 DATE REVISED

LAST REVISION 10-23-13 DATE PLOTTED => 21-OCT-2013 TIME PLOTTED => 17:27

DIST	COUNTY	ROUTE	KILOMETER POST TOTAL PROJECT	SHEET No	TOTAL SHEETS
04	SF	80	13.2/13.9	271 S5R3	1204

REGISTERED ELECTRICAL ENGINEER DATE

PLANS APPROVAL DATE

REGISTERED PROFESSIONAL ENGINEER FADI WALIEDDINE No. 11465 Exp. 12/31/2009 ELECTRICAL STATE OF CALIFORNIA

PB AMERICAS, Inc.
A Parsons Brinckerhoff Company
303 Second St., Suite 700N
San Francisco, CA 94107-1317

The State of California or its officers or agents shall not be responsible for the accuracy or completeness of electronic copies of this plan sheet.

Caltrans now has a web site! To get to the web site, go to http://www.dot.ca.gov

Caltrans Metric

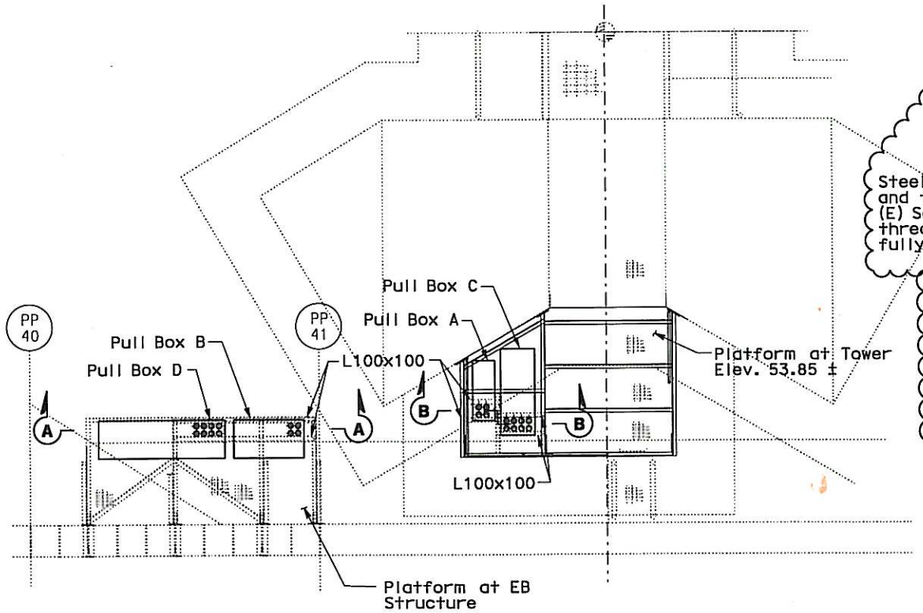

PLAN-PLATFORM AT ELEV 53.85

NO SCALE

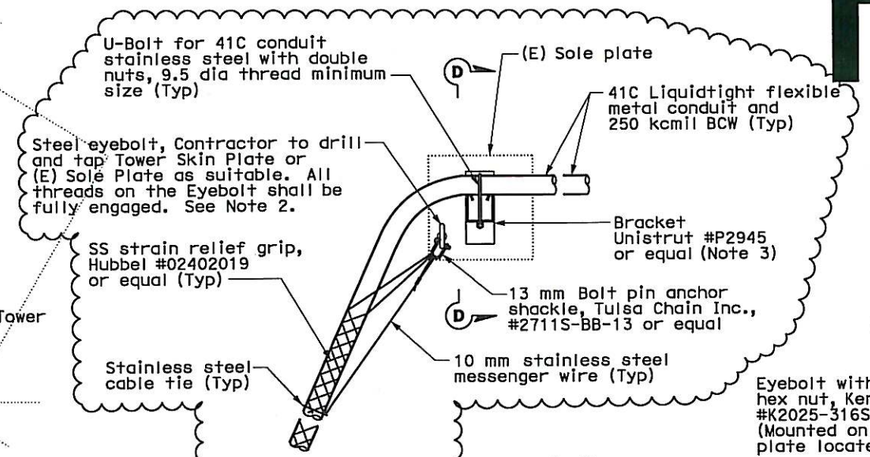

SECTION Y-Y

NO SCALE

NOTES:

1. For reference drawing see Sheet E-264A.
2. Eyebolt location to suit field condition.
3. Bracket may be rotated 180 degree if U-bolt is not available with longer thread length. Conduit shall be placed on top of channel strut.

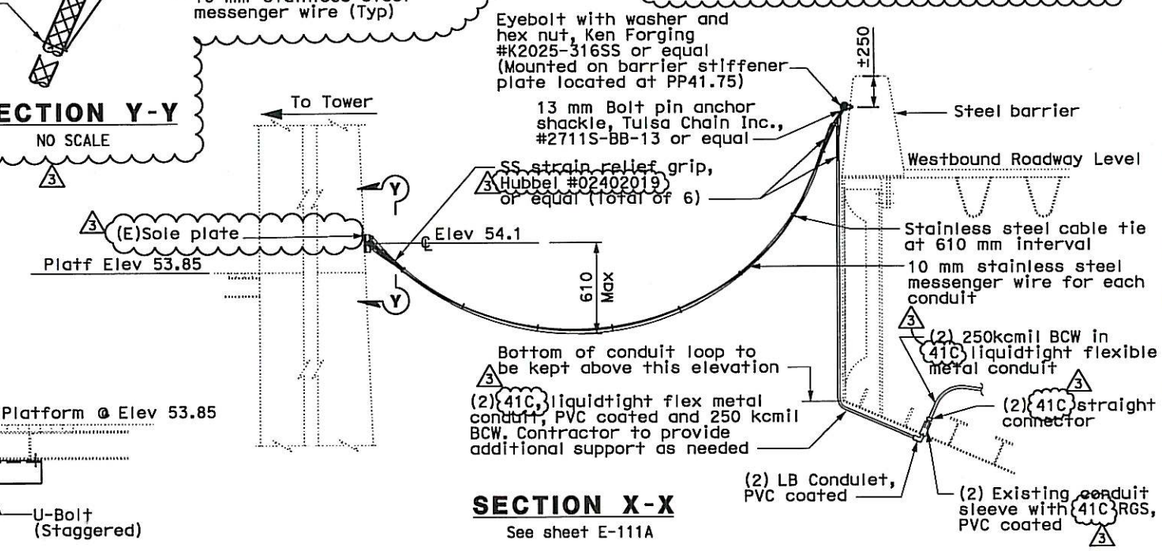

SECTION X-X

See sheet E-111A

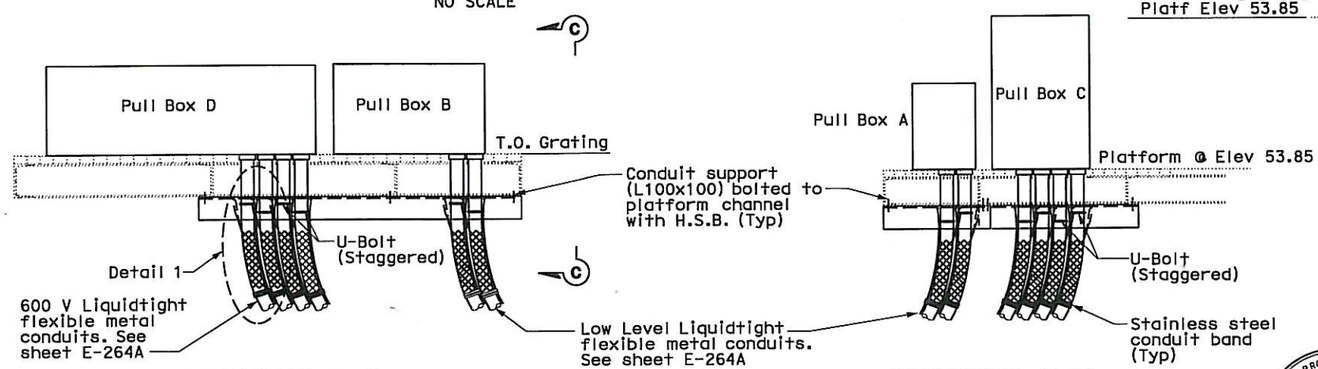

SECTION A-A

NO SCALE

SECTION B-B

NO SCALE

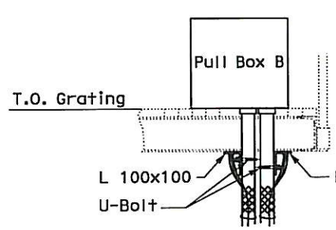

SECTION C-C

NO SCALE

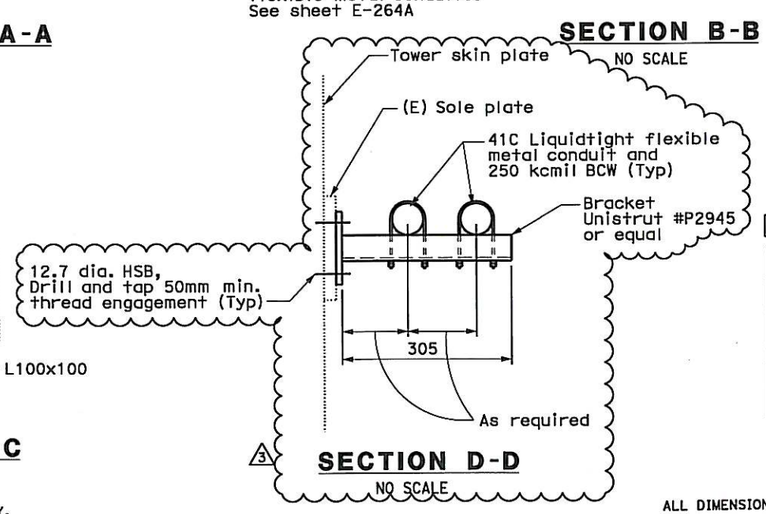

SECTION D-D

NO SCALE

REGISTERED PROFESSIONAL ENGINEER DAVID H. OTO No. 10699 Exp. 06/30/2015 ELECTRICAL STATE OF CALIFORNIA

FOR REVISION ONLY

REQUEST FOR INFORMATION NOT ADDRESSED IN THIS CCO REMAIN IN FORCE

MARK	DATE	DESCRIPTIONS	BY	CH'D	CCO#
3	10/23/13	ADDITIONAL SAS MISCELLANEOUS ELECTRICAL CHANGES	RSB RR	RG	191S2
2	07/31/12	ELECTRICAL GROUNDING	RSB	RG	75
1	04/27/12	ELECTRICAL GROUNDING	RSB RM	RG	75
0	03/30/09	SERVICE PLATFORM ELECTRICAL CHANGES	RR RY	RG FW	55

REVISIONS

CONTRACT CHANGE ORDER NO. 191 S2
SHEET 26 OF 40

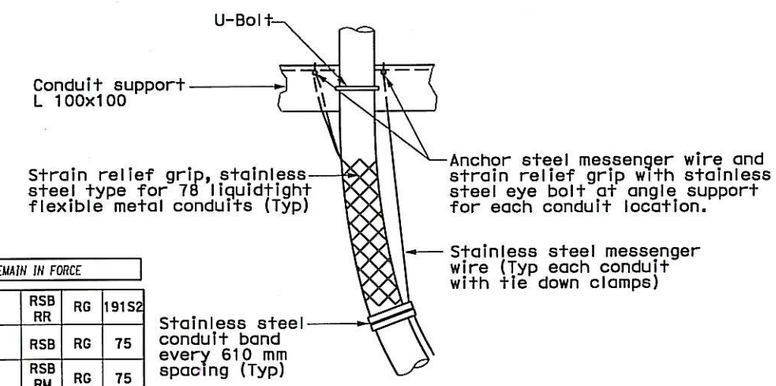

DETAIL 1

(TYPICAL)

DETAILS
TOWER AND SUSPENSION CABLE

NO SCALE

E-264F

THIS PLAN ACCURATE FOR ELECTRICAL WORK ONLY.

ALL DIMENSIONS ARE IN MILLIMETERS UNLESS OTHERWISE SHOWN.

FOR REDUCED PLANS ORIGINAL SCALE IS IN MILLIMETERS 0 20 40 60 80

DGN FILE =>04-0120f1_0271S05R03.dgn
USERNAME =>Llorico

CU 04251 | EA 0120F1

LAST REVISION 10-23-13 | DATE PLOTTED => 21-OCT-2013 TIME PLOTTED => 16:52

STATE OF CALIFORNIA - DEPARTMENT OF TRANSPORTATION

DESIGN OVERSIGHT BEHZAD GOLEMOHAMMADI

CALCULATED/DESIGNED BY | CHECKED BY

DATE | REVISED BY | DATE REVISED

DIST	COUNTY	ROUTE	KILOMETER POST TOTAL PROJECT	SHEET No	TOTAL SHEETS
04	SF		13.2/13.9	271 S10R1	1204

REGISTERED ELECTRICAL ENGINEER 12/21/11 DATE

PLANS APPROVAL DATE

REGISTERED PROFESSIONAL ENGINEER DAVID H. OTO No. 10699 Exp. 06/30/2013 ELECTRICAL STATE OF CALIFORNIA

PB AMERICAS, Inc.
A Parsons Brinckerhoff Company
303 Second St., Suite 700N
San Francisco, CA 94107-1317

The State of California or its officers or agents shall not be responsible for the accuracy or completeness of electronic copies of this plan sheet.

Caltrans now has a web site! To get to the web site, go to http://www.dot.ca.gov

Caltrans Metric

REQUEST FOR INFORMATION NOT ADDRESSED IN THIS CCO REMAIN IN FORCE

MARK	DATE	DESCRIPTIONS	BY	CH'D	CCO#
1	10/23/13	ADDITIONAL SAS MISCELLANEOUS ELECTRICAL CHANGES	RG	DO	191S2
0	01/25/12	ELECTRICAL CHANGES FOR ELEVATION 53 IMPROVEMENTS	TW	RG	190

REVISIONS

CONTRACT CHANGE ORDER NO. 191 S2
SHEET 27 OF 40

REGISTERED PROFESSIONAL ENGINEER DAVID H. OTO No. 10699 Exp. 06/30/2015 ELECTRICAL STATE OF CALIFORNIA 1

FOR REVISION ONLY

SHEET NOTES:

1. See sheet E-285B for penetration doubler plate and schedule and details.
2. For conduits and grounding route throught to penetrations at these elevation see E-111A, E-264, E-264B, E-281, E-293 and E-366.
3. Liquidtight flexible metal conduit May be used where rigid conduit is not feasible to install due to the available space to bend rigid conduit.

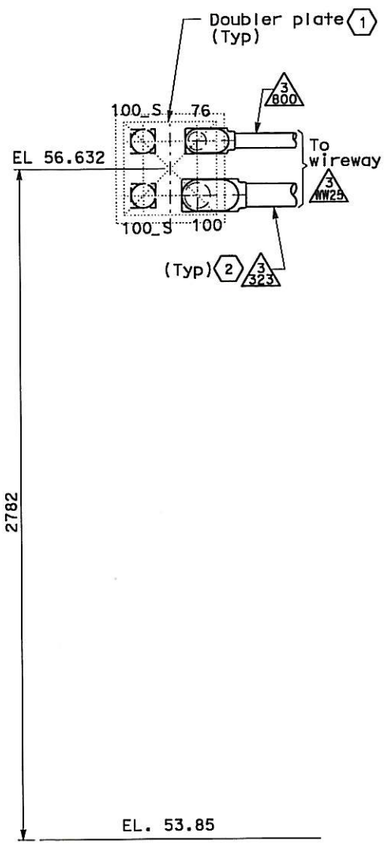

DETAIL-1
NW Penetrations

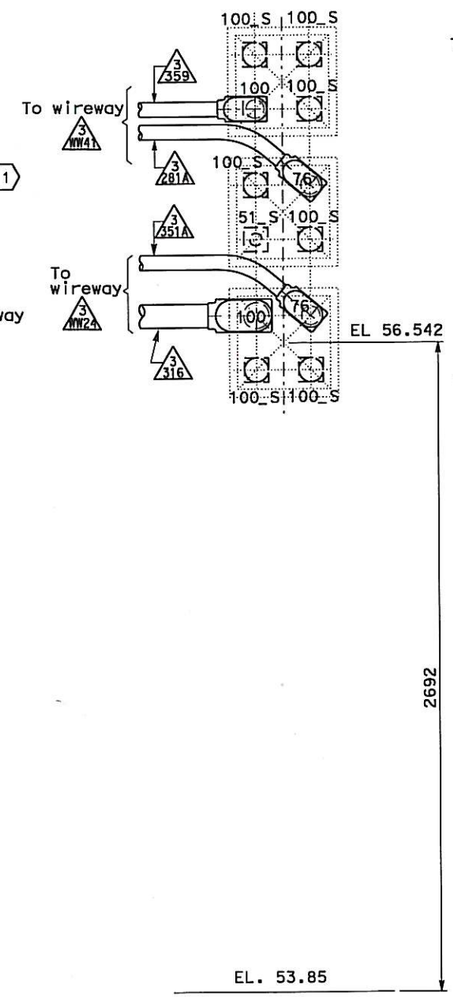

DETAIL-2
SW Penetrations

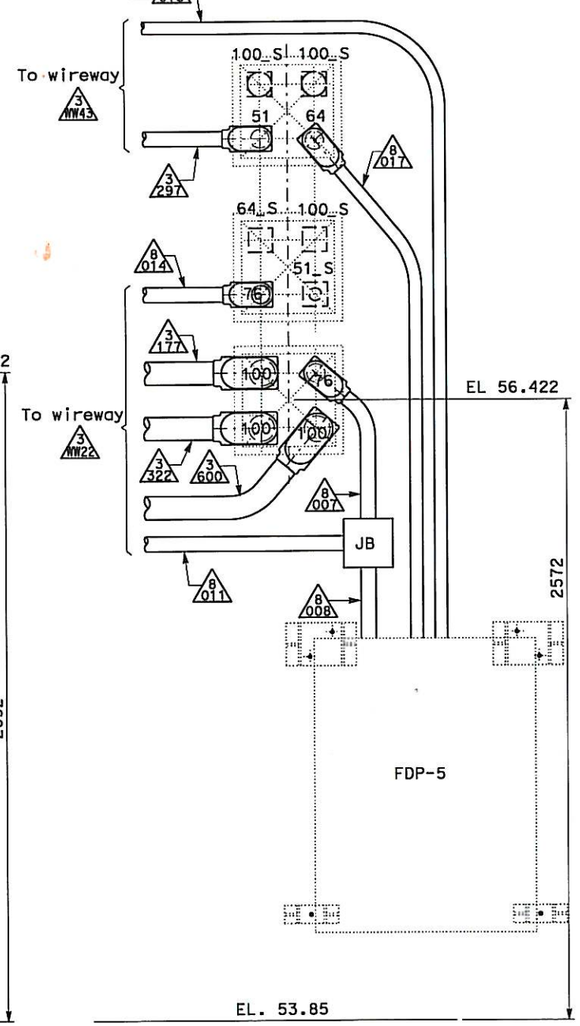

DETAIL-3
NE Penetrations

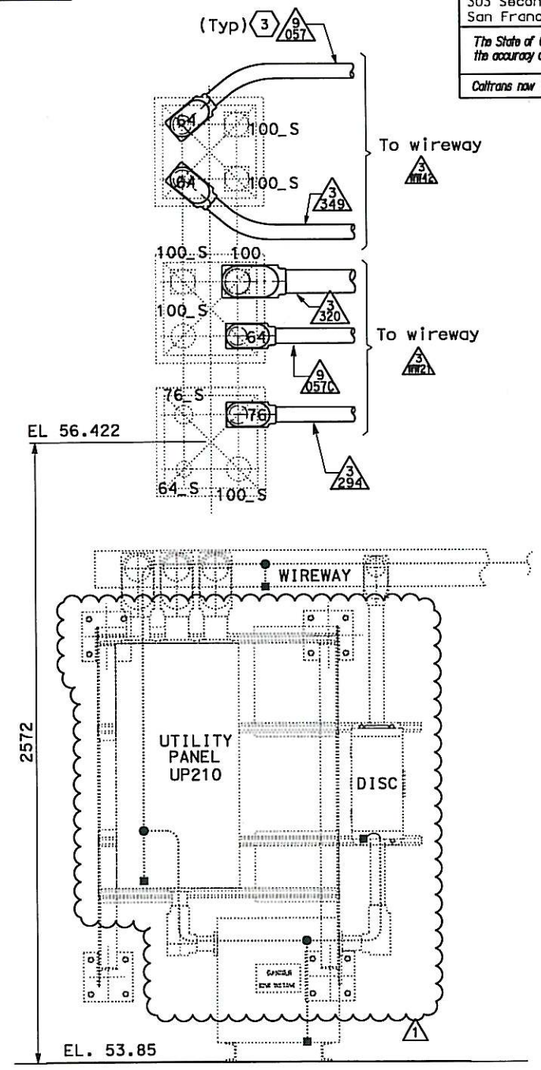

DETAIL-4
SE Penetrations

DETAILS
TOWER AND SUSPENSION CABLE
TOWER POWER AND LIGHTING

SCALE: AS NOTED

E-264L

THIS PLAN ACCURATE FOR ELECTRICAL WORK ONLY.

ALL DIMENSIONS ARE IN MILLIMETERS UNLESS OTHERWISE SHOWN

FOR REDUCED PLANS ORIGINAL SCALE IS IN MILLIMETERS 0 20 40 60 80

DGN FILE =>04-0120f1_0271S10r01.dgn
USERNAME =>Llorico

CU 04251

EA 0120F1

STATE OF CALIFORNIA - DEPARTMENT OF TRANSPORTATION
Caltrans

DESIGN OVERSIGHT: BEHZAD GOLEMOHAMMADI

CALCULATED/DESIGNED BY: XX
CHECKED BY: XX
DATE XX/XX
REVISED BY
DATE REVISED

LAST REVISION 10-23-13
DATE PLOTTED => 22-OCT-2013
TIME PLOTTED => 09:09

DIST	COUNTY	ROUTE	KILOMETER POST TOTAL PROJECT	SHEET No	TOTAL SHEETS
04	SF	80	13.2/13.9	272 R4	1204

REGISTERED ELECTRICAL ENGINEER 12/19/02 DATE

12-6-04
PLANS APPROVAL DATE

REGISTERED PROFESSIONAL ENGINEER JENS ERLINGSSON No. 8249 Exp. 9/30/06 ELECTRICAL STATE OF CALIFORNIA

PB POWER, Inc.
A Parsons Brinckerhoff Company
303 Second St., Suite 700N
San Francisco, CA 94107-1317

The State of California or its officers or agents shall not be responsible for the accuracy or completeness of electronic copies of this plan sheet.

Caltrans now has a web site! To get to the web site, go to http://www.dot.ca.gov

Caltrans Metric

REGISTERED PROFESSIONAL ENGINEER DAVID H. OTO No. 10699 Exp. 06/30/2015 ELECTRICAL STATE OF CALIFORNIA

FOR REVISION ONLY
4

REGISTERED PROFESSIONAL ENGINEER SYN YEE CHIN No. 18186 Exp. 09/30/2013 ELECTRICAL STATE OF CALIFORNIA

FOR REVISION ONLY
3

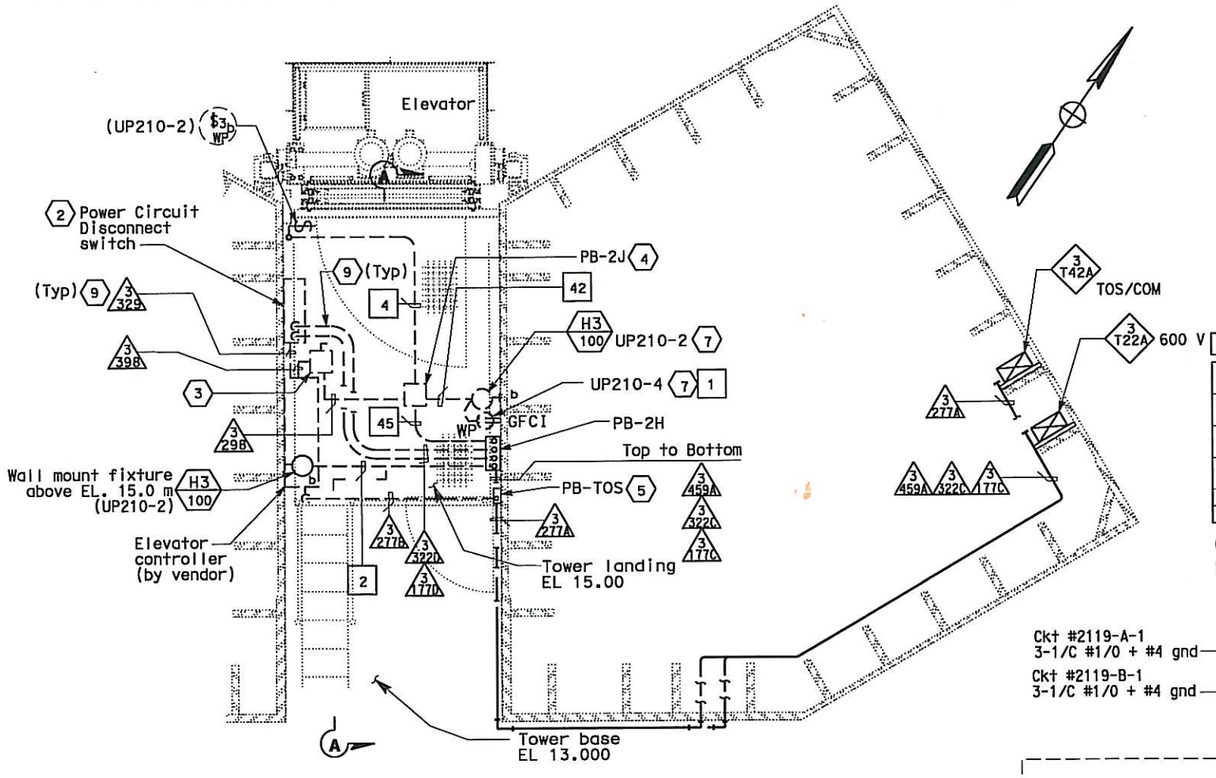

PLAN AT 13.00 M
TOWER BASE ELEVATOR ENCLOSURE
SCALE NTS

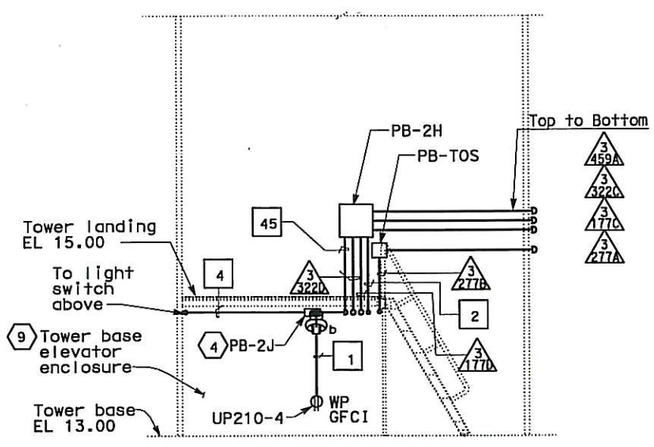

SECTION A-A
SCALE NTS

MARK	DATE	DESCRIPTIONS	BY	CH'D	CCO#
4	10/23/13	ADDITIONAL SAS MISCELLANEOUS ELECTRICAL CHANGES	RR	RG	191S2
3	05/25/12	SAS/SKYWAY MISCELLANEOUS ELECTRICAL CHANGES	TW	RG	191
2	12/23/09	TOWER BASE MEP	TW	RG FW	79
1	02/19/08	ELECTRICAL MODIFICATIONS	MP EL	RR	42

REQUEST FOR INFORMATION NOT ADDRESSED IN THIS CCO REMAIN IN FORCE

REVISIONS

CONTRACT CHANGE ORDER NO. 191 S2
SHEET 28 OF 40

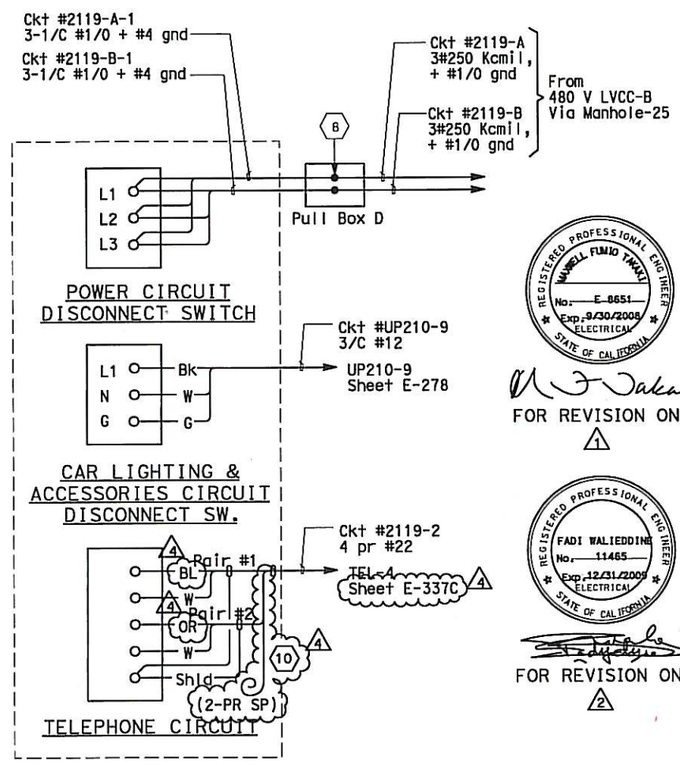

MAIN TOWER ELEVATOR PIT CONNECTION DIAGRAM

REGISTERED PROFESSIONAL ENGINEER WAYNE FUMIO TAKAKI No. E-8651 Exp. 9/30/2008 ELECTRICAL STATE OF CALIFORNIA

FOR REVISION ONLY
1

REGISTERED PROFESSIONAL ENGINEER FADI WALIEDDINE No. 11465 Exp. 12/31/2009 ELECTRICAL STATE OF CALIFORNIA

FOR REVISION ONLY
2

SHEET NOTES:

1. Deleted.
2. 480 V, 3 ø, 100 A, non-fused disconnect switch for elevator pit motor. Use liquid tight flexible conduit from disconnect switch to the motor.
3. 120 V single pole single throw disconnect switch for elevator lighting and fan. Mounted DS between power circuit disconnect switch and controller.
4. Mounte below Elevation 15.0 m grating.
5. PB-TOS for telephone communication lines.
6. Deleted.
7. For additional lighting and receptacles at EL. 9.00 M, see sheet E-266.
8. Splice conductors inside pull box "PB-D" see drawing E-264A
9. Conduit routing inside elevator enclosure may be adjusted to suit field condition.
10. Spare cable or conductor ends shall be coiled and taped. (4)

NOTES:

1. References:
   - For utility panel UP-210 schedule, see sheet E-278.
   - For types of pull boxes, splice boxes and enclosures, see sheets E-83 and E-169.
   - For conduit and cable tray schedules, see sheets starting at E-401.
   - For lighting fixture schedule, see sheet E-273.
   - For typical lighting installation details, see sheet E-267.
   - For typical conduit installation details, see sheet E-268.
2. Electrical conduits shall enter the tower shafts between stiffeners A3 and A4 only. For conduit entry details, see Structural Utility drawings
3. Fixture mounting height elevation shall be 2.4 m above floor/platform elevation UNO.
4. All conduits and fittings routed exposed at grating shall be rigid galvanized steel, PVC coated.
5. For other related work not shown on this sheet, see Electrical Special Provisions.

DETAILS
TOWER AND SUSPENSION CABLE
TOWER POWER AND LIGHTING
SCALE AS NOTED

E-265

REVISED BY	DATE REVISED

CALCULATED/DESIGNED BY	CHECKED BY
FK	EDC

DATE 10/01 | 11/01

DESIGN OVERSIGHT
BEHZAD GOLEMOHAMMADI

STATE OF CALIFORNIA - DEPARTMENT OF TRANSPORTATION
Caltrans

LAST REVISION 10-23-13
DATE PLOTTED => 21-OCT-2013
TIME PLOTTED => 16:52

THIS PLAN ACCURATE FOR ELECTRICAL WORK ONLY.

ALL DIMENSIONS ARE IN MILLIMETERS UNLESS OTHERWISE SHOWN.

FOR REDUCED PLANS ORIGINAL SCALE IS IN MILLIMETERS 0 20 40 60 80

DGN FILE =>04-0120f1_0272r04.dgn
USERNAME =>Llorico

CU 04251 | EA 0120F1

REQUEST FOR INFORMATION NOT ADDRESSED IN THIS CCO REMAIN IN FORCE					
5	10/28/13	ADDITIONAL SAS MISCELLANEOUS ELECTRICAL CHANGES	RR	RG	191S2
4	02/08/13	ADDITIONAL SAS/SKYWAY MISCELLANEOUS ELECTRICAL CHANGES	RR	RG	191S1
3	12/21/11	ELECTRICAL CHANGES FOR ELEVATION 53 IMPROVEMENTS	TW EC	RG RM	190
2	12/11/09	TOWER UTILITY PANELS	JS TW	RG FW	70
1	02/19/08	ELECTRICAL MODIFICATIONS	MP EL	RR	42
MARK	DATE	DESCRIPTIONS	BY	CH'D	CCO#

REVISIONS

CONTRACT CHANGE ORDER NO. 191 S2
SHEET 29 OF 40

REGISTERED PROFESSIONAL ENGINEER MASELL FUMIO TAKATA No. E 8651 Exp. 9/30/2008 ELECTRICAL STATE OF CALIFORNIA

FOR REVISION ONLY 1

REGISTERED PROFESSIONAL ENGINEER FADI WALIEDDINE No. 11465 Exp. 12/31/2009 ELECTRICAL STATE OF CALIFORNIA

FOR REVISION ONLY 2

Caltrans Metric

DIST	COUNTY	ROUTE	KILOMETER POST TOTAL PROJECT	SHEET No	TOTAL SHEETS
04	SF	80	13.2/13.9	288 R5	1204

12/19/02
REGISTERED ELECTRICAL ENGINEER DATE

12-6-04
PLANS APPROVAL DATE

REGISTERED PROFESSIONAL ENGINEER JENS ERLINGSSON No. 8249 Exp. 9/30/06 ELECTRICAL STATE OF CALIFORNIA

PB POWER, Inc.
A Parsons Brinckerhoff Company
303 Second St., Suite 700N
San Francisco, CA 94107-1317

The State of California or its officers or agents shall not be responsible for the accuracy or completeness of electronic copies of this plan sheet.

Caltrans now has a web site! To get to the web site, go to http://www.dot.ca.gov

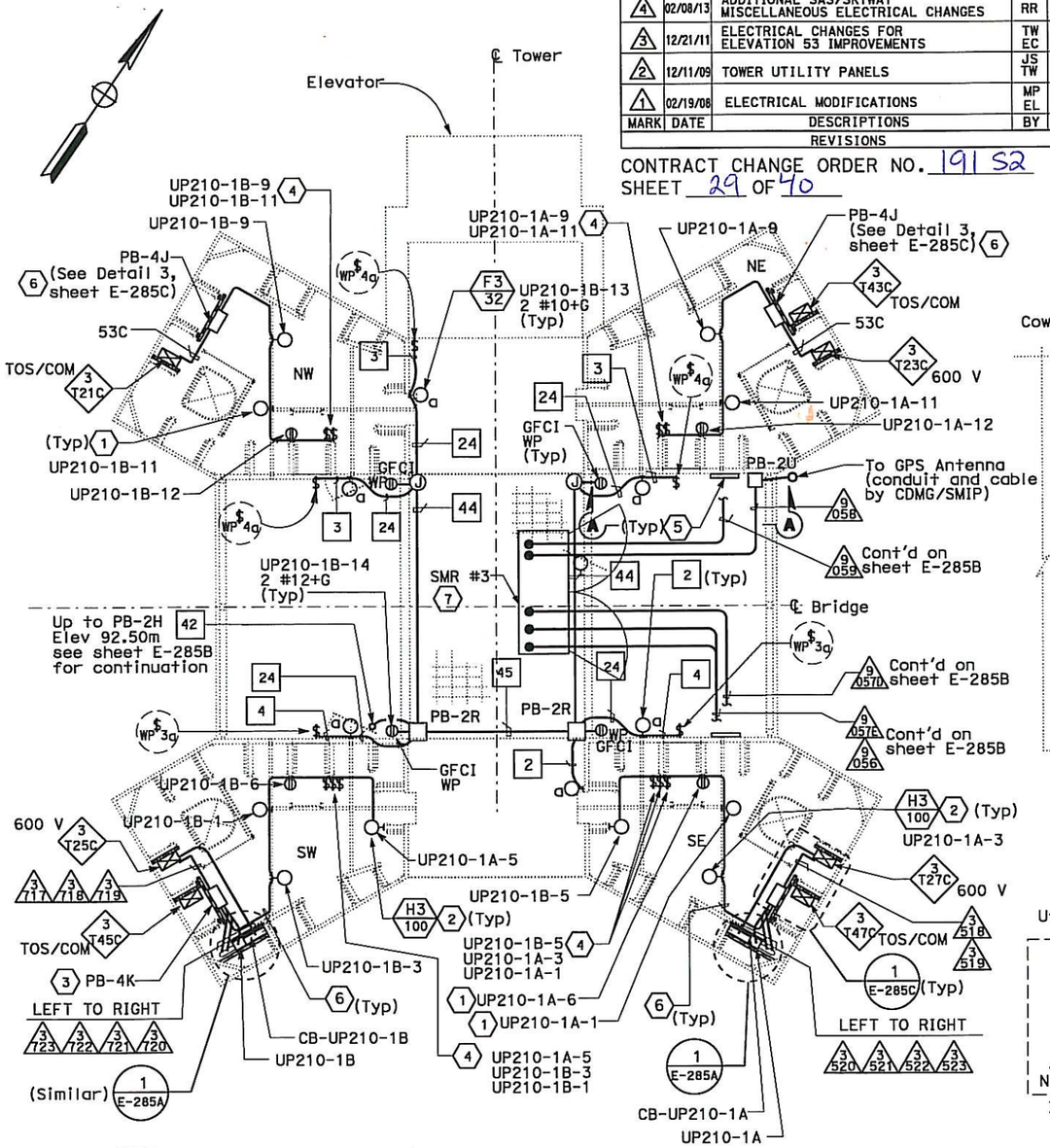

PLAN AT ELEVATION 89.85 m

SCALE: 1:40

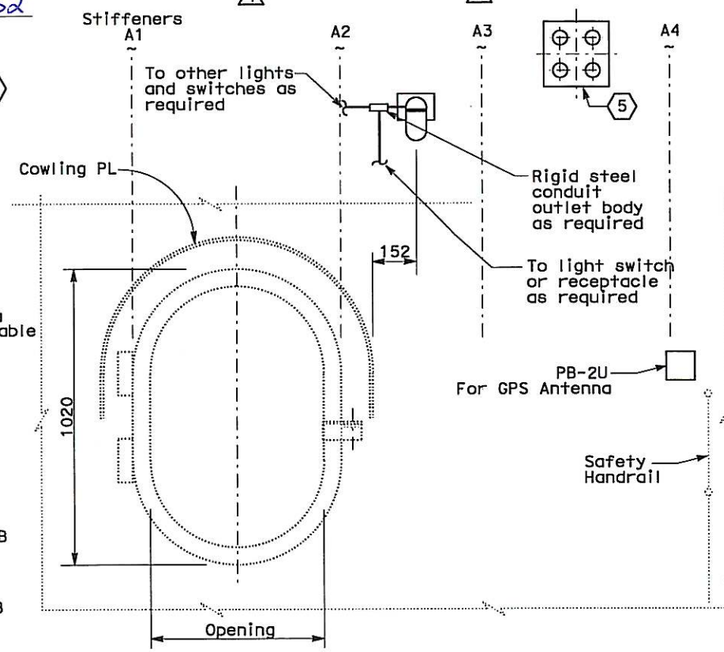

SECTION A-A
ACCESS OPENING DOOR

NO SCALE

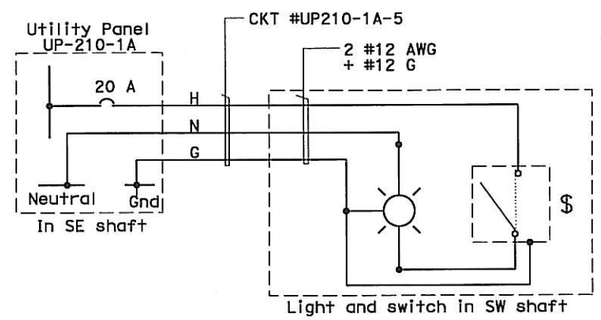

120 V ELECTRICAL EQUIPMENT TASK LIGHTING WIRING DIAGRAM

(Shown for circuit #UP210-1A-5 only, light in SE shaft is similar, but fed from UP-210-1B-5 in the SW shaft)

SHEET NOTES:

1. For tower shaft ladder and platform lighting and power layout, see section B-B on sheet E-284 & E-284A.
2. Light shown mounted under ceiling.
3. For shaft lighting and receptacle distribution box details, see Detail 1, Sheet E-285C.
4. Multiple switches at certain elevations. See sheets E-284 and E-284A and Detail 8 sheet E-268
5. See sheet E-285B for penetration doubler plate schedule and E-264L for details.
6. Numbers and sizes of conduits are field route to lights, receptacles and switches. See sheets E-284 and E-284A for conduit information.
7. For SMR #3 details, see sheet E-264E.

NOTES:

1. References:
   - For typical conduit ~~installation details~~, see sheets E-268, E-286A and E-286B. 5
   - For utility panel ~~UP-210-1A and UP-210-1B~~ panel schedules, see sheets E-279 and E-280.
   - For types of pull boxes, splice boxes and enclosures, see sheets E-83 and E-169.
   - For conduit and cable tray schedules, see sheets starting at E-401.
   - For lighting installation details, see sheet E-267.
   - For lighting fixture schedule, see sheet E-273.
2. All conduits and fittings routed exposed at grating shall be rigid galvanized steel, PVC coated.
3. Fixture mounting height elevation shall be 2.125 m above floor/platform elevation UNO.
4. Electrical conduits shall enter the tower shafts between stiffeners A3 and A4 only. For conduit entry details, see Structural Utility drawings.
5. For other related work not shown on this sheet, see Electrical Special Provisions.

REGISTERED PROFESSIONAL ENGINEER DAVID H. OTO No. 10699 Exp. 06/30/2015 ELECTRICAL STATE OF CALIFORNIA

FOR REVISION ONLY 3 4 5

THIS PLAN ACCURATE FOR ELECTRICAL WORK ONLY.

DETAILS
TOWER AND SUSPENSION CABLE
TOWER POWER AND LIGHTING

SCALE: AS NOTED

E-285

ALL DIMENSIONS ARE IN MILLIMETERS UNLESS OTHERWISE SHOWN

FOR REDUCED PLANS ORIGINAL SCALE IS IN MILLIMETERS 0 20 40 60 80

DGN FILE =>04-0120f1_0288r05.dgn
USERNAME =>Llorico

CU 04251 | EA 0120F1

LAST REVISION 10-28-13 | DATE PLOTTED => 28-OCT-2013 TIME PLOTTED => 17:43

STATE OF CALIFORNIA - DEPARTMENT OF TRANSPORTATION
Caltrans

DESIGN OVERSIGHT BEHZAD GOLEMOHAMMADI

CALCULATED/DESIGNED BY | CHECKED BY | FK | EDC | DATE 10/01 | 11/01 | REVISED BY | DATE REVISED

DIST	COUNTY	ROUTE	KILOMETER POST TOTAL PROJECT	SHEET No	TOTAL SHEETS
04	SF	80	13.2/13.9	288 S2R3	1204

REGISTERED ELECTRICAL ENGINEER DATE

PLANS APPROVAL DATE

REGISTERED PROFESSIONAL ENGINEER FADI WALIEDDINE No. 11465 Exp. 12/31/2009 ELECTRICAL STATE OF CALIFORNIA

PB AMERICAS, Inc.
A Parsons Brinckerhoff Company
303 Second St., Suite 700N
San Francisco, CA 94107-1317

The State of California or its officers or agents shall not be responsible for the accuracy or completeness of electronic copies of this plan sheet.

Caltrans now has a web site! To get to the web site, go to http://www.dot.ca.gov

Caltrans Metric

SHEET NOTE:

(1) Numbers and sizes of conduits are field route to lights, receptacles and switches. See sheets E-284 and E-284A for conduit information.

NOTE:

1. Reference:
   - For typical conduit installation details, see sheets E-286A and E-286B. (3)

REGISTERED PROFESSIONAL ENGINEER DAVID H. OTO No. 10699 Exp. 06/30/2015 ELECTRICAL STATE OF CALIFORNIA

FOR REVISION ONLY (1)(3)

REGISTERED PROFESSIONAL ENGINEER SYN YEE CHIN No. 18186 Exp. 09/30/2013 ELECTRICAL STATE OF CALIFORNIA

FOR REVISION ONLY (2)

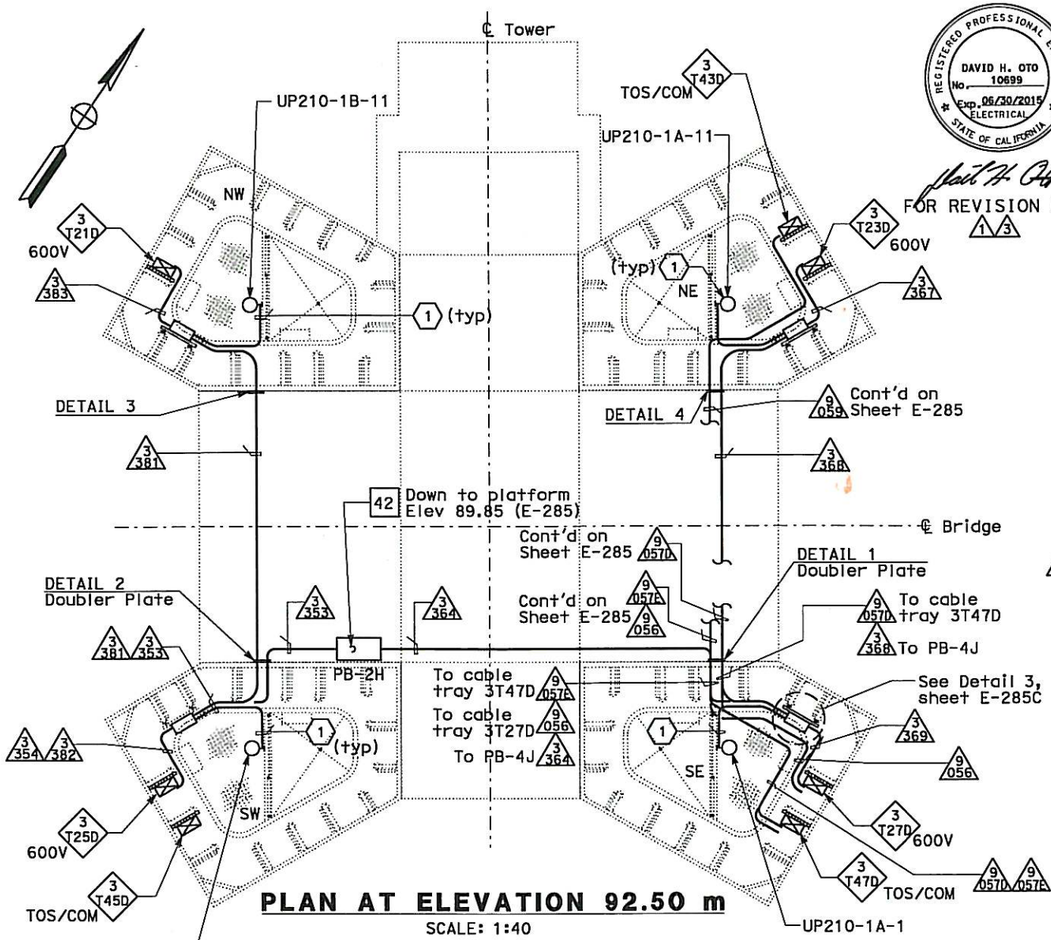

PLAN AT ELEVATION 92.50 m

SCALE: 1:40

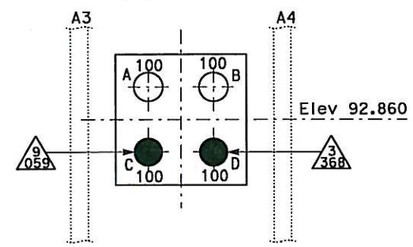

DETAIL 4

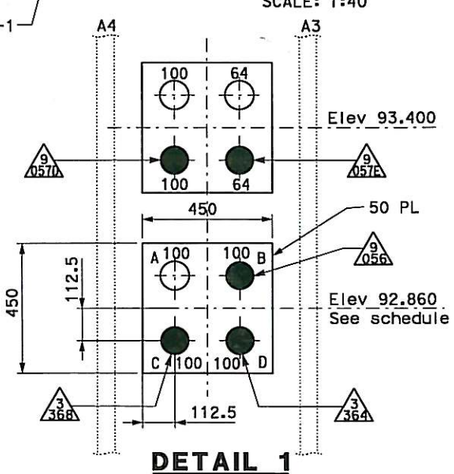

DETAIL 1

TYPICAL DOUBLER PLATE DETAIL

NO SCALE

SE Elev shown, stiffener location shown as viewed from outside shaft, similar for NW shaft & opposite hand for SW & NE shafts

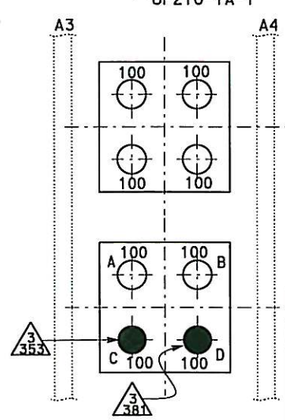

DETAIL 2

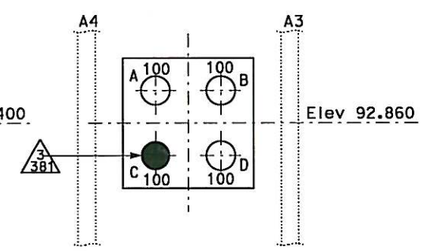

DETAIL 3

TOWER SHAFT SKIN "A" PENETRATION DOUBLER PLATE SCHEDULE

Shaft	Elev (m)	Hole Size (mm) A	B	C	D
NW (W)	11.975	100_S	100_S	51	100_S
NW (W)	16.625	100_S	100_S	100_S	100_S
NW (W)	56.632	100_S	76	100_S	100
NW (W)	92.860	100_S	100_S	100	100_S
NW (W)	129.500	100_S	100_S	100_S	100_S
NW (W)	144.540	100_S	100_S	100_S	100
NE (N)	7.000	100_S	100	100_S	51
NE (N)	11.975	100_S	64	100_S	100_S
NE (N)	13.500	64	100_S	64	78
NE (N)	16.065	100_S	100	100	100
NE (N)	16.625	51	51	100	100
NE (N)	56.422	100	76	100	100
NE (N)	56.977	64_S	100_S	76	51_S
NE (N)	57.622	100_S	100_S	51	64
NE (N)	92.860	100_S	100_S	100	100
NE (N)	129.500	100_S	100_S	100_S	100_S
NE (N)	144.540	100_S	100_S	100	100_S
SE (E)	11.975	100_S	64	64	100
SE (E)	16.625	100_S	100_S	100_S	100_S
SE (E)	56.422	76_S	76	64_S	100_S
SE (E)	56.972	100_S	100	100_S	64
SE (E)	57.622	64	100_S	64	100_S
SE (E)	92.860	100_S	100	100	100
SE (E)	93.400	100_S	64_S	100	64
SE (E)	129.500	100_S	100_S	100_S	100_S
SE (E) *	144.540	64	100_S	64	100_S
SE (E)	144.540	100	100_S	64	76
SW (S)	7.000	100_S	78_S	100_S	100_S
SW (S)	11.975	100_S	100_S	100_S	64
SW (S)	13.500	100_S	78	100_S	100_S
SW (S)	16.625	100_S	51	100_S	100_S
SW (S)	56.542	100	76	100_S	100
SW (S)	57.082	100_S	76	51_S	100_S
SW (S)	57.622	100_S	100_S	100_S	100_S
SW (S)	92.860	100_S	100_S	100	100
SW (S)	93.400	100_S	100_S	100_S	100_S
SW (S)	129.500	100	100_S	100_S	100_S
SW (S) *	144.540	100_S	100_S	100_S	100_S
SW (S)	144.540	100_S	100	76	76

Note: 100_S represents a spare penetration.

* Doubler plates are all between stiffeners A3 & A4, except one plate in each of SE & SW shafts at elevation 144.540, which is between A1 & A2, shown with asterisk in table.

REQUEST FOR INFORMATION NOT ADDRESSED IN THIS CCO REMAIN IN FORCE

MARK	DATE	DESCRIPTIONS	BY	CH'D	CCO#
3	10/23/13	ADDITIONAL SAS MISCELLANEOUS ELECTRICAL CHANGES	TW	RG	191S2
2	05/25/12	SAS/SKYWAY MISCELLANEOUS ELECTRICAL CHANGES	TW	RG	191
1	12/21/11	ELECTRICAL CHANGES FOR ELEVATION 53 IMPROVEMENTS	TW EC	RG RG	190
0	12/11/09	TOWER UTILITY PANELS	JS TW	RG FW	70

REVISIONS

CONTRACT CHANGE ORDER NO. 191 S2

SHEET 30 OF 40

ALL DIMENSIONS ARE IN MILLIMETERS UNLESS OTHERWISE SHOWN.

THIS PLAN ACCURATE FOR ELECTRICAL WORK ONLY.

DETAILS
TOWER AND SUSPENSION CABLE
TOWER POWER AND LIGHTING

SCALE: AS NOTED

E-285B

REVISED BY	DATE REVISED
FK	EDC

DATE 10/01 11/01

CALCULATED/DESIGNED BY — CHECKED BY

DESIGN OVERSIGHT — BEHZAD GOLEMOHAMMADI

STATE OF CALIFORNIA - DEPARTMENT OF TRANSPORTATION — Caltrans

LAST REVISION 10-23-13

DATE PLOTTED => 22-OCT-2013
TIME PLOTTED => 09:27

FOR REDUCED PLANS ORIGINAL SCALE IS IN MILLIMETERS 0 20 40 60 80

DGN FILE =>04-0120f1_0288S02r03.dgn
USERNAME =>Llorico

CU 04251 EA 0120F1

DIST	COUNTY	ROUTE	KILOMETER POST TOTAL PROJECT	SHEET No	TOTAL SHEETS
04	SF	80	13.2/13.9	288 S4R2	1204

REGISTERED ELECTRICAL ENGINEER DATE

PLANS APPROVAL DATE

REGISTERED PROFESSIONAL ENGINEER FADI WALIEDDINE No. 11465 Exp. 12/31/2009 ELECTRICAL STATE OF CALIFORNIA

PB AMERICAS, Inc.
A Parsons Brinckerhoff Company
303 Second St., Suite 700N
San Francisco, CA 94107-1317

The State of California or its officers or agents shall not be responsible for the accuracy or completeness of electronic copies of this plan sheet.

Caltrans now has a web site! To get to the web site, go to http://www.dot.ca.gov

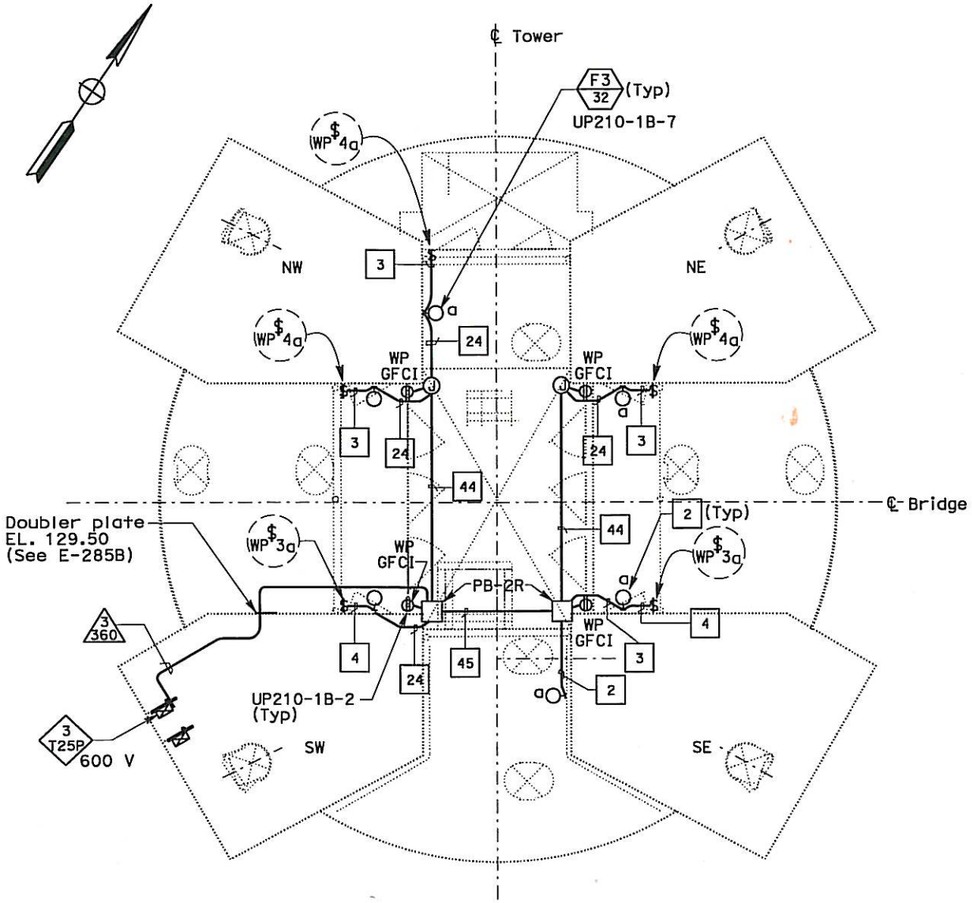

PLAN AT ELEVATION 127.00 m

NOTES:

1. References:
   - For typical conduit ~~installation details~~, see sheets E-268, E-286A and E-286B. △2
   - For utility panel ~~UP-210-1A and UP-210-1B~~ panel schedules, see sheets E-279 and E-280.
   - For types of pull boxes, splice boxes and enclosures, see sheets E-83 and E-169.
   - For conduit and cable tray schedules, see sheets starting at E-401.
   - For lighting installation details, see sheet E-267.
   - For lighting fixture schedule, see sheet E-273.
2. All conduits and fittings routed exposed at grating shall be rigid galvanized steel, PVC coated.
3. Fixture mounting height elevation shall be 2.125 m above floor/platform elevation UNO.
4. Electrical conduits shall enter the tower shafts between stiffeners A3 and A4 only. For conduit entry details, see Structural Utility drawings.
5. For other related work not shown on this sheet, see Electrical Special Provisions.

REGISTERED PROFESSIONAL ENGINEER SYN YEE CHIN No. 18186 Exp. 09/30/2013 ELECTRICAL STATE OF CALIFORNIA

△1 FOR REVISION ONLY

REGISTERED PROFESSIONAL ENGINEER DAVID H. OTO No. 10699 Exp. 06/30/2015 ELECTRICAL STATE OF CALIFORNIA

△2 FOR REVISION ONLY

REQUEST FOR INFORMATION NOT ADDRESSED IN THIS CCO REMAIN IN FORCE

MARK	DATE	DESCRIPTIONS	BY	CH'D	CCO#
△2	10/23/13	ADDITIONAL SAS MISCELLANEOUS ELECTRICAL CHANGES	RR	RG	191S2
△1	05/25/12	SAS/SKYWAY MISCELLANEOUS ELECTRICAL CHANGES	TW	RG	191
△0	12/11/09	TOWER UTILITY PANELS	SYC	RG FW	70

REVISIONS

CONTRACT CHANGE ORDER NO. 191 S2
SHEET 31 OF 40

DETAILS
TOWER AND SUSPENSION CABLE TOWER POWER AND LIGHTING
NO SCALE

E-285D

DESIGN OVERSIGHT	BEHZAD GOLEMOHAMMADI	CALCULATED/DESIGNED BY	FK
		CHECKED BY	EDC
		DATE	10/01
		REVISED BY	II/01
		DATE REVISED	

STATE OF CALIFORNIA - DEPARTMENT OF TRANSPORTATION
Caltrans

LAST REVISION 10-23-13
DATE PLOTTED => 21-OCT-2013
TIME PLOTTED => 16:53

THIS PLAN ACCURATE FOR ELECTRICAL WORK ONLY.

ALL DIMENSIONS ARE IN MILLIMETERS UNLESS OTHERWISE SHOWN.

FOR REDUCED PLANS ORIGINAL SCALE IS IN MILLIMETERS 0 20 40 60 80

DGN FILE =>04-0120F1_0288S04R02.dgn
USERNAME =>Llorico

CU 04251

EA 0120F1

DIST	COUNTY	ROUTE	KILOMETER POST TOTAL PROJECT	SHEET No	TOTAL SHEETS
04	SF	80	13.2/13.9	289 R4	1204

12/19/02
REGISTERED ELECTRICAL ENGINEER DATE

12-6-04
PLANS APPROVAL DATE

REGISTERED PROFESSIONAL ENGINEER JENS ERLINGSSON No. 8249 Exp. 9/30/06 ELECTRICAL STATE OF CALIFORNIA

PB POWER, Inc.
A Parsons Brinckerhoff Company
303 Second St., Suite 700N
San Francisco, CA 94107-1317

The State of California or its officers or agents shall not be responsible for the accuracy or completeness of electronic copies of this plan sheet.

Caltrans now has a web site! To get to the web site, go to http://www.dot.ca.gov

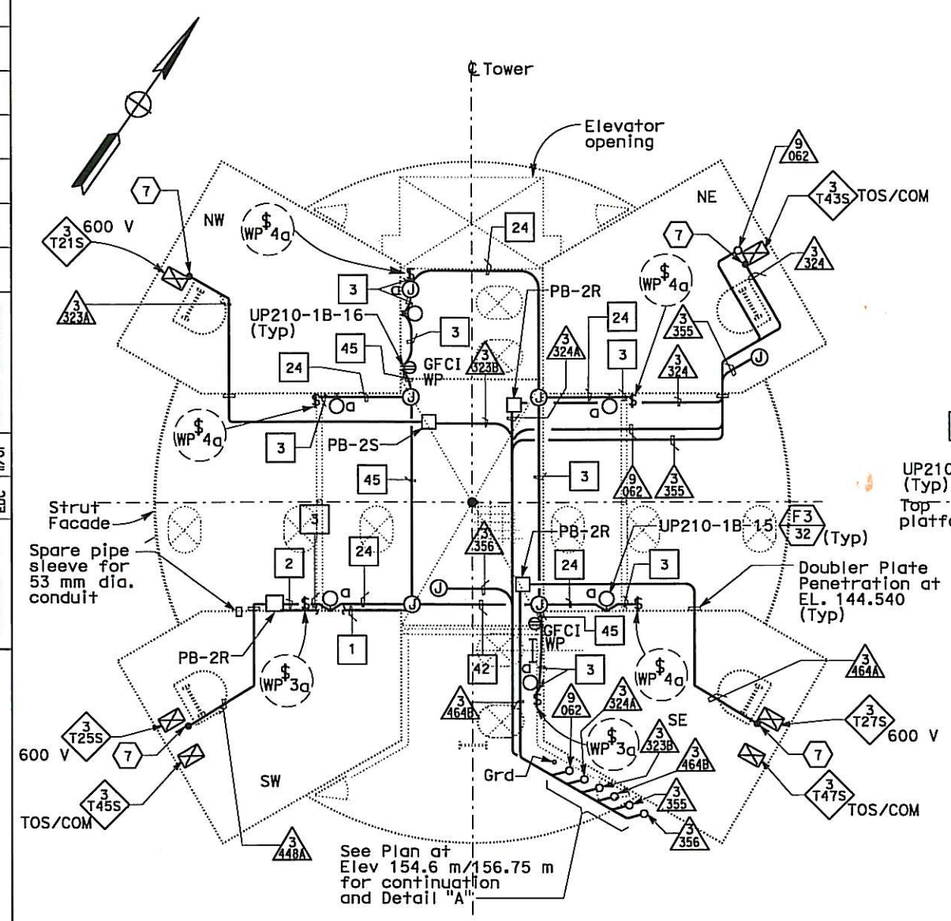

PLAN AT ELEVATION 139.85 m

SCALE: 1:40

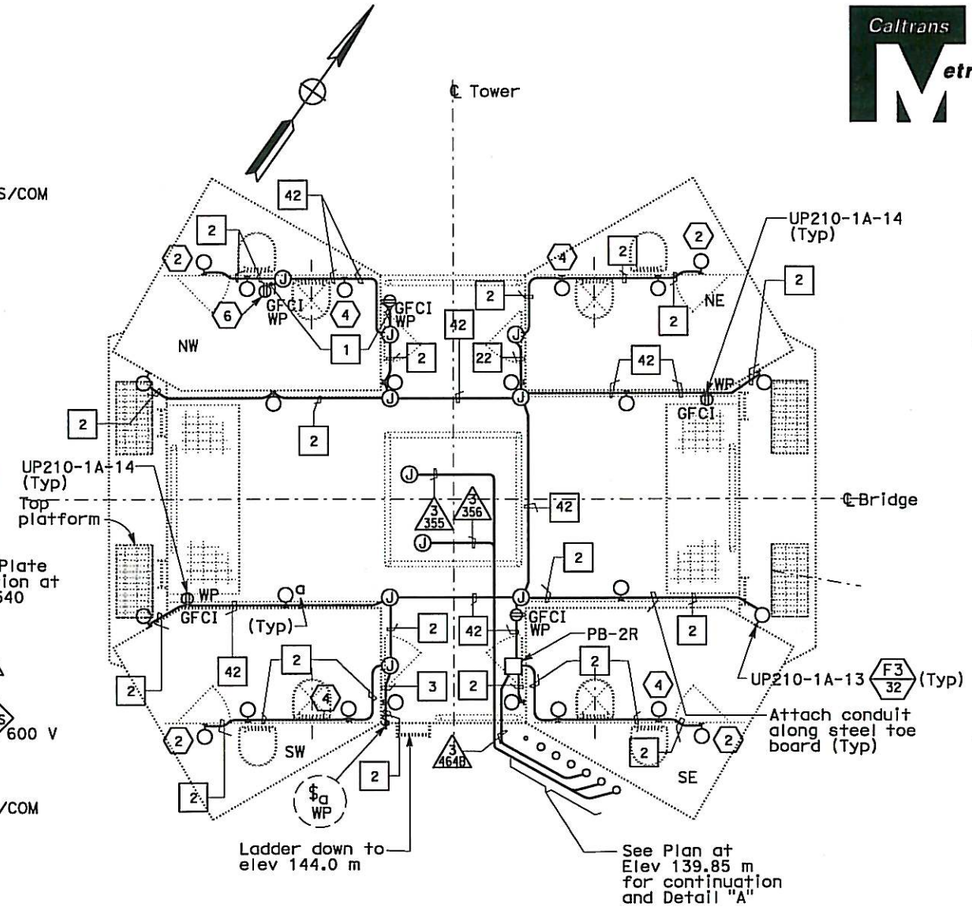

PLAN AT ELEVATIONS 154.6 m TO 156.75 m

SCALE: 1:40

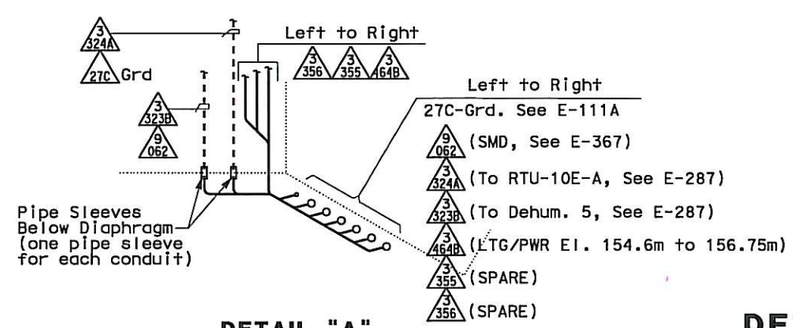

DETAIL "A"
ELEVATION 156.75

SHEET NOTES:

1. Deleted.
2. Fixture mounting height elevation shall be 158.5 m.
3. Deleted.
4. Fixture mounting height elevation shall be 159.25 m.
5. Deleted
6. Receptacle mounting height elevation shall be 158.450 m.
7. Conduit down to cable tray located below EL. 143.00 diaphragm.

NOTES:

1. References:
   - For utility panels UP210-1A and UP210-1B, panel schedules see sheets E-279 and E-280.
   - For types of pull boxes, splice boxes and enclosures, see sheets E-83 and E-169.
   - For conduit and cable tray schedules, see sheets starting at E-401.
   - For lighting installation details, see sheet E-267.
   - For lighting fixture schedule, see sheet E-263.
   - Deleted.
   - For typical conduit ~~installation details~~, see sheets E-268, E-286A and E-286B. (4)
2. All conduits and fittings routed exposed at grating shall be rigid galvanized steel, PVC coated.
3. Fixture mounting height shall be 2.125 m above floor/platform elevation UNO.
4. Electrical conduits shall enter the tower shafts between stiffeners A3 and A4 only. For conduit entry details, see Structural Utility drawings.
5. For other related work not shown on this sheet, see Electrical Special Provisions.
6. The contractor shall install pull box/JB(s) along conduit runs to limit bends to be three (3) 90 degrees or fewer.

DETAILS
TOWER AND SUSPENSION CABLE
TOWER POWER AND LIGHTING

SCALE 1:50

REGISTERED PROFESSIONAL ENGINEER MARCELL FUMIO TAKAKI No. E 8651 Exp. 9/30/2008 ELECTRICAL STATE OF CALIFORNIA
FOR REVISION ONLY (1)

REGISTERED PROFESSIONAL ENGINEER DAVID H. OTO No. 10699 Exp. 06/30/2015 ELECTRICAL STATE OF CALIFORNIA
FOR REVISION ONLY (4)

REGISTERED PROFESSIONAL ENGINEER FADI WALIEDDINE No. 11465 Exp. 12/31/2009 ELECTRICAL STATE OF CALIFORNIA
FOR REVISION ONLY (2)

REGISTERED PROFESSIONAL ENGINEER SYN YEE CHIN No. 18186 Exp. 09/30/2011 ELECTRICAL STATE OF CALIFORNIA
FOR REVISION ONLY (3)

THIS PLAN ACCURATE FOR ELECTRICAL WORK ONLY.

REQUEST FOR INFORMATION NOT ADDRESSED IN THIS CCO REMAIN IN FORCE

MARK	DATE	DESCRIPTIONS	BY	CH'D	CCO#
4	10/23/13	ADDITIONAL SAS MISCELLANEOUS ELECTRICAL CHANGES	RR	RG	191S2
3	09/21/11	TOWER SUSPENDER CABLE & ELEVATOR	RM	TW	203S1
2	12/11/09	TOWER UTILITY PANELS	SYC RG	FW	70
1	02/19/08	ELECTRICAL MODIFICATIONS	MP EL	RR	42

REVISIONS

CONTRACT CHANGE ORDER NO. 191 S2
SHEET 32 OF 40

ALL DIMENSIONS ARE IN MILLIMETERS UNLESS OTHERWISE SHOWN

E-286

STATE OF CALIFORNIA - DEPARTMENT OF TRANSPORTATION
Caltrans

DESIGN OVERSIGHT: BEHZAD GOLEMOHAMMADI

CALCULATED/DESIGNED BY: FK | CHECKED BY: EDC | DATE 10/01 | REVISED BY: 11/01 | DATE REVISED

LAST REVISION 10-23-13 | DATE PLOTTED => 22-OCT-2013 | TIME PLOTTED => 10:22

FOR REDUCED PLANS ORIGINAL SCALE IS IN MILLIMETERS 0 20 40 60 80

DGN FILE =>04-0120F1_0289r04.dgn
USERNAME =>Llorico

CU 04251 | EA 0120F1

DIST	COUNTY	ROUTE	KILOMETER POST TOTAL PROJECT	SHEET No.	TOTAL SHEETS
04	SF	80	13.2/13.9	289 S1	1204

REGISTERED ELECTRICAL ENGINEER 10/07/13 DATE

PLANS APPROVAL DATE

REGISTERED PROFESSIONAL ENGINEER DAVID H. OTO No. 10699 Exp. 06/30/2015 ELECTRICAL STATE OF CALIFORNIA

PB AMERICAS, Inc.
A Parsons Brinckerhoff Company
303 Second St., Suite 700N
San Francisco, CA 94107-1317

The State of California or its officers or agents shall not be responsible for the accuracy or completeness of electronic copies of this plan sheet.

Caltrans now has a web site! To get to the web site, go to http://www.dot.ca.gov

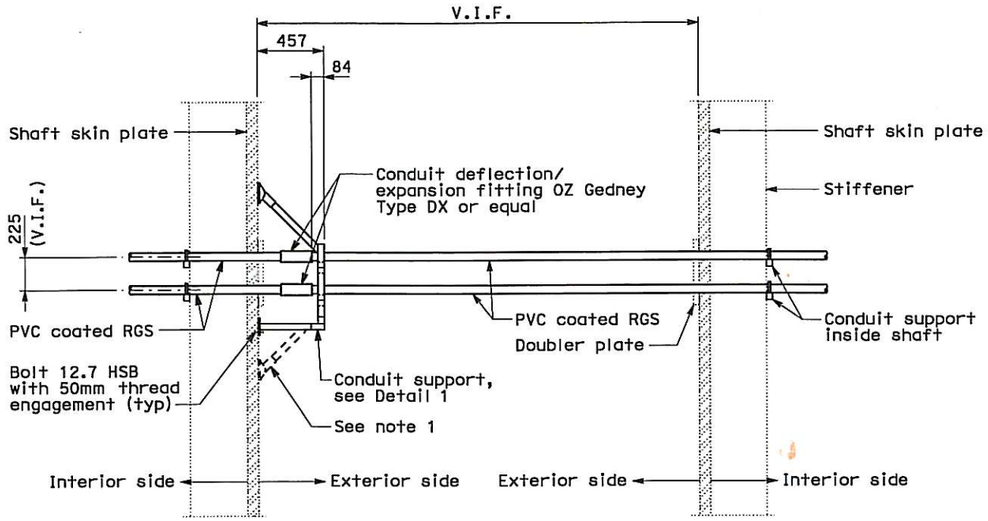

CONDUIT INSTALLATION BETWEEN TOWER SHAFT

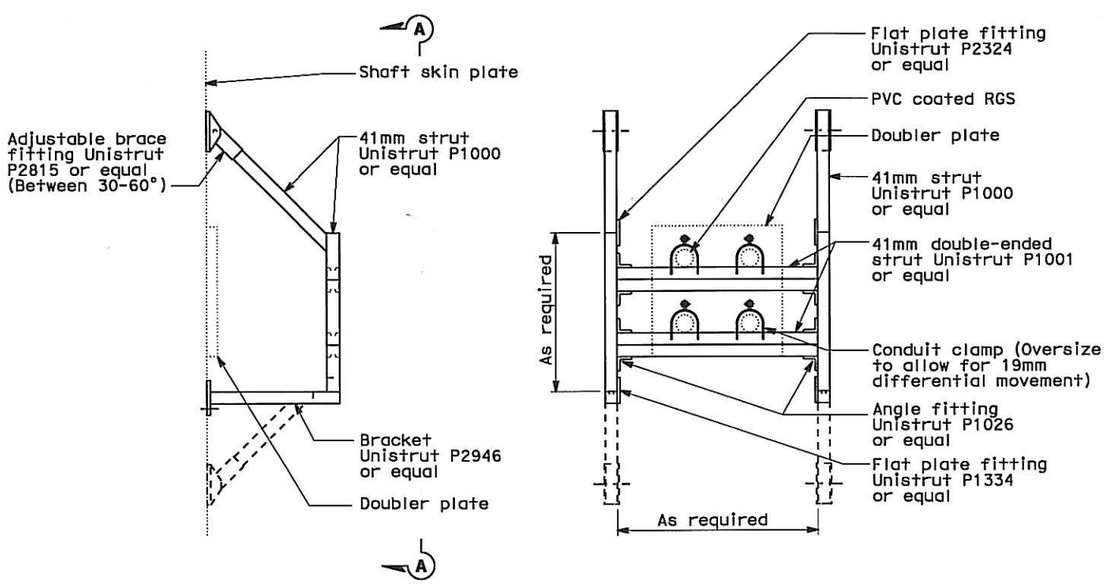

DETAIL 1

NOTES:

1. Contractor may install the adjustable brace fitting at the bottom if it is not feasible to mount the brace at top. Contractor shall maintain an overhead clearance under the brace per OSHA requirements or as directed by the Engineer in field.

REQUEST FOR INFORMATION NOT ADDRESSED IN THIS CCO REMAIN IN FORCE

MARK	DATE	DESCRIPTIONS	BY	CH'D	CCO#
0	10/28/13	ADDITIONAL SAS MISCELLANEOUS ELECTRICAL CHANGES	RR RB	RG	191S2

REVISIONS

CONTRACT CHANGE ORDER NO. 191 S2
SHEET 33 OF 40

DETAILS
TOWER AND SUSPENSION CABLE TOWER POWER AND LIGHTING
NO SCALE

E-286A

REVISED BY	DATE REVISED
RR RB	10/13

CALCULATED/ DESIGNED BY	CHECKED BY
RR RB	RG

DESIGN OVERSIGHT
BEHZAD GOLEMOHAMMADI

STATE OF CALIFORNIA - DEPARTMENT OF TRANSPORTATION
Caltrans

THIS PLAN ACCURATE FOR ELECTRICAL WORK ONLY.

ALL DIMENSIONS ARE IN MILLIMETERS UNLESS OTHERWISE SHOWN.

FOR REDUCED PLANS ORIGINAL SCALE IS IN MILLIMETERS 0 20 40 60 80

DGN FILE =>04-0120f1_0289S01.dgn
USERNAME =>Llorico

CU 04251

EA 0120F1

LAST REVISION 10-28-13
DATE PLOTTED => 28-OCT-2013
TIME PLOTTED => 17:43

DIST	COUNTY	ROUTE	KILOMETER POST TOTAL PROJECT	SHEET No	TOTAL SHEETS
04	SF	80	13.2/13.9	289 S2	1204

REGISTERED ELECTRICAL ENGINEER 10/23/13 DATE

PLANS APPROVAL DATE

REGISTERED PROFESSIONAL ENGINEER DAVID H. OTO No. 10699 Exp. 06/30/2015 ELECTRICAL STATE OF CALIFORNIA

PB AMERICAS, Inc.
A Parsons Brinckerhoff Company
303 Second St., Suite 700N
San Francisco, CA 94107-1317

The State of California or its officers or agents shall not be responsible for the accuracy or completeness of electronic copies of this plan sheet.

Caltrans now has a web site! To get to the web site, go to http://www.dot.ca.gov

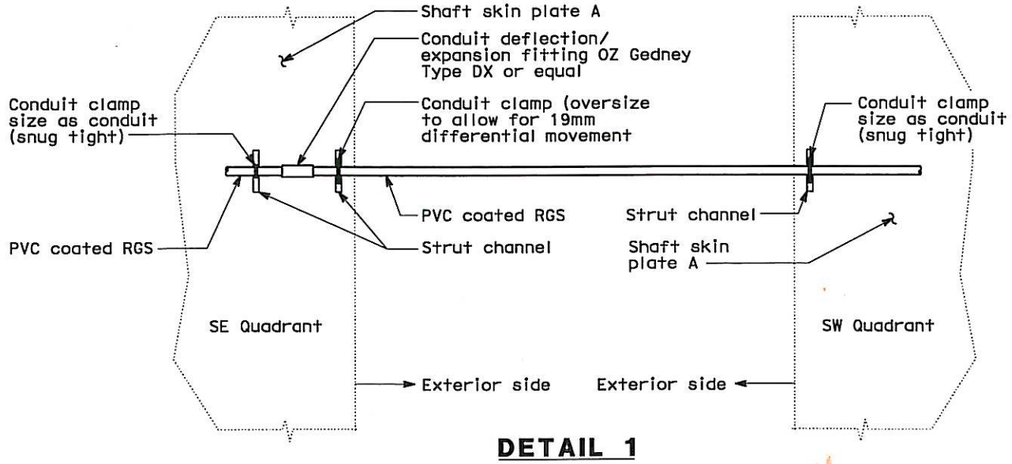

DETAIL 1

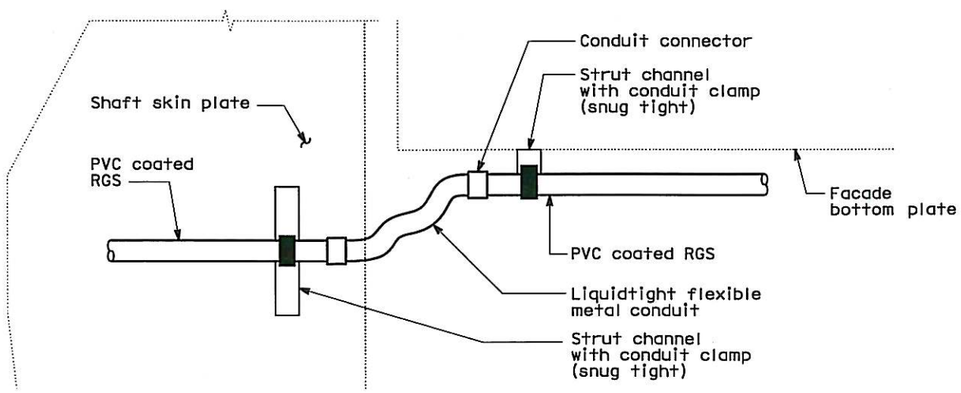

DETAIL 2

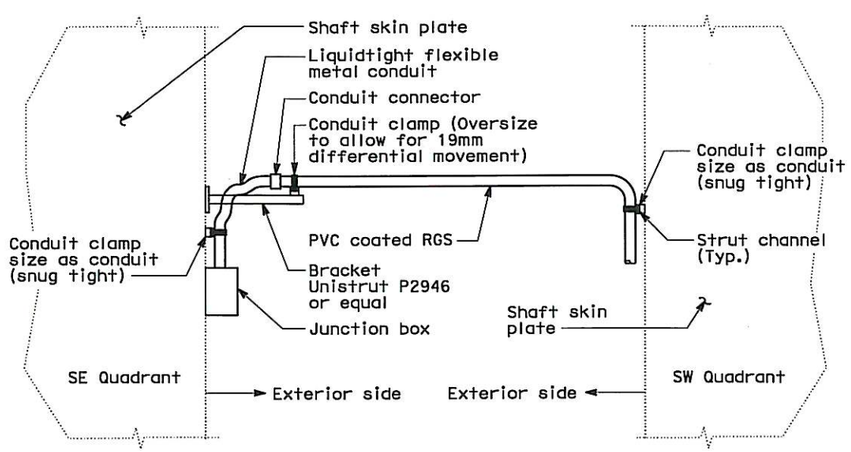

DETAIL 3

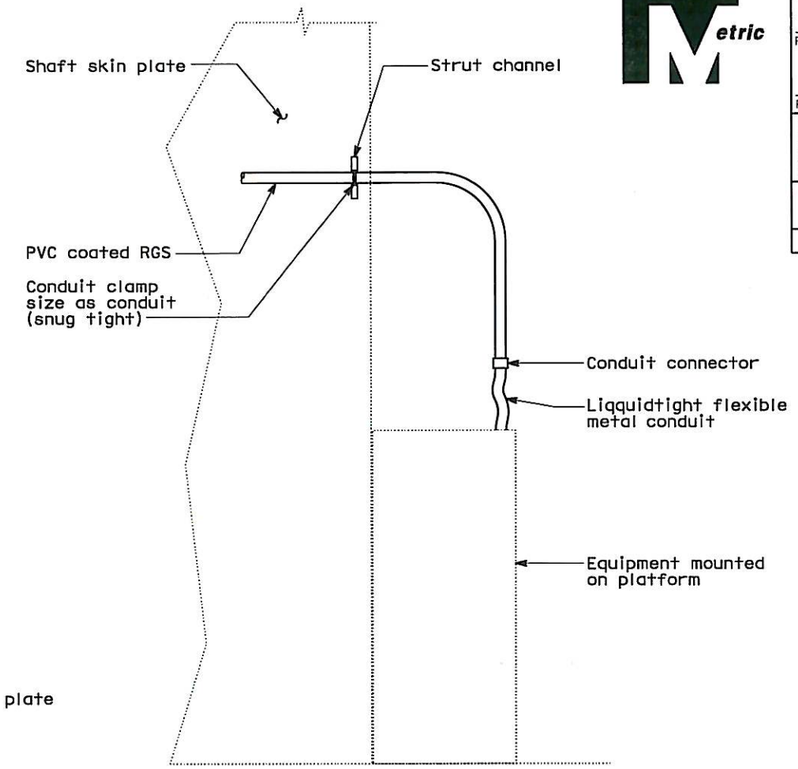

DETAIL 4

REQUEST FOR INFORMATION NOT ADDRESSED IN THIS CCO REMAIN IN FORCE					
0	10/23/13	ADDITIONAL SAS MISCELLANEOUS ELECTRICAL CHANGES	RR RB	RG	191S2
MARK	DATE	DESCRIPTIONS	BY	CH'D	CCO#
REVISIONS					

CONTRACT CHANGE ORDER NO. 191 S2
SHEET 34 OF 40

DETAILS
TOWER AND SUSPENSION CABLE TOWER POWER AND LIGHTING
NO SCALE

E-286B

THIS PLAN ACCURATE FOR ELECTRICAL WORK ONLY.

REVISED BY	DATE REVISED		
DATE 10/13	10/13		
RR RB	RG		
CALCULATED/ DESIGNED BY	CHECKED BY		
DESIGN OVERSIGHT	BEHZAD GOLEMOHAMMADI		

STATE OF CALIFORNIA - DEPARTMENT OF TRANSPORTATION

LAST REVISION 00-00-00 | DATE PLOTTED => 21-OCT-2013 TIME PLOTTED => 16:53

DIST	COUNTY	ROUTE	KILOMETER POST TOTAL PROJECT	SHEET No	TOTAL SHEETS
04	SF	80	13.2/13.9	316 R1	1204

REGISTERED ELECTRICAL ENGINEER 12/19/02 DATE

12-6-04
PLANS APPROVAL DATE

REGISTERED PROFESSIONAL ENGINEER JENS ERLINGSSON No. 8249 Exp. 9/30/06 ELECTRICAL STATE OF CALIFORNIA

PB POWER, Inc.
A Parsons Brinckerhoff Company
303 Second St., Suite 700N
San Francisco, CA 94107-1317

The State of California or its officers or agents shall not be responsible for the accuracy or completeness of electronic copies of this plan sheet.

Caltrans now has a web site! To get to the web site, go to http://www.dot.ca.gov

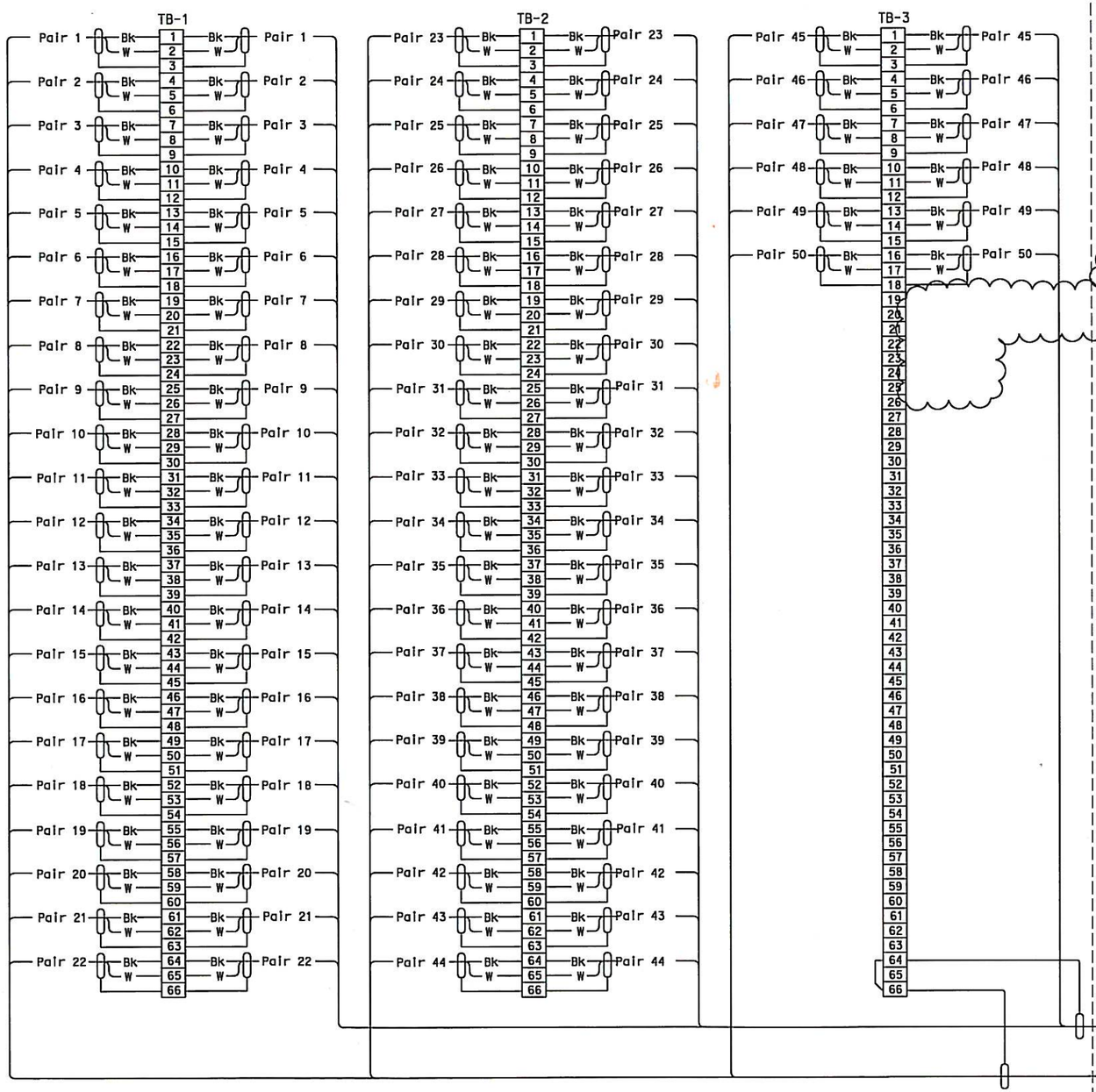

TELEPHONE TERMINAL BOX CONNECTION DIAGRAM

Shown for #TEL-6, See Table A for other terminal boxes

REGISTERED PROFESSIONAL ENGINEER DAVID H. OTO No. 10699 Exp. 06/30/2015 ELECTRICAL STATE OF CALIFORNIA

FOR REVISION ONLY

MARK	DATE	DESCRIPTIONS	BY	CK	CCO
1	10/23/13	ADDITIONAL SAS MISCELLANEOUS ELECTRICAL CHANGES	RR	RG	191S2

REVISIONS

CONTRACT CHANGE ORDER NO. 191 S2
SHEET 35 OF 40

SHEET NOTES:

1. For cable/circuit number, see Table A.
2. Use Table A in conjunction with cable block diagram sheet E-317.
3. Deleted.

NOTES:

1. References:
   - For circuit and conduit/cable tray schedules, see sheets starting at E-401.
   - For Scada and telephone cable block diagram, see sheet E-317.
   - For telephone interface plan and cable block diagram, see sheet E-316.

TABLE A (2)

BOX NO.	CABLES		REMARKS
#TEL-4	—	—	For cable interface, see sheet E-337C.
#TEL-5	—	—	For cable interface, see sheet E-337D.
#TEL-6	1473-6	1473-7	
#TEL-7	1473-7	1473-8	
#TEL-8	1473-8	—	
	1473-10	2473-10	For cable interface, see sheet E-316, sheet notes 1 and 2

CKT #1473-7 (E) ~~50 pairs #19,~~ shielded pairs with overall shield

To ~~Telephone~~ Terminal Box #TEL-7

To Telephone Terminal Box #TEL-5

CKT #1473-6 (E) ~~50 pairs #19,~~ shielded pairs with overall shield

DETAILS
~~SCADA~~ REMOTE TERMINAL UNIT SYSTEM #TEL-6 TERMINAL CONNECTION DIAGRAM

NO SCALE

E-337

STATE OF CALIFORNIA - DEPARTMENT OF TRANSPORTATION

DESIGN OVERSIGHT: BEHZAD GOLEMOHAMMADI

CALCULATED/DESIGNED BY: EDC — CHECKED BY: JL

REVISED BY: EJL — DATE REVISED: 2/04

DATE: 10/01 — 12/01

LAST REVISION 10-23-13

DATE PLOTTED => 21-OCT-2013
TIME PLOTTED => 16:53

FOR REDUCED PLANS ORIGINAL SCALE IS IN MILLIMETERS 0 20 40 60 80

DGN FILE =>04-0120F1_0316R01.dgn
USERNAME =>Llorico

CU 04251

EA 0120F1

TELEPHONE TERMINAL BOX CONNECTION DIAGRAM

DIST	COUNTY	ROUTE	KILOMETER POST TOTAL PROJECT	SHEET No	TOTAL SHEETS
04	SF	80	13.2/13.9	316 S3	1204

REGISTERED ELECTRICAL ENGINEER 10/23/13 DATE

PLANS APPROVAL DATE

REGISTERED PROFESSIONAL ENGINEER DAVID H. OTO No. 10699 Exp. 06/30/2015 ELECTRICAL STATE OF CALIFORNIA

PB AMERICAS, Inc.
A Parsons Brinckerhoff Company
303 Second St., Suite 700N
San Francisco, CA 94107-1317

The State of California or its officers or agents shall not be responsible for the accuracy or completeness of electronic copies of this plan sheet.

Caltrans now has a web site! To get to the web site, go to http://www.dot.ca.gov

SHEET NOTES:

1. For terminal connection diagram and continuation to TEL #5, see E-337D.
2. Spare cable or conductors ends shall be coiled and taped.
3. The Contractor shall extend and coil 5 meters of cable in Manhole-27. All cables shall be tagged with circuit numbers as shown. For location of Manhole-27, see sheet E-11.

NOTES:

1. References:
   - For circuit and conduit/cable tray schedules, see sheets starting at E-401.
   - For Scada and telephone cable block diagram, see sheet E-317.
   - For telephone interface plan and cable block diagram, see sheet E-316.

MARK	DATE	DESCRIPTIONS	BY	CK	CCO
0	10/23/13	ADDITIONAL SAS MISCELLANEOUS ELECTRICAL CHANGES	RR	RG	191S2

REVISIONS

CONTRACT CHANGE ORDER NO. 191 S2
SHEET 36 OF 40

DETAILS
SCADA REMOTE TERMINAL UNIT SYSTEM #TEL-4 TERMINAL CONNECTION DIAGRAM
NO SCALE

E-337C

REVISED BY	DATE REVISED
RR	08/13

CALCULATED/DESIGNED BY	CHECKED BY
RG	08/13

DESIGN OVERSIGHT: BEHZAD GOLEMOHAMMADI

STATE OF CALIFORNIA - DEPARTMENT OF TRANSPORTATION

Caltrans

LAST REVISION 00-00-00

DATE PLOTTED => 22-OCT-2013
TIME PLOTTED => 10:42

FOR REDUCED PLANS ORIGINAL SCALE IS IN MILLIMETERS 0 20 40 60 80

DGN FILE =>04-0120F1_0316S03.dgn
USERNAME =>Llorico

CU 04251 | EA 0120F1

DIST	COUNTY	ROUTE	KILOMETER POST TOTAL PROJECT	SHEET No	TOTAL SHEETS
04	SF	80	13.2/13.9	316 S4	1204

REGISTERED ELECTRICAL ENGINEER 10/23/13 DATE

PLANS APPROVAL DATE

REGISTERED PROFESSIONAL ENGINEER DAVID H. OTO No. 10699 Exp. 06/30/2015 ELECTRICAL STATE OF CALIFORNIA

PB AMERICAS, Inc.
A Parsons Brinckerhoff Company
303 Second St., Suite 700N
San Francisco, CA 94107-1317

The State of California or its officers or agents shall not be responsible for the accuracy or completeness of electronic copies of this plan sheet.

Caltrans now has a web site! To get to the web site, go to http://www.dot.ca.gov

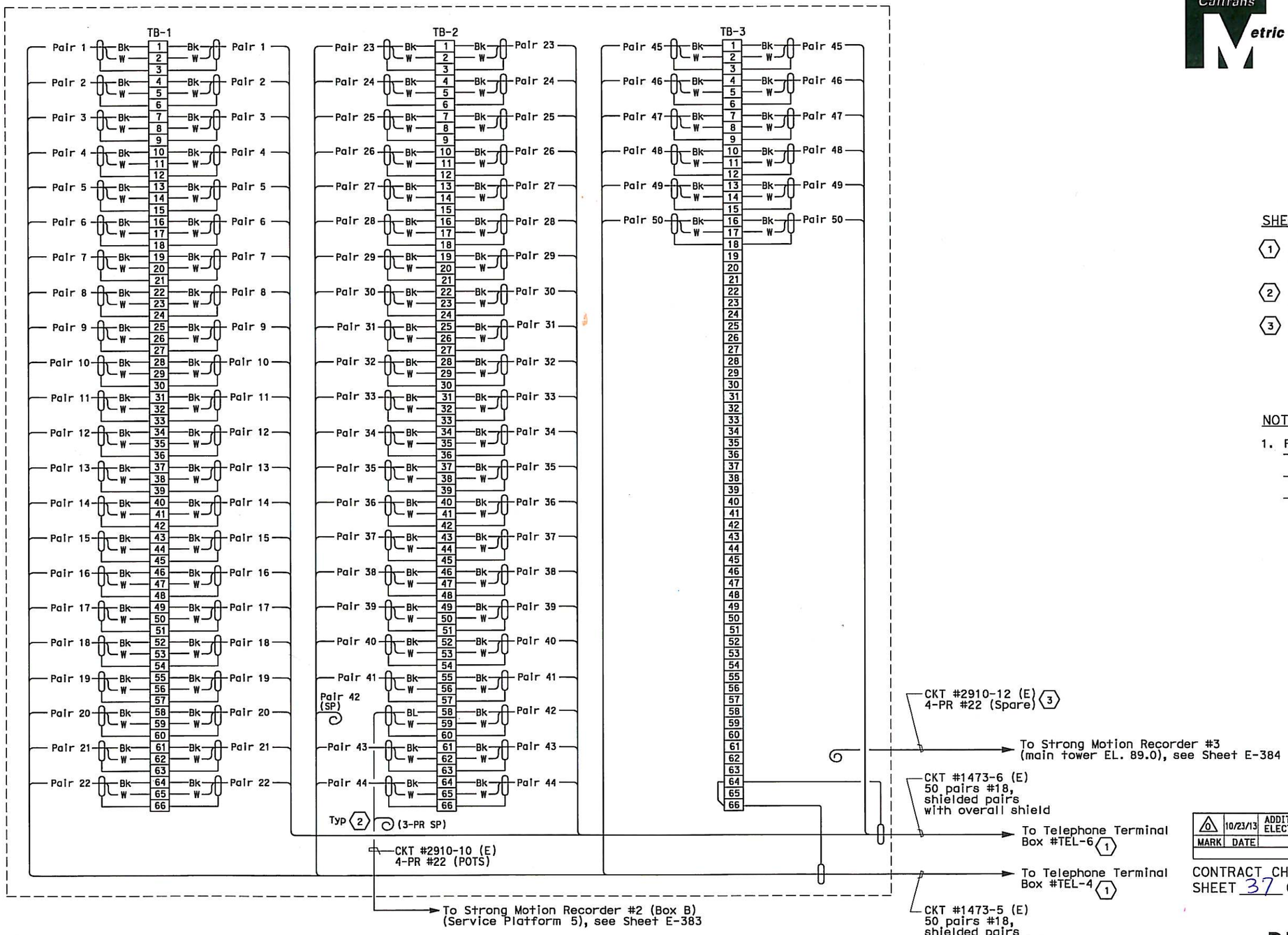

TELEPHONE TERMINAL BOX CONNECTION DIAGRAM

SHEET NOTES:

1. For terminal connection diagram and continuation to TEL #4, see E-337C. For TEL #6, see E-337.
2. Spare cable or conductor ends shall be coiled and taped.
3. Existing cable #2910-12 shall be abandoned in place, labeled spare and unterminated. Cable ends shall be coiled and taped.

NOTES:

1. References:
   - For circuit and conduit/cable tray schedules, see sheets starting at E-401.
   - For Scada and telephone cable block diagram, see sheet E-317.
   - For telephone interface plan and cable block diagram, see sheet E-316.

MARK	DATE	DESCRIPTIONS	BY	CK	CCO
0	10/23/13	ADDITIONAL SAS MISCELLANEOUS ELECTRICAL CHANGES	RR	RG	191S2

REVISIONS

CONTRACT CHANGE ORDER NO. 191 S2
SHEET 37 OF 40

DETAILS
SCADA REMOTE TERMINAL UNIT SYSTEM #TEL-5 TERMINAL CONNECTION DIAGRAM
NO SCALE

E-337D

STATE OF CALIFORNIA - DEPARTMENT OF TRANSPORTATION

DESIGN OVERSIGHT: BEHZAD GOLEMOHAMMADI

CALCULATED/DESIGNED BY: RR DATE 08/13 REVISED BY
CHECKED BY: RG DATE 08/13 REVISED 2/

LAST REVISION 00-00-00 DATE PLOTTED => 21-OCT-2013 TIME PLOTTED => 16:53

FOR REDUCED PLANS ORIGINAL SCALE IS IN MILLIMETERS 0 20 40 60 80

DGN FILE =>04-0120f1_0316S04.dgn
USERNAME =>Liorico

CU 04251 EA 0120F1

DIST	COUNTY	ROUTE	KILOMETER POST TOTAL PROJECT	SHEET No	TOTAL SHEETS
04	SF	80	13.2/13.9	349 R2	1204

REGISTERED ELECTRICAL ENGINEER 12/19/02 DATE

12-6-04
PLANS APPROVAL DATE

REGISTERED PROFESSIONAL ENGINEER JENS ERLINGSSON No. 8249 Exp. 9/30/06 ELECTRICAL STATE OF CALIFORNIA

PB POWER, Inc.
A Parsons Brinckerhoff Company
303 Second St., Suite 700N
San Francisco, CA 94107-1317

The State of California or its officers or agents shall not be responsible for the accuracy or completeness of electronic copies of this plan sheet.

Caltrans now has a web site! To get to the web site, go to http://www.dot.ca.gov

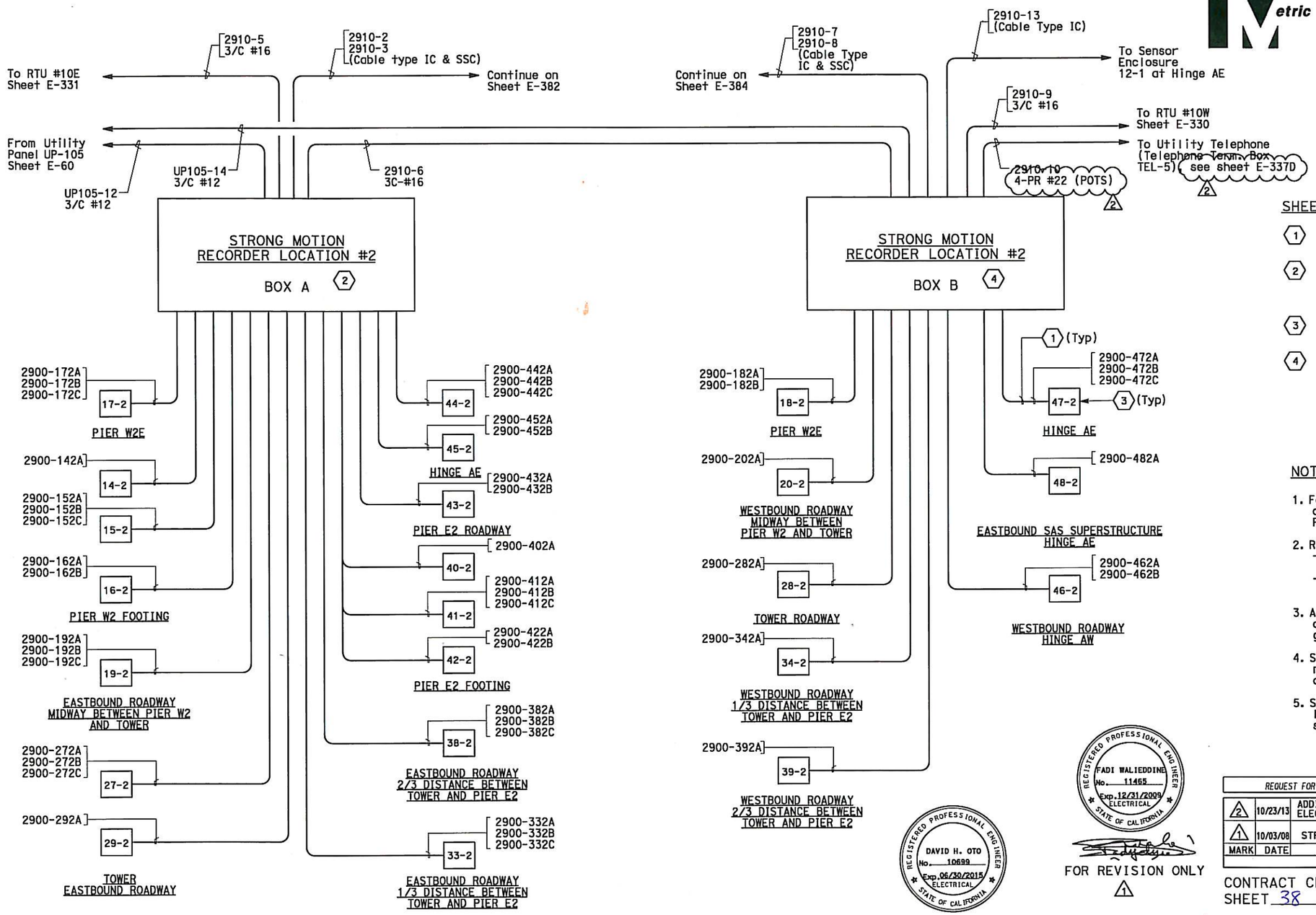

SHEET NOTES:

(1) Strong Motion sensor cable Type SSC, unless otherwise indicated.

(2) Strong Motion Recorder #2 Box A consists of two 18-channel recorders and one 12-channel recorder, connected to a total of 35 sensors.

(3) Sensor enclosure with identification number as shown.

(4) Strong Motion Recorder #2 Box B consist of one 18-channel recoder connected to a total of 12 sensors.

NOTES:

1. For other related work not shown on this drawing, see Electrical Special Provisions.
2. References:
   - For general notes of the strong motion detection system, see sheet E-361.
   - For circuit and conduit/cable tray schedules, see sheets starting at E-401.
3. All conduits and fittings located outside or inside pier shall be galvanized rigid steel, PVC coated.
4. Secure enclosure to concrete with manufacturer's recommended mounting and approved by the Engineer.
5. Strong motion recorder #2 box A and box B located on service platform 5, see sheet E-72.

REGISTERED PROFESSIONAL ENGINEER DAVID H. OTO No. 10699 Exp. 06/30/2015 ELECTRICAL STATE OF CALIFORNIA

FOR REVISION ONLY (2)

REGISTERED PROFESSIONAL ENGINEER FADI WALIEDDINE No. 11465 Exp. 12/31/2009 ELECTRICAL STATE OF CALIFORNIA

FOR REVISION ONLY (1)

REQUEST FOR INFORMATION NOT ADDRESSED IN THIS CCO REMAIN IN FORCE

MARK	DATE	DESCRIPTIONS	BY	CH'D	CCO#
2	10/23/13	ADDITIONAL SAS MISCELLANEOUS ELECTRICAL CHANGES	RR	RG	19152
1	10/03/08	STRONG MOTION SYSTEM	RG	FW	74

REVISIONS

CONTRACT CHANGE ORDER NO. 19152
SHEET 38 OF 40

DETAILS
STRONG MOTION DETECTION SYSTEM CABLE BLOCK DIAGRAM

NO SCALE

E-383

THIS PLAN IS ACCURATE FOR ELECTRICAL WORK ONLY.

STATE OF CALIFORNIA - DEPARTMENT OF TRANSPORTATION
Caltrans

DESIGN OVERSIGHT: BEHZAD GOLEMOHAMMADI

CALCULATED/ DESIGNED BY	JW	DATE 02/02	REVISED BY
CHECKED BY	-	-	DATE REVISED

LAST REVISION 10-23-13
DATE PLOTTED => 21-OCT-2013
TIME PLOTTED => 16:53

FOR REDUCED PLANS ORIGINAL SCALE IS IN MILLIMETERS 0 20 40 60 80

DGN FILE =>04-0120f1_0349r02.dgn
USERNAME =>Llorico

CU 04251 | EA 0120F1

DIST	COUNTY	ROUTE	KILOMETER POST TOTAL PROJECT	SHEET No	TOTAL SHEETS
04	SF	80	13.2/13.9	350 R2	1204

REGISTERED ELECTRICAL ENGINEER 12/19/02 DATE

12-6-04
PLANS APPROVAL DATE

REGISTERED PROFESSIONAL ENGINEER JENS ERLINGSSON No. 8249 Exp. 9/30/06 ELECTRICAL STATE OF CALIFORNIA

PB POWER, Inc.
A Parsons Brinckerhoff Company
303 Second St., Suite 700N
San Francisco, CA 94107-1317

The State of California or its officers or agents shall not be responsible for the accuracy or completeness of electronic copies of this plan sheet.

Caltrans now has a web site! To get to the web site, go to http://www.dot.ca.gov

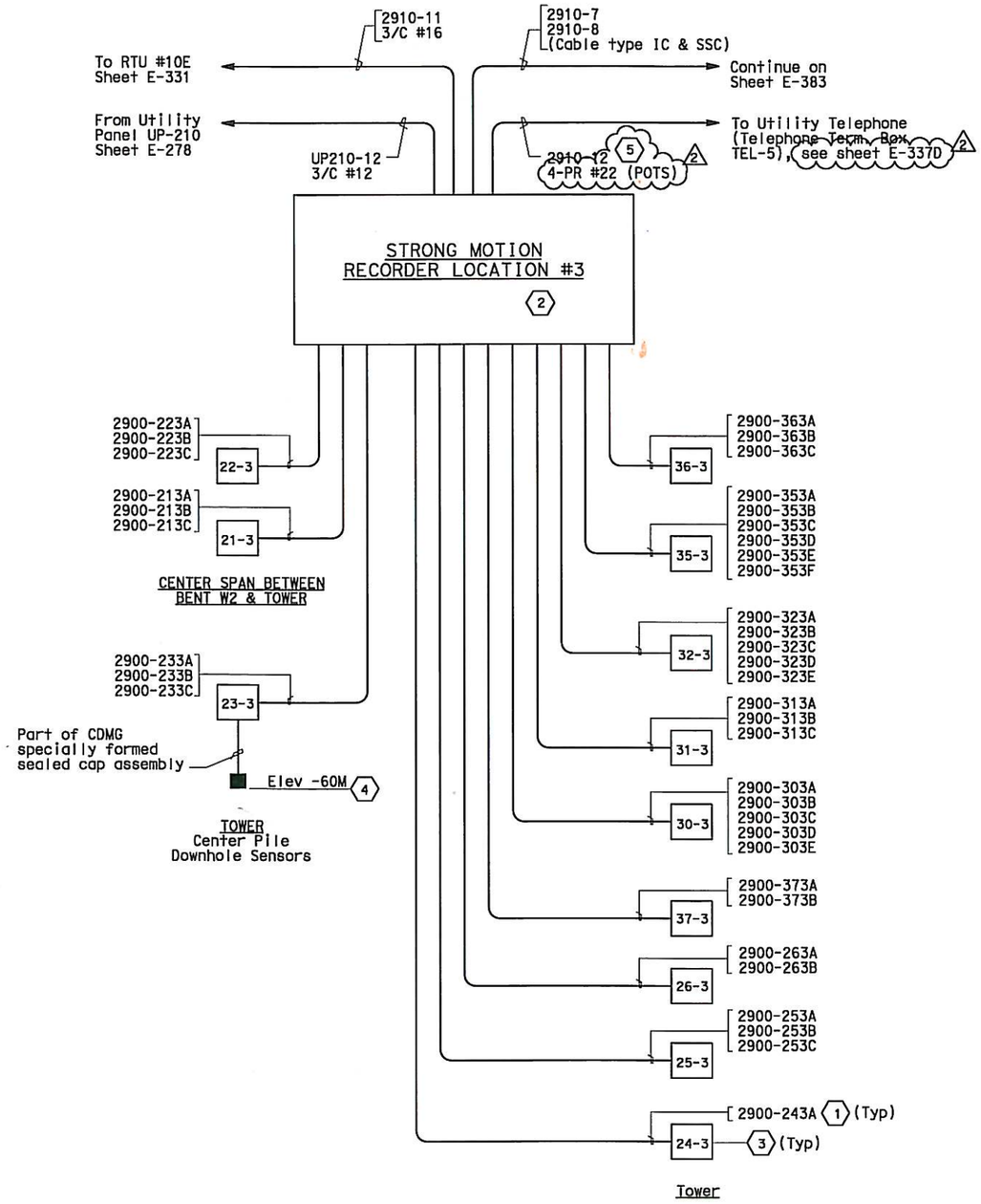

SHEET NOTES:

1. Strong Motion sensor cable Type SSC, unless otherwise indicated.
2. Strong Motion Recorder #3 consists of one 18-channel recorder and two 12-channel recorders, connected to a total of 39 sensors.
3. Sensor enclosure with identification number as shown.
4. Sensor enclosure 23-3 at tower elevation 3M. Sensor orientation assembly at minus 60M. Installation of downhole sensor package and associated cabling by others.
5. Existing cable #2910-12 shall be abandoned in place, labeled spare and unterminated. Cable ends shall be coiled and taped.

NOTES:

1. For other related work not shown on this drawing, see Electrical Special Provisions.
2. References:
   - For general notes of the strong motion detection system, see sheet E-361.
   - For circuit and conduit/cable tray schedules, see sheets starting at E-401.
3. All conduits and fittings located outside or inside pier shall be galvanized rigid steel, PVC coated.
4. Secure enclosure to concrete with manufacturer's recommended mounting and approved by the Engineer.
5. Strong motion recorder #3 located at tower, see sheet E-366.

REGISTERED PROFESSIONAL ENGINEER DAVID H. OTO No. 10699 Exp. 06/30/2015 ELECTRICAL STATE OF CALIFORNIA

FOR REVISION ONLY 2

REGISTERED PROFESSIONAL ENGINEER FADI WALIEDDINE No. 11465 Exp. 12/31/2009 ELECTRICAL STATE OF CALIFORNIA

FOR REVISION ONLY 1

REQUEST FOR INFORMATION NOT ADDRESSED IN THIS CCO REMAIN IN FORCE

MARK	DATE	DESCRIPTIONS	BY	CH'D	CCO#
2	10/23/13	ADDITIONAL SAS MISCELLANEOUS ELECTRICAL CHANGES	RR	RG	191S2
1	10/03/08	STRONG MOTION SYSTEM	RG	FW	74

REVISIONS

CONTRACT CHANGE ORDER NO. 191 S2
SHEET 39 OF 40

DETAILS
STRONG MOTION DETECTION SYSTEM
CABLE BLOCK DIAGRAM

NO SCALE

E-384

REVISED BY	DATE	DATE REVISED
JW	02/02	-

CALCULATED/DESIGNED BY: JW
CHECKED BY: -

DESIGN OVERSIGHT: BEHZAD GOLEMOHAMMADI

STATE OF CALIFORNIA - DEPARTMENT OF TRANSPORTATION
Caltrans

THIS PLAN IS ACCURATE FOR ELECTRICAL WORK ONLY.

ALL DIMENSIONS ARE IN MILLIMETERS UNLESS OTHERWISE SHOWN.

FOR REDUCED PLANS ORIGINAL SCALE IS IN MILLIMETERS 0 20 40 60 80

DGN FILE =>04-0120f1_0350r02.dgn
USERNAME =>Liorico

CU 04251 | EA 0120F1

LAST REVISION 10-23-13 | DATE PLOTTED => 21-OCT-2013 | TIME PLOTTED => 16:54

DIST.	COUNTY	ROUTE	KILOMETER POST TOTAL PROJECT	SHEET NO.	TOTAL SHEETS
04	SF	80	13.2/13.9	901R5	1204

REGISTERED ENGINEER - CIVIL

12-6-04
PLANS APPROVAL DATE

REGISTERED PROFESSIONAL ENGINEER Tien Hung Ho No. C 43990 Exp. 6/30/13 CIVIL STATE OF CALIFORNIA

The State of California or its officers or agents shall not be responsible for the accuracy or completeness of electronic copies of this plan sheet.

T.Y. LIN / MOFFATT & NICHOL
825 BATTERY STREET
SAN FRANCISCO, CA 94111

Caltrans now has a web site! To get to the web site, go to: http://www.dot.ca.gov

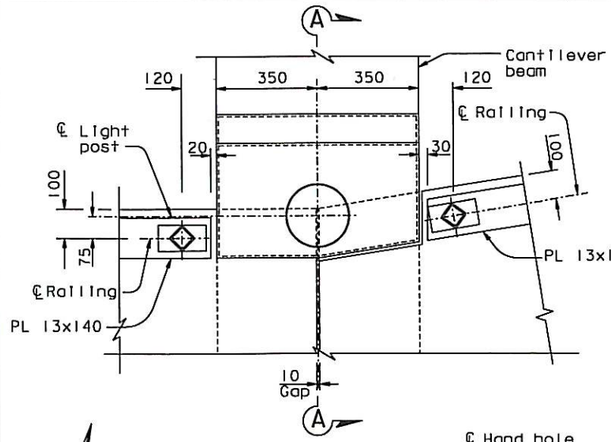

DETAIL A
1:10

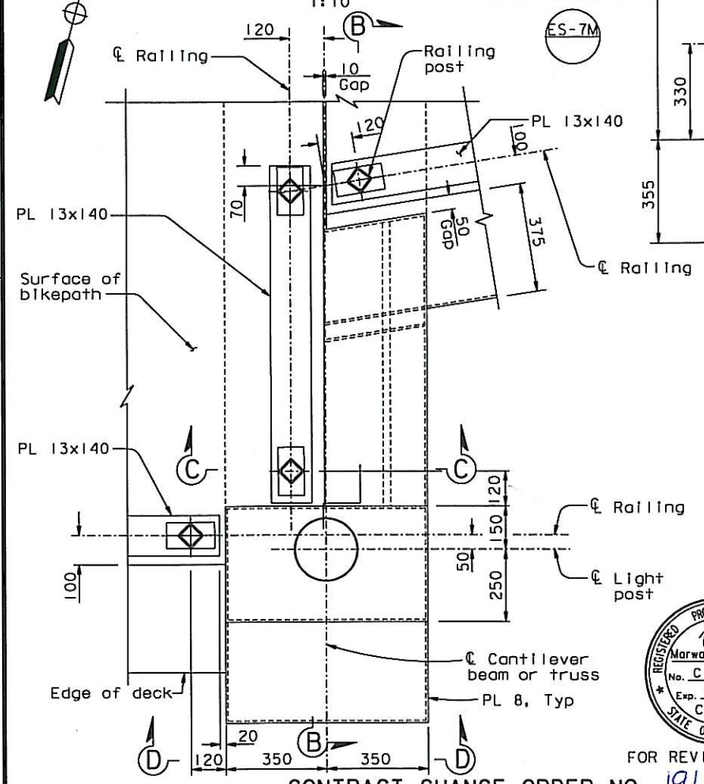

DETAIL B
1:10

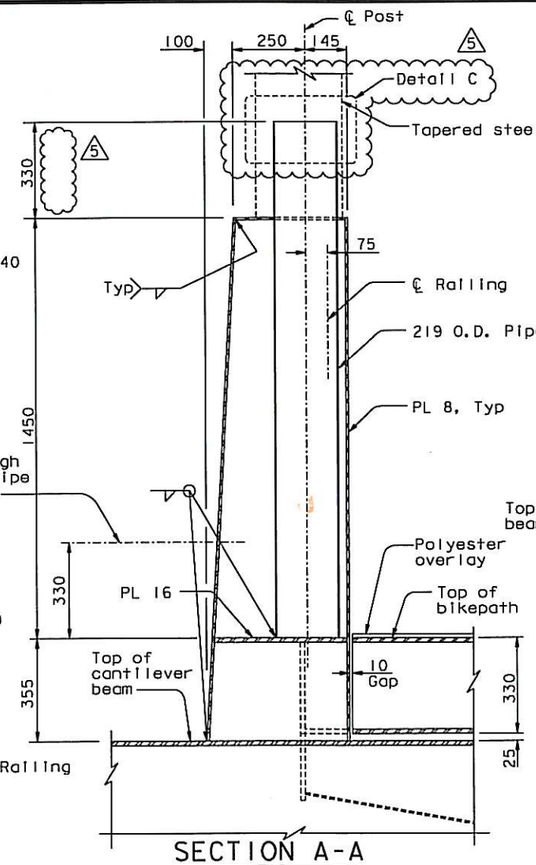

SECTION A-A
1:10

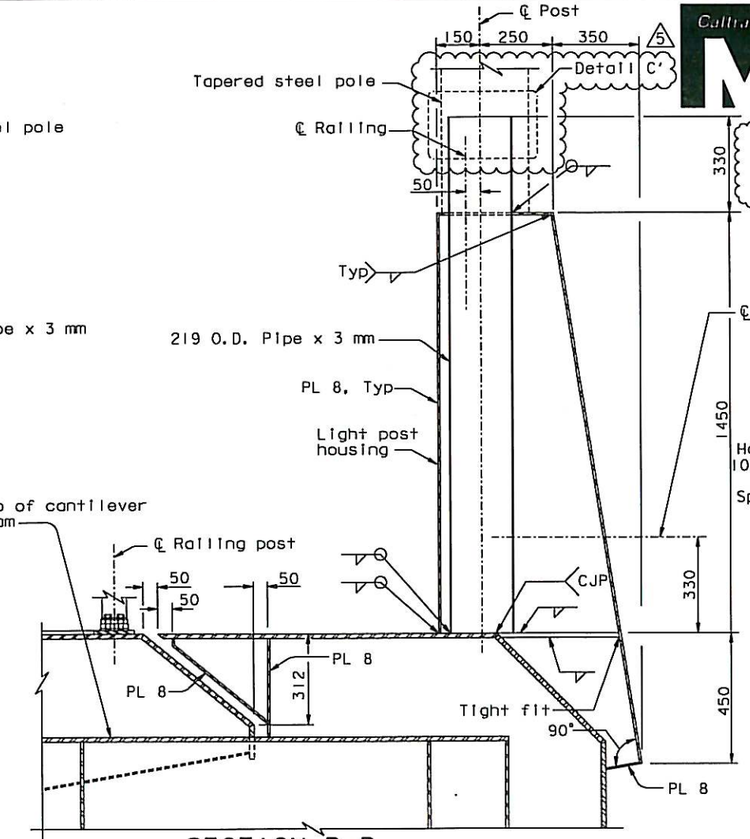

SECTION B-B
1:10

LIGHT POST HOUSING DETAILS AT BELVEDERES

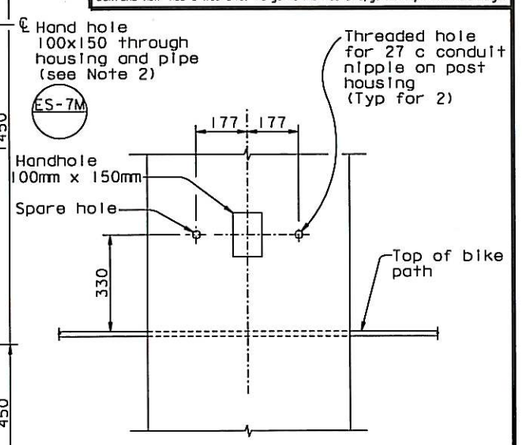

SECTION D-D
1:10

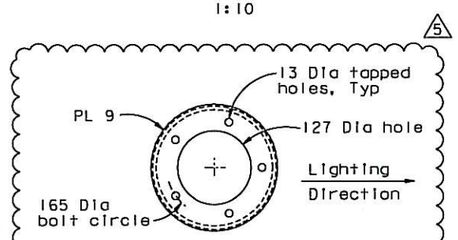

SECTION E-E
1:5
(Light pole not shown for clarity)

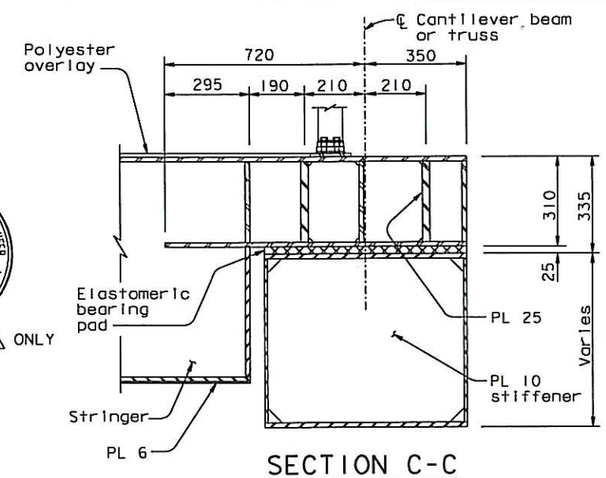

SECTION C-C
1:10

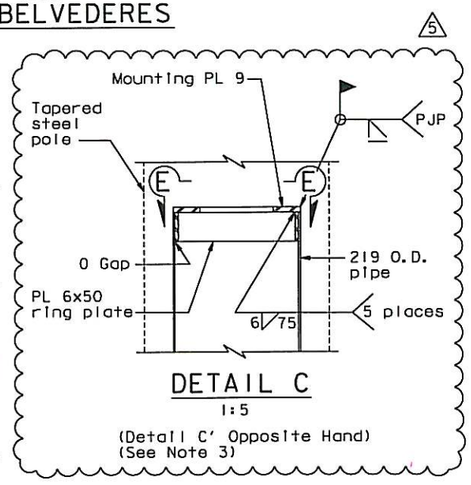

DETAIL C
1:5
(Detail C' Opposite Hand)
(See Note 3)

NOTES:

1. For tapered steel pole slip joint details, see "Road Plans".
2. Hand hole cover for exterior opening only. Cover shall be a "Tamper Resistant Handhole Cover" per Caltrans Standard ES-7M.
3. Mounting plate and ring plate shall be ASTM A36 steel.

100 % PS&E

ALL DIMENSIONS ARE IN MILLIMETERS UNLESS OTHERWISE SHOWN

CONTRACT CHANGE ORDER NO. 191S2
SHEET 40 OF 40

FOR REVISION 5 ONLY

REGISTERED PROFESSIONAL ENGINEER Marwan N. Nader No. C 054426 Exp. 12/31/13 CIVIL STATE OF CALIFORNIA

REQUESTS FOR INFORMATION NOT ADDRESSED IN THIS CCO REMAIN IN FORCE

MARK	DATE	DESCRIPTIONS	BY	CH'D	CCO#
5	03/08/13	ADDITIONAL MISCELLANEOUS ELECTRICAL	DT	MN	191S2
4	04/01/11	BIKEPATH CONDUIT	TH	JD	73
3	08/20/10	BIKEPATH DETAILS	CC	TH	99
2	05/28/10	BIKEPATH CONDUIT	AB	TH	73
1	09/25/09	BIKEPATH DETAILS	TH	HT	99

REVISIONS

R. Vollzadeh/V. Toon/Y.L./W.L./F.C.
DESIGN OVERSIGHT
Roya Vollzadeh / Vong Toon / Y. Liu
SIGN OFF DATE 03/08/13

Rev. Date: 5-18-08

DESIGN	BY T. Ho	CHECKED C. Redfield	
DETAILS	BY R. Xu	CHECKED C. Redfield	
QUANTITIES	BY G. Baker	CHECKED K. Cormier	

PREPARED FOR THE STATE OF CALIFORNIA DEPARTMENT OF TRANSPORTATION

R. Manzanarez
PROJECT ENGINEER

BRIDGE NO. 34-0006L/R
KILOMETER POST 13.2/13.9

SAN FRANCISCO OAKLAND BAY BRIDGE
EAST SPAN SEISMIC SAFETY PROJECT
SELF-ANCHORED SUSPENSION BRIDGE
(SUPERSTRUCTURE & TOWER)

RAILING DETAILS NO. 4

ORIGINAL SCALE IN MILLIMETERS FOR REDUCED PLANS 0 10 20 30 40 50 60 70 80 90 100

CU 04
EA 0120F1

DISREGARD PRINTS BEARING EARLIER REVISION DATES

REVISION DATES (PRELIMINARY STAGE ONLY) 05/12/99 09/06/99 05/31/01 01/08/02 01/09/02 12/13/02

SHEET 484R5 OF

FILE => I:\bb\04-012001\sas\contract plans and cco\cco\cco#191s2\1-original 03-08-13\dgn\okrlg07.dgn

USERNAME => DWinrow DATE PLOTTED => 08 MAR 2013 TIME PLOTTED => 09:05:43