DIST	COUNTY	ROUTE	KILOMETER POST TOTAL PROJECT	SHEET No	TOTAL SHEETS
04	SF	80	13.2/13.9	165 S1R2	1204

REGISTERED ELECTRICAL ENGINEER — DATE 8/11/08

PLANS APPROVAL DATE

REGISTERED PROFESSIONAL ENGINEER — FADI WALIEDDINE No. 11465 Exp. 12/31/2009 ELECTRICAL — STATE OF CALIFORNIA

PB AMERICAS, Inc.
A Parsons Brinckerhoff Company
303 Second St., Suite 700N
San Francisco, CA 94107-1317

The State of California or its officers or agents shall not be responsible for the accuracy or completeness of electronic copies of this plan sheet.

Caltrans now has a web site! To get to the web site, go to http://www.dot.ca.gov

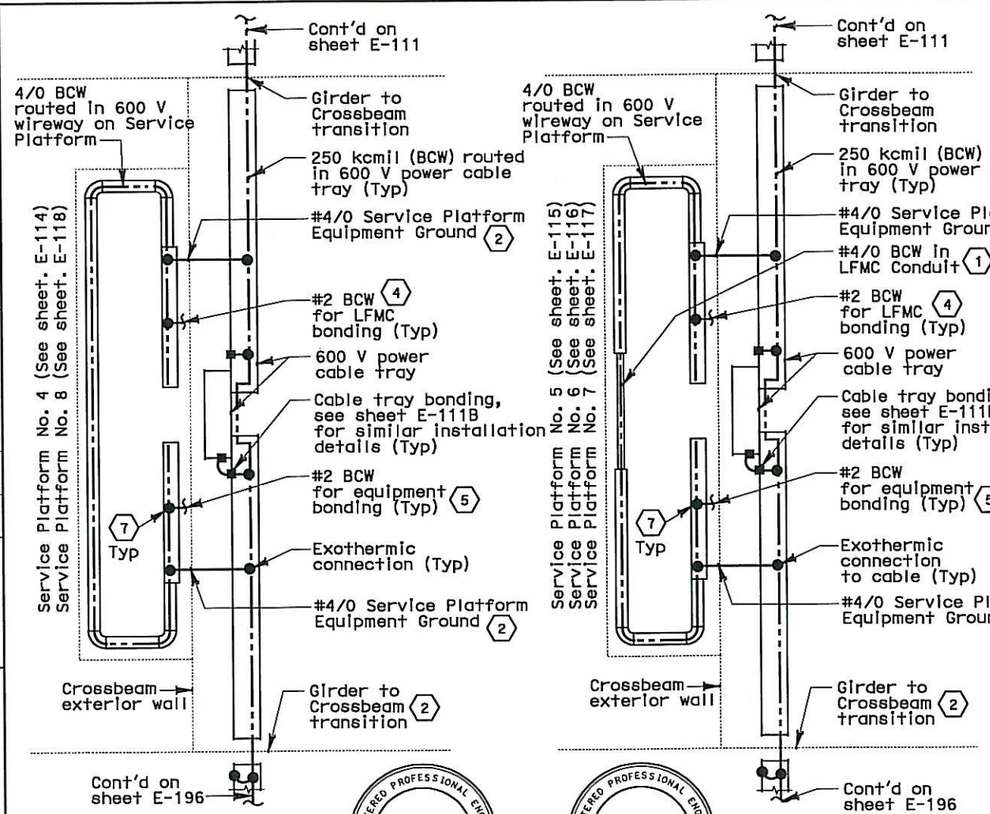

DETAIL 6

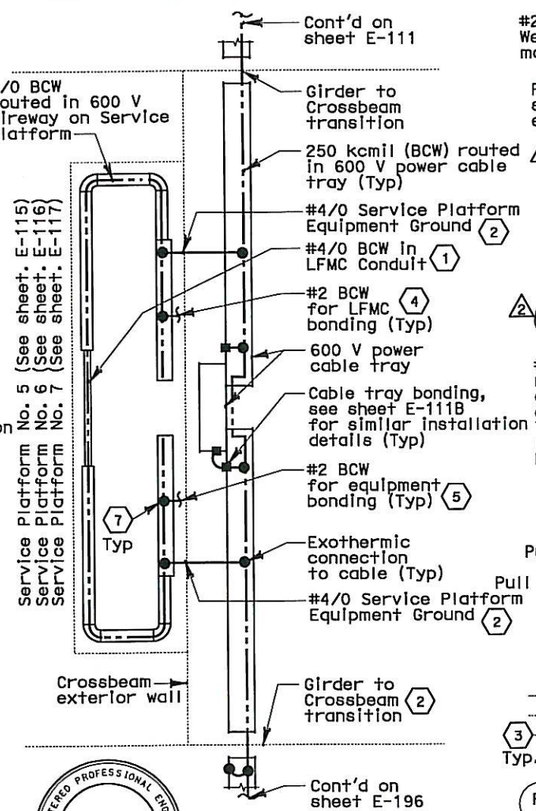

DETAIL 7

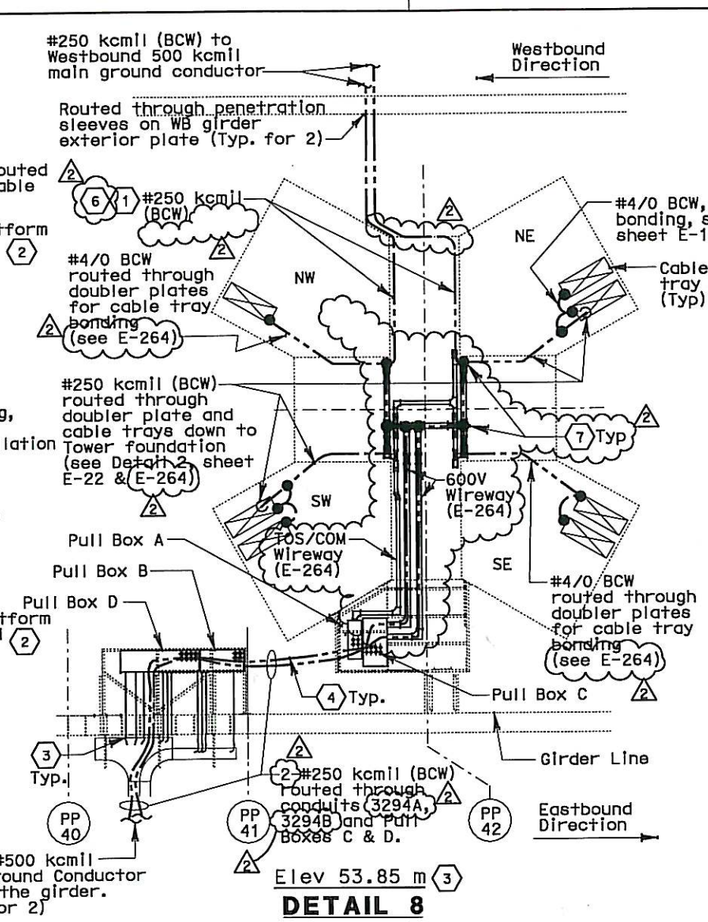

DETAIL 8

SHEET NOTES:

(1) Ground conductor shall be protected from damage when exposed outside the structures. Route ground cable in liquidtight flexible metal conduit (LFMC) for protection, unless routed in cable tray or wireway unless noted otherwise.

(2) Route #4/0 BCW through crossbeam exterior wall in liquidtight flexible metal conduit via conduit sleeves, see sheets E-114, E-115, E-116, E-117 and E-118.

(3) Install #2 BCW grounding conductors to grounding bushing for bonding conduits to cable tray.

(4) Install #2 BCW inside each liquidtight flex metal conduit and connect between the grounding wire and the conduit grounding bushing, see Detail 7 on sheet E-111B for similar installation.

(5) Ground conductor for equipment bonding shall be routed in the same conduit connected to equipment, see sheets E-71A, E-72A, E-73A, E-74A, E-75A, E-114, E-115, E-116, E-117 and E-118 for equipment arrangement.

(6) Grounding wire splices exposed outside the structures shall be enclosed with NEMA 4X pull box for protection. Where required, mechanical connection using Burndy Versitap Type QPX clamps or equal may be used for splices inside the box in lieu of exothermic weld. Pull box shall be 457 x 305 x 152D or size as required.

(7) Where exothermic weld connection is not feasible inside the wireway, compression type connectors may be used.

NOTES:

1. See sheet E-111 for additional notes and sheet notes.
2. The contractor shall install pull box/JB(s) along conduit runs to limit bends to be three (3) 90 degrees or fewer.

REGISTERED PROFESSIONAL ENGINEER — SYN YEE CHIN No. 18186 Exp. 09/30/2011 ELECTRICAL — STATE OF CALIFORNIA

FOR REVISION ONLY (1)

REGISTERED PROFESSIONAL ENGINEER — DAVID H. OTO No. 10699 Exp. 06/30/2013 ELECTRICAL — STATE OF CALIFORNIA

FOR REVISION ONLY (2)

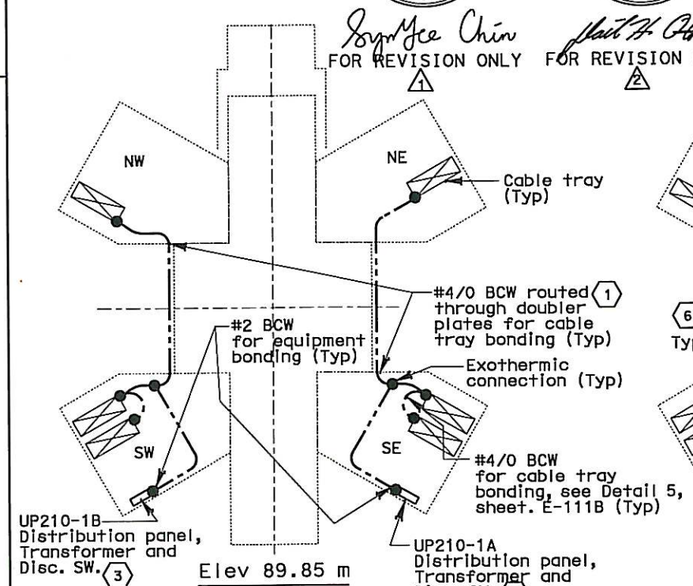

DETAIL 9

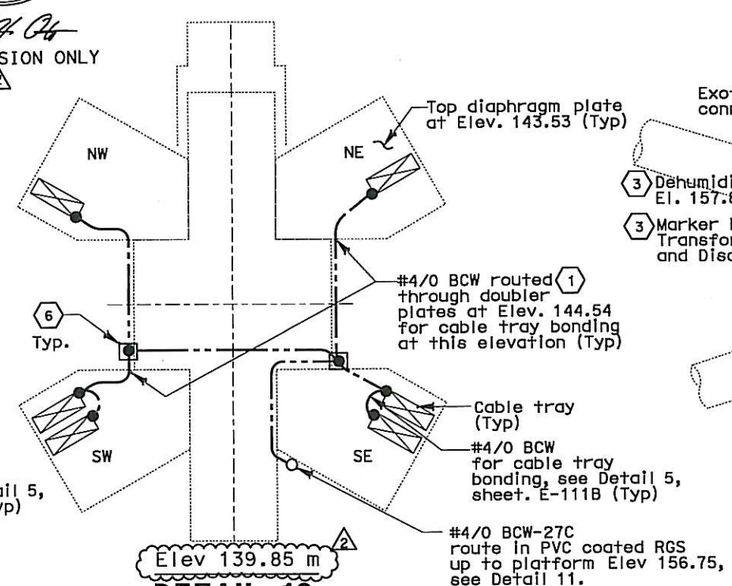

DETAIL 10

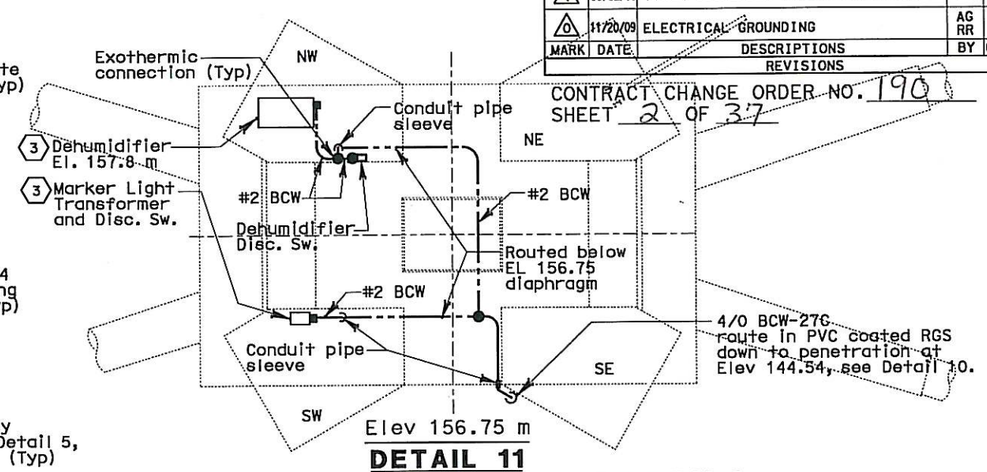

DETAIL 11

REQUEST FOR INFORMATION NOT ADDRESSED IN THIS CCO REMAIN IN FORCE

MARK	DATE	DESCRIPTIONS	BY	CH'D	CCO#
2	12/21/11	ELECTRICAL CHANGE FOR ELEVATION 53 IMPROVEMENTS	TW	RG	190
1	09/02/11	TOWER SUSPENDER CABLE & ELEVATOR	RM	TW	203S1
0	11/20/09	ELECTRICAL GROUNDING	AG RR	RG	75

REVISIONS

CONTRACT CHANGE ORDER NO. 190
SHEET 2 OF 37

DETAILS
SAS SUPERSTRUCTURE GIRDER WESTBOUND GROUNDING DETAILS
NO SCALE

E-111A

CALCULATED/ DESIGNED BY	CHECKED BY	AWG	RG	DATE 08/08	08/08	REVISED BY	DATE REVISED

DESIGN OVERSIGHT — BEHZAD GOLEMOHAMMADI

STATE OF CALIFORNIA - DEPARTMENT OF TRANSPORTATION — Caltrans

THIS PLAN IS ACCURATE FOR ELECTRICAL WORK ONLY.

ALL DIMENSIONS ARE IN MILLIMETERS UNLESS OTHERWISE SHOWN.

FOR REDUCED PLANS ORIGINAL SCALE IS IN MILLIMETERS 0 20 40 60 80

DGN FILE =>04-0120F1_0165S01R02.dgn
USERNAME =>llorico

CU 04251 | EA 0120F1

LAST REVISION 12-21-11 | DATE PLOTTED => 21-DEC-2011 | TIME PLOTTED => 08:54

REQUEST FOR INFORMATION NOT ADDRESSED IN THIS CCO REMAIN IN FORCE					
3	01/25/12	ELECTRICAL CHANGES FOR ELEVATION 53 IMPROVEMENTS	TW EC	RG RM	190
2	12/02/09	TOWER UTILITY PANELS	TW	RG FW	70
1	02/19/08	ELECTRICAL MODIFICATIONS	MP EL	RR	42
MARK	DATE	DESCRIPTIONS	BY	CH'D	CCO#
		REVISIONS			

CONTRACT CHANGE ORDER NO. 190
SHEET 3 OF 37

DIST	COUNTY	ROUTE	KILOMETER POST TOTAL PROJECT	SHEET No	TOTAL SHEETS
04	SF	80	13.2/13.9	270 R3	1204

REGISTERED ELECTRICAL ENGINEER 12/19/02 DATE

12-6-04
PLANS APPROVAL DATE

REGISTERED PROFESSIONAL ENGINEER JENS ERLINGSSON No. 8249 Exp. 9/30/06 ELECTRICAL STATE OF CALIFORNIA

PB POWER, Inc.
A Parsons Brinckerhoff Company
303 Second St., Suite 700N
San Francisco, CA 94107-1317

The State of California or its officers or agents shall not be responsible for the accuracy or completeness of electronic copies of this plan sheet.

Caltrans now has a web site! To get to the web site, go to http://www.dot.ca.gov

Caltrans Metric

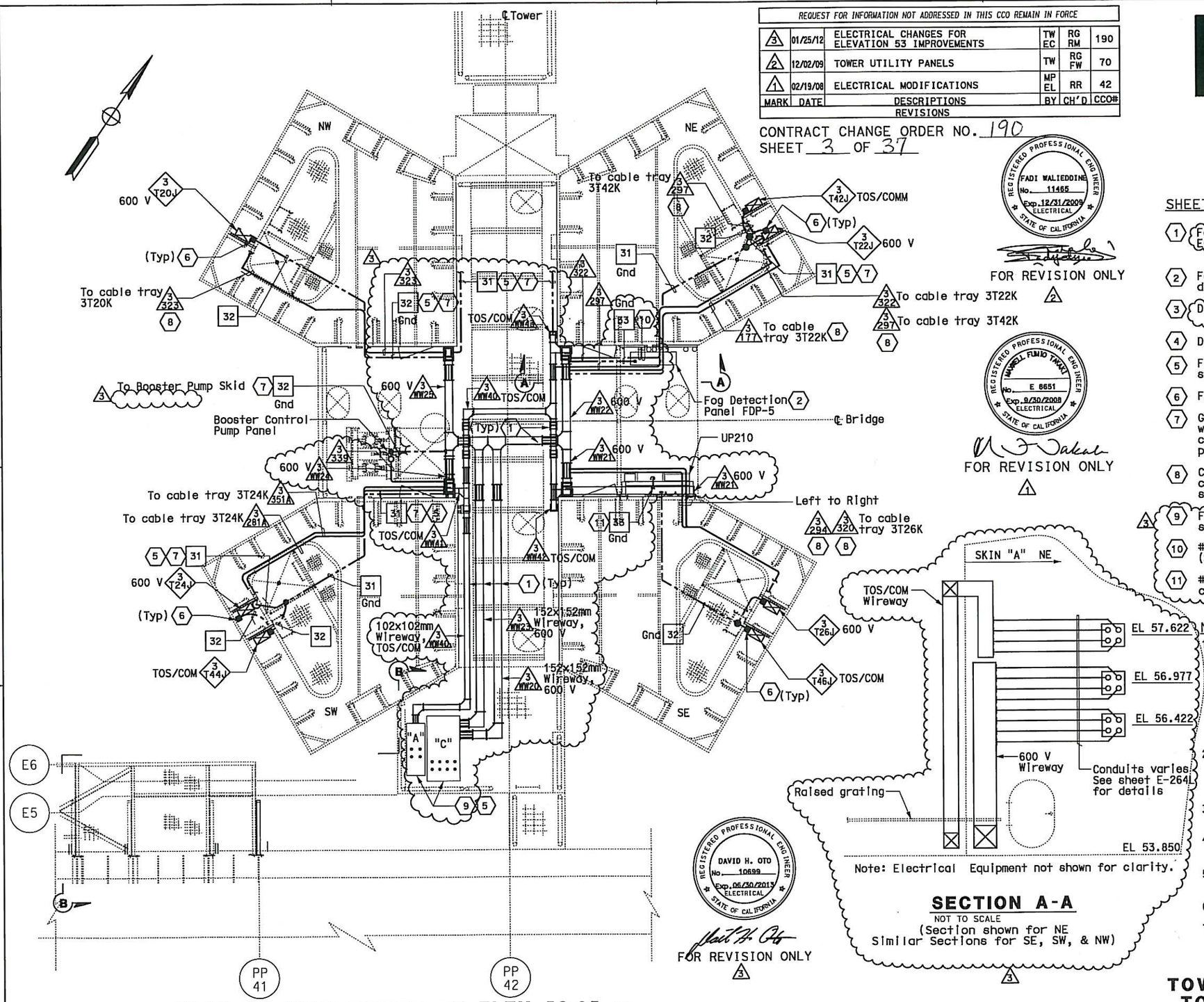

PLAN AT MAIN TOWER AT ELEV 53.85 m AND WALKWAY/ACCESS PLATFORM TO "E" LINE GIRDER

SCALE 1:40

TOS and Lighting conduits & equipment are not shown for clarity. See sheet E-264B for lighting layout. For TOS conduits, see E-281.

THIS PLAN ACCURATE FOR ELECTRICAL WORK ONLY.

ALL DIMENSIONS ARE IN MILLIMETERS UNLESS OTHERWISE SHOWN.

SECTION A-A

NOT TO SCALE
(Section shown for NE
Similar Sections for SE, SW, & NW)

FOR REVISION ONLY

SHEET NOTES:

1. For wireway layout and details see sheet E-264J. (3)
2. For FDP-5 location, conduit route and mounting details, see sheets E-293 and AS-13E.
3. Deleted. (3)
4. Deleted. (3)
5. For continuation and grounding installation details, see Detail 8, sheet E-111A.
6. For cable tray bonding, see Details 4 & 5, sheet E-111B.
7. Ground conductor shall be protected from damage when exposed outside the structures. Route ground cable in liquidtight flexible metal conduit (LFMC) for protection.
8. Conduits are at El. 56.422 and connected to 600 V cable tray at this elevation inside respective tower shaft.
9. For location and fabrication details of pull boxes, see sheets E-264A, E-264G and E-164H. (3)
10. #2 bare copper wire (bonding jumper) routed inside conduit (See sheet E-293). (8/011)
11. #2 bare copper wire conduit (3/380) and wireway (3/WW21) (bonding jumper) routed inside (See sheet E-264C).

NOTES:

1. References:
   - For typical conduit installation details, see sheet E-268.
   - For utility panel UP-210 schedule, see sheet E-278.
   - For types of pull boxes, splice boxes and enclosures, see sheets E-83 and E-169.
   - For conduit and cable tray schedules, see sheets starting at E-401.
2. Electrical conduits shall enter the tower shafts between stiffeners A3 and A4 only for conduits going up or down inside the tower shafts between C1 and C2 only. For conduit entry details, see Structural Utility drawings.
3. All conduits and fittings routed exposed at grating shall be rigid galvanized steel, PVC coated.
4. For lighting installation and details, see sheet E-264B and E-264C
5. For other related work not shown on this sheet, see Electrical Special Provisions.
6. For Section B-B, see sheet E-264A
7. Typical conduit installation. See Detail 8, sheet E-268.

DETAILS
TOWER AND SUSPENSION CABLE
TOWER POWER AND LIGHTING

SCALE AS NOTED

E-264

STATE OF CALIFORNIA - DEPARTMENT OF TRANSPORTATION
Caltrans

DESIGN OVERSIGHT: BEHZAD GOLEMOHAMMADI

CALCULATED/DESIGNED BY: FK | CHECKED BY: EDC | DATE 10/01: 11/01 | REVISED BY | DATE REVISED

LAST REVISION 12-21-11 | DATE PLOTTED => 24-JAN-2012 | TIME PLOTTED => 16:08

FOR REDUCED PLANS ORIGINAL SCALE IS IN MILLIMETERS 0 20 40 60 80

DGN FILE =>04-0120f1_0270R03.dgn
USERNAME =>llorico

CU 04251 | EA 0120F1

DIST	COUNTY	ROUTE	KILOMETER POST TOTAL PROJECT	SHEET No	TOTAL SHEETS
04	SF	80	13.2/13.9	271 R6	1204

REGISTERED ELECTRICAL ENGINEER 12/19/02 DATE

12-6-04
PLANS APPROVAL DATE

REGISTERED PROFESSIONAL ENGINEER JENS ERLINGSSON No. 8249 Exp. 9/30/06 ELECTRICAL STATE OF CALIFORNIA

PB POWER, Inc.
A Parsons Brinckerhoff Company
303 Second St., Suite 700N
San Francisco, CA 94107-1317

The State of California or its officers or agents shall not be responsible for the accuracy or completeness of electronic copies of this plan sheet.

Caltrans now has a web site! To get to the web site, go to http://www.dot.ca.gov

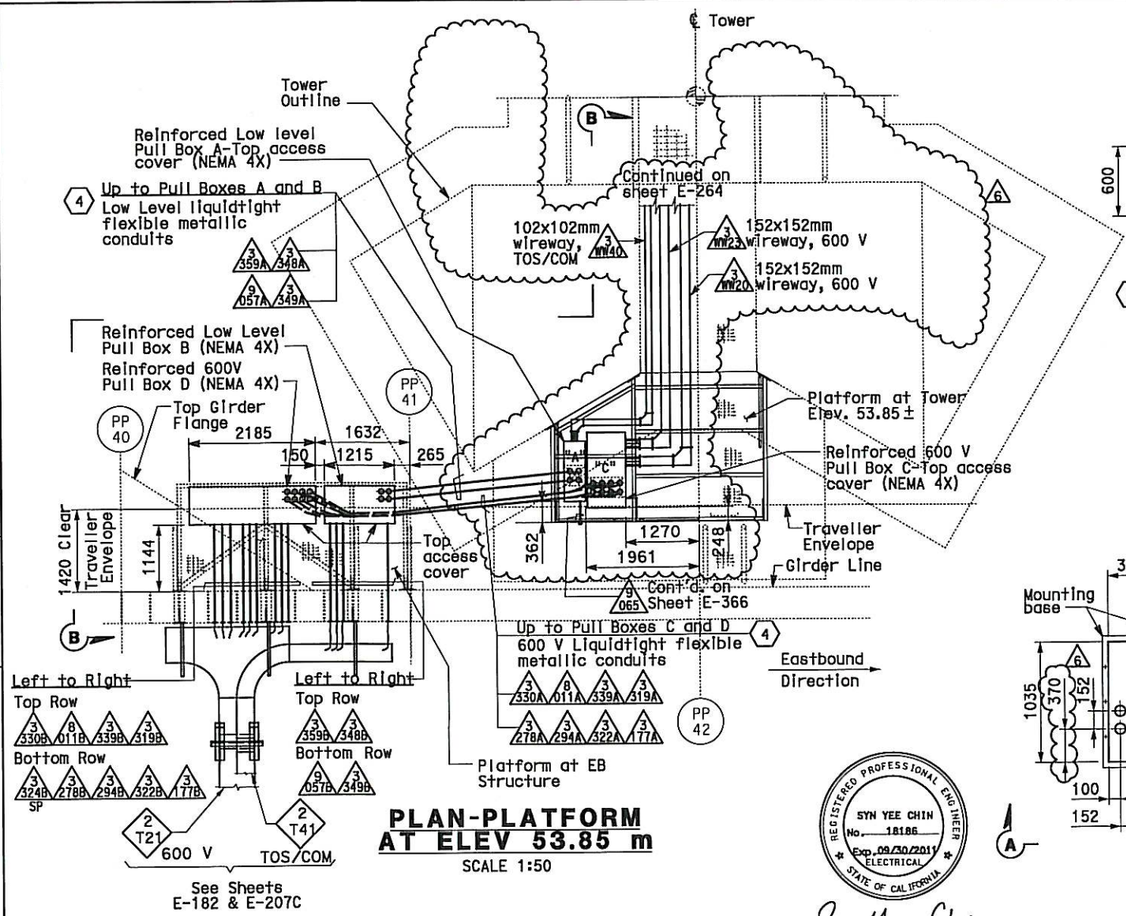

PLAN-PLATFORM AT ELEV 53.85 m

SCALE 1:50

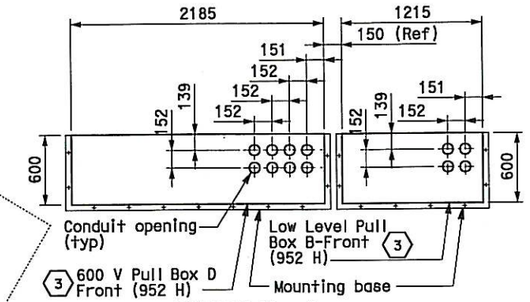

DETAIL 1

BOTTOM PLAN OF PULL BOXES LOCATED AT EB STRUCTURE PLATFORM
SCALE 1:25

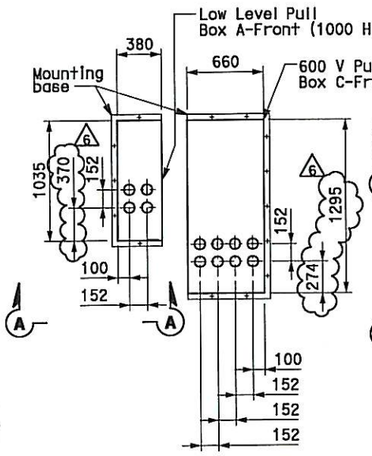

DETAIL 2

BOTTOM PLAN OF PULL BOXES LOCATED AT TOWER PLATFORM
SCALE 1:25

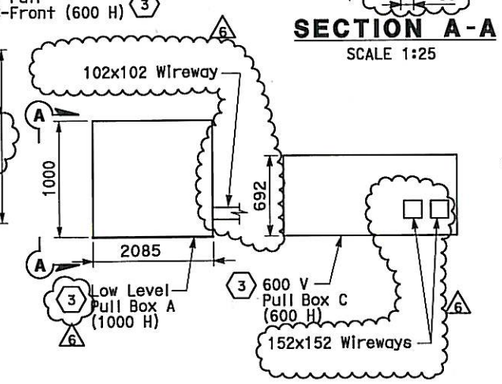

DETAIL 3

FRONT ELEVATION OF PULL BOXES LOCATED AT TOWER PLATFORM
SCALE 1:25

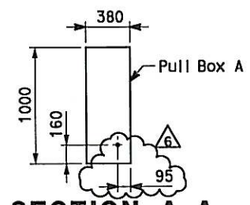

SECTION A-A

SCALE 1:25

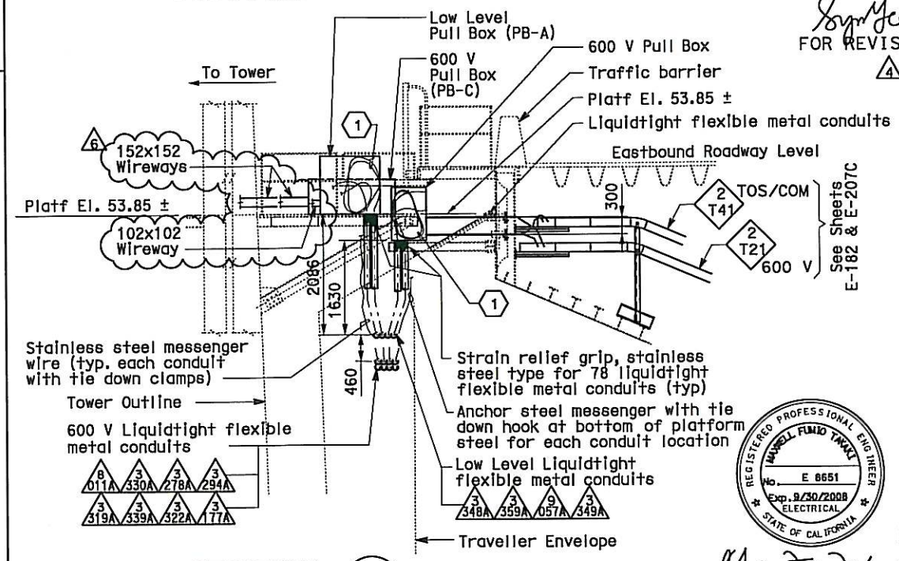

SECTION B

SCALE 1:50

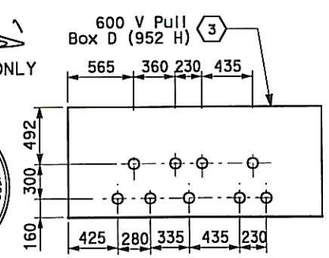

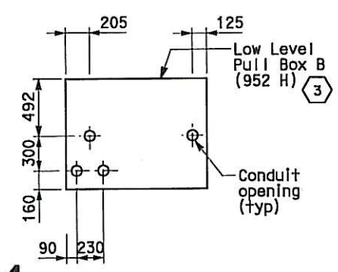

DETAIL 4

FRONT ELEVATION OF PULL BOXES LOCATED AT EB STRUCTURE PLATFORM
SCALE 1:25

FOR REVISION ONLY 5 6

FOR REVISION ONLY 4

FOR REVISION ONLY 3

FOR REVISION ONLY 2

FOR REVISION ONLY 1

SHEET NOTES

1. Coil 3 meters long of cable for each circuits inside the pull boxes.
2. Deleted.
3. For additional fabrication details of pull boxes, see sheets E-264G and E-264H.
4. Electrical conduit design between Eastbound Structure and Main Tower is based on the maximum expansion of 1000 mm all directions. For conduit support, see E-78H.

NOTES

1. For location of sleeves Eastbound Structure PP-40 and PP-41, see Structural Plans.
2. Each liquidtight flexible metallic conduit shall be provided with #6 green insulated ground conductor inside the conduit.
3. Contractor shall verify all the conduit opening prior to start of work.
4. For wireway layout and details see sheet E-264J. 6

REQUEST FOR INFORMATION NOT ADDRESSED IN THIS CCO REMAIN IN FORCE

MARK	DATE	DESCRIPTIONS	BY	CH'D	CCO#
6	01/25/12	ELECTRICAL CHANGES FOR ELEVATION 53 IMPROVEMENTS	TW EC	RG RM	190
5	10/26/11	PLATFORM MODIFICATION	RM	DO CK	206
4	02/24/10	TOWER UTILITY PANELS	TW RB	RG SYC	70
3	10/03/08	STRONG MOTION SYSTEM	TW	RG FW	74
2	02/25/08	CABLE TRAY CHANGES	MP	RG SE	42S1
1	02/19/08	ELECTRICAL MODIFICATIONS	MP EL	RR	42

REVISIONS

CONTRACT CHANGE ORDER NO. 190
SHEET 4 OF 37

DETAILS
TOWER AND SUSPENSION CABLE

SCALE: AS NOTED

E-264A

ALL DIMENSIONS ARE IN MILLIMETERS UNLESS OTHERWISE SHOWN.

THIS PLAN ACCURATE FOR ELECTRICAL WORK ONLY.

STATE OF CALIFORNIA - DEPARTMENT OF TRANSPORTATION

DESIGN OVERSIGHT BEHZAD GOLEMOHAMMADI

CALCULATED/DESIGNED BY EJL CHECKED BY JE

DATE 3/04 REVISED BY DATE 3/04 REVISED

LAST REVISION 12-21-11 DATE PLOTTED => 24-JAN-2012 TIME PLOTTED => 16:08

FOR REDUCED PLANS ORIGINAL SCALE IS IN MILLIMETERS 0 20 40 60 80

DGN FILE =>04-0120f1_0271R06.dgn
USERNAME =>llorico

CU 04251 EA 0120F1

DIST	COUNTY	ROUTE	KILOMETER POST TOTAL PROJECT	SHEET No	TOTAL SHEETS
04	SF	80	13.2/13.9	271 S1R1	1204

REGISTERED ELECTRICAL ENGINEER 9/11/08 DATE

PLANS APPROVAL DATE

REGISTERED PROFESSIONAL ENGINEER FADI WALIEDDINE No. 11465 Exp. 12/31/2009 ELECTRICAL STATE OF CALIFORNIA

PB AMERICAS, Inc.
A Parsons Brinckerhoff Company
303 Second St., Suite 700N
San Francisco, CA 94107-1317

The State of California or its officers or agents shall not be responsible for the accuracy or completeness of electronic copies of this plan sheet.

Caltrans now has a web site! To get to the web site, go to http://www.dot.ca.gov

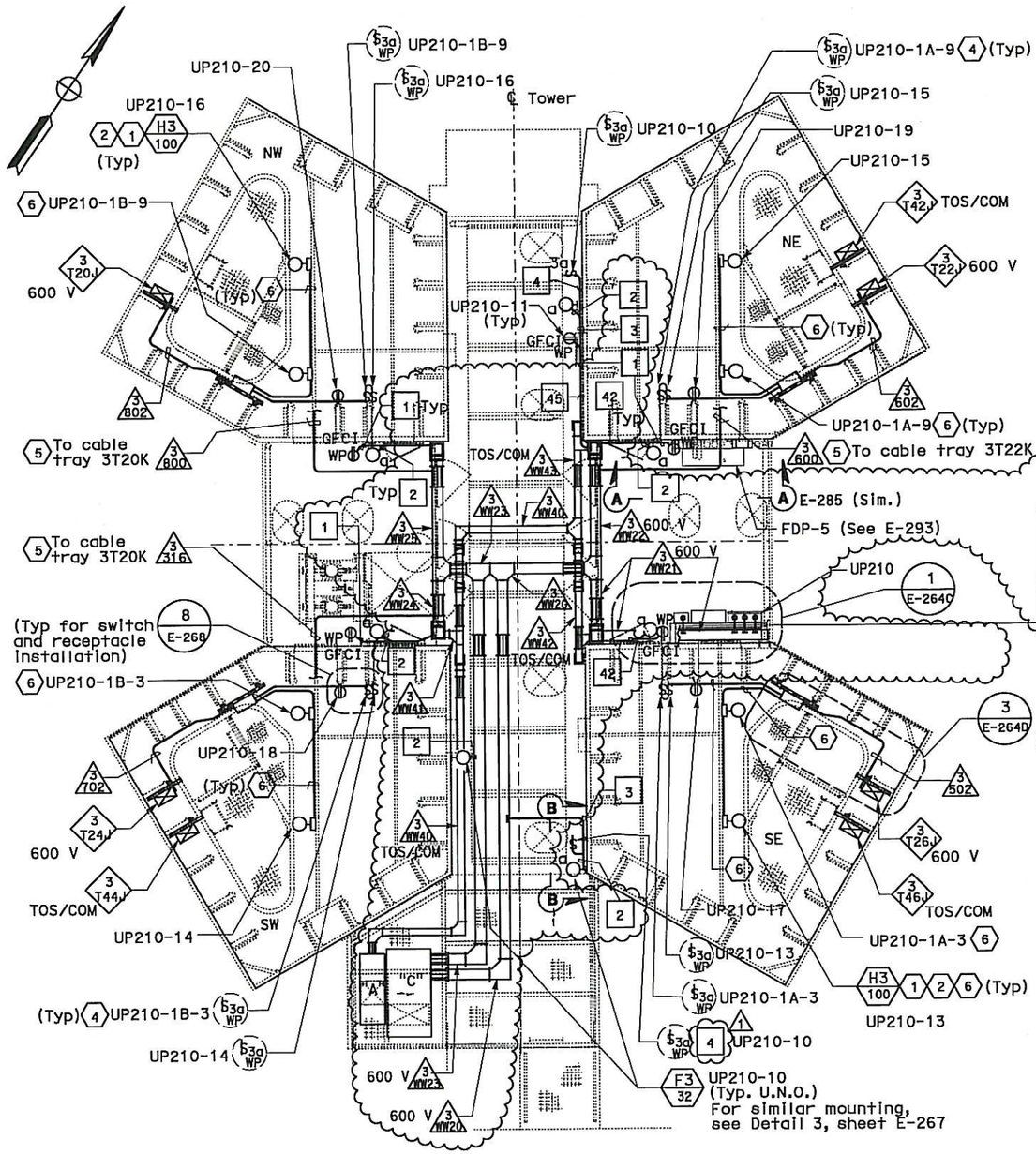

PLAN AT MAIN TOWER AT ELEV 53.85 m

SCALE 1:40

Some conduit & equipment are not shown for clarity. See sheet E-264 for layout of equipment. Circuits shown are for SE tower shaft. Circuit for other shafts shown on E-274, E-275 and E-275A.

SHEET NOTES:

1. Light shown mounted under ceiling diaphragm.
2. Typical light mounting details shown on sheet E-283.
3. Deleted
4. Multiple switches at certain elevations. See sheets E-284, E-284A and E-284B for details.
5. Conduits are at El. 56.422 and connected to 600 V cable tray at this elevation ~~inside respective tower shaft.~~ see Detail 3 on sheet E-264L.
6. Number and sizes of conduit are field route to lights, receptacles and switches. See E-284 and E-284A for conduit sizes and pull box type per location.
7. Install #2 Bare copper wire (bonding jumper) in conduit and wireway.

NOTES:

1. References:
   - For typical conduit installation details, see sheet E-268.
   - For utility panel UP-210 schedule, see sheet E-278.
   - For types of pull boxes, splice boxes and enclosures, see sheets E-83 and E-169.
   - For conduit and cable tray schedules, see sheets starting at E-401.
   - For lighting fixture schedule, see sheet E-273.
   - For lighting installation details, see sheet E-267.
2. Electrical conduits shall enter the tower shafts between stiffeners A3 and A4 only for conduits going up or down inside the tower shafts between C1 and C2 only For conduit entry details, see Structural Utility drawings.
3. All conduits and fittings routed exposed at grating shall be rigid galvanized steel, PVC coated.
4. Fixture mounting height elevation shall be 2.125 m above floor/platform elevation UNO.
5. For other related work not shown on this sheet, see Electrical Special Provisions.
6. For Section A-A, see sheet E-285.
7. Typical conduit installation. See Detail 8, sheet E-268.
8. For wireway layout and details see sheet E-264J.

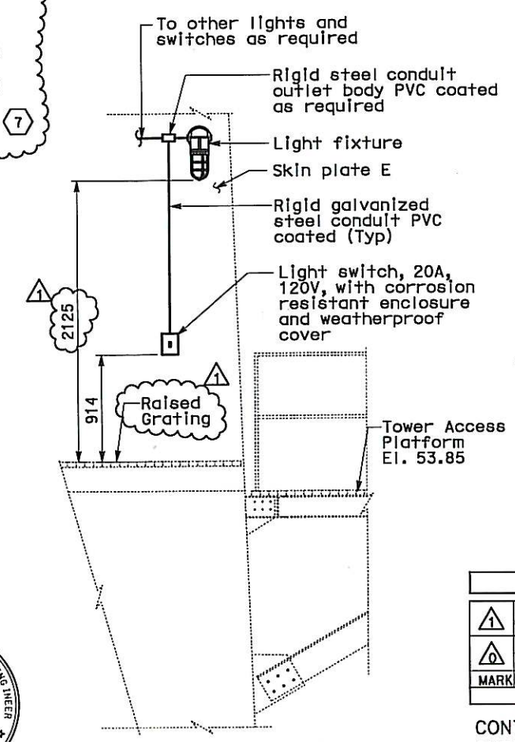

SECTION B-B

NO SCALE

REGISTERED PROFESSIONAL ENGINEER DAVID H. OTO No. 10699 Exp. 06/30/2013 ELECTRICAL STATE OF CALIFORNIA

FOR REVISION ONLY

REQUEST FOR INFORMATION NOT ADDRESSED IN THIS CCO REMAIN IN FORCE					
1	01/25/12	ELECTRICAL CHANGES FOR ELEVATION 53 IMPROVEMENTS	TW EC	RG RM	190
0	12/11/09	TOWER UTILITY PANELS	JS TW	RG FW	70
MARK	DATE	DESCRIPTIONS	BY	CH'D	CCO#
		REVISIONS			

CONTRACT CHANGE ORDER NO. 190
SHEET 5 OF 37

DETAILS
TOWER AND SUSPENSION CABLE
TOWER POWER AND LIGHTING

SCALE AS NOTED

E-264B

REVISED BY	DATE REVISED
FK	10/01
EDC	11/01

CALCULATED/DESIGNED BY
CHECKED BY

DESIGN OVERSIGHT
BEHZAD GOLEMOHAMMADI

STATE OF CALIFORNIA - DEPARTMENT OF TRANSPORTATION

Caltrans

THIS PLAN ACCURATE FOR ELECTRICAL WORK ONLY.

ALL DIMENSIONS ARE IN MILLIMETERS UNLESS OTHERWISE SHOWN.

FOR REDUCED PLANS ORIGINAL SCALE IS IN MILLIMETERS 0 20 40 60 80

DGN FILE =>04-0120f1_0271S01R01.dgn
USERNAME =>llorico

CU 04251

EA 0120F1

LAST REVISION 12-21-11

DATE PLOTTED => 24-JAN-2012
TIME PLOTTED => 16:08

DIST	COUNTY	ROUTE	KILOMETER POST TOTAL PROJECT	SHEET No	TOTAL SHEETS
04	SF	80	13.2/13.9	271 S2R1	1204

Syn Yee Chin 2/24/10
REGISTERED ELECTRICAL ENGINEER DATE

REGISTERED PROFESSIONAL ENGINEER SYN YEE CHIN No. 18186 Exp. 09/30/2011 ELECTRICAL STATE OF CALIFORNIA

PLANS APPROVAL DATE

PB AMERICAS, Inc.
A Parsons Brinckerhoff Company
303 Second St., Suite 700N
San Francisco, CA 94107-1317

The State of California or its officers or agents shall not be responsible for the accuracy or completeness of electronic copies of this plan sheet.

Caltrans now has a web site! To get to the web site, go to http://www.dot.ca.gov

Caltrans Metric

NOTES:

1. References:
   - For utility panel UP-210 schedule, see sheet E-278.
   - For conduit and cable tray schedules, see sheets starting at E-401.
   - For lighting fixture schedule, see sheet E-273.
   - For vertical conduit runs support system, see sheet E-287.
   - For lighting installation details, see sheet E-267.
2. All conduits and fittings routed exposed at grating shall be rigid galvanized steel, PVC coated, UNO.
3. Fixture mounting height elevation shall be 2.125 m above floor/platform elevation UNO.

REQUEST FOR INFORMATION NOT ADDRESSED IN THIS CCO REMAIN IN FORCE

MARK	DATE	DESCRIPTIONS	BY	CH'D	CCO#
1	01/25/12	ELECTRICAL CHANGES FOR ELEVATION 53 IMPROVEMENTS	TW	RG	190
0	02/24/10	TOWER UTILITY PANELS	JS TW	RG SYC	70

REVISIONS

CONTRACT CHANGE ORDER NO. 190
SHEET 6 OF 37

REGISTERED PROFESSIONAL ENGINEER DAVID H. OTO No. 10699 Exp. 06/30/2013 ELECTRICAL STATE OF CALIFORNIA

FOR REVISION ONLY 1

SHEET NOTES:

1. Bolt lengths to be long enough to fully engage all materials through which they pass, including all washers and nuts, and where attaching to structural steel be anchored in threads to a depth at least 1.2 times the bolt diameter. Holes in structural members shall be drilled and bottom tapped to 5 mm minimum deeper than the depth to which the bolt will engage the steel.
2. 152 x 152mm, 316SS, Nema 4X wireway. with bracket hanger for mounting. 1
3. 102 x 102mm, 316SS, Nema 4X wireway. with bracket hanger for mounting. 1
4. Install #2 bare copper wire (bonding jumper) inside conduit and connect to conduit insulated grounding bushing and to enclosure grounding terminal. Use servit post Burndy Type KC or equal inside bottom of the enclosure when no factory grounding terminal is provided. See Detail 8, sheet E-111B for similar installation.

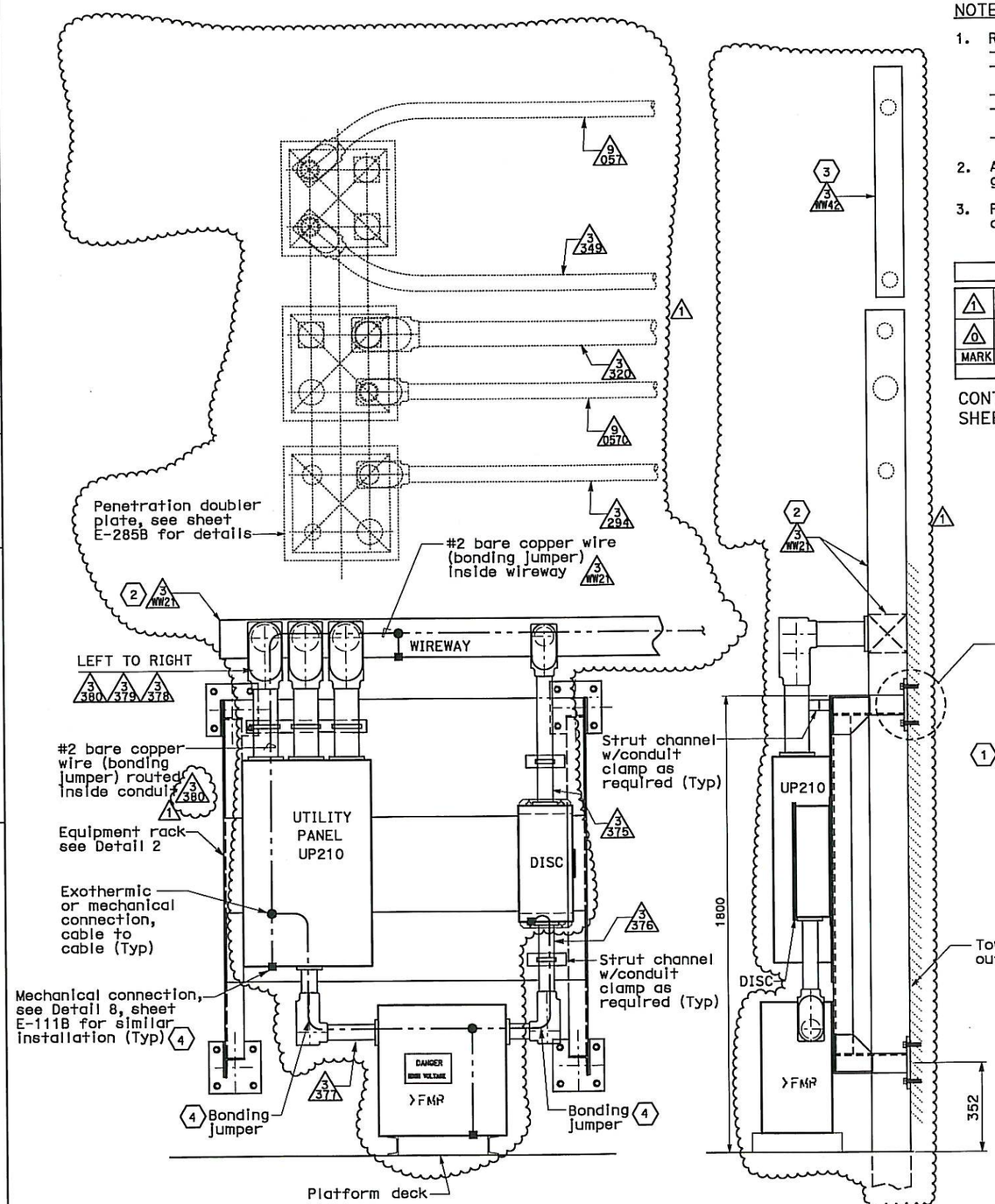

ELEVATION

SIDE VIEW
Conduit not shown for clarity

DETAIL 1
SCALE 1:10

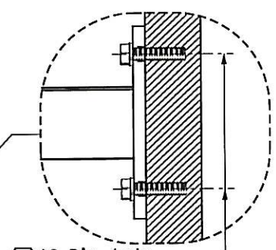

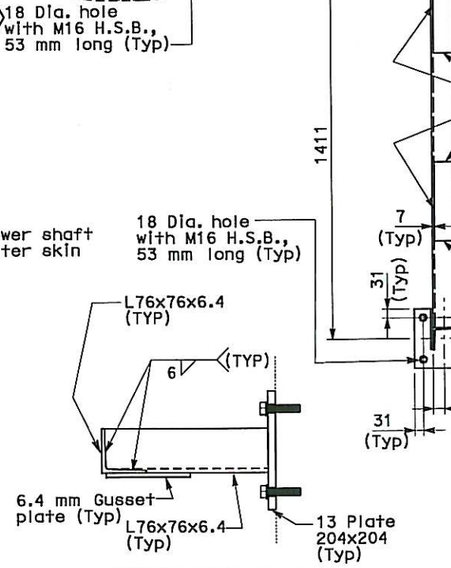

SECTION A-A
SCALE 1:5

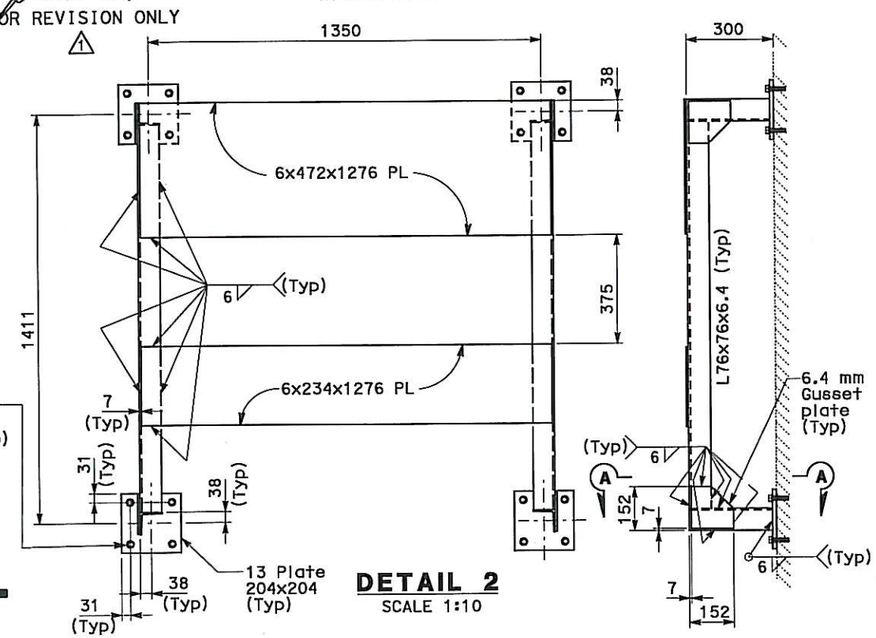

DETAIL 2
SCALE 1:10

DETAILS
TOWER AND SUSPENSION CABLE
TOWER POWER AND LIGHTING
SCALE: AS NOTED

E-264C

REVISED BY	DATE REVISED

CALCULATED/DESIGNED BY	CHECKED BY	DATE 10/01	11/01
FK	EDC		

DESIGN OVERSIGHT
BEHZAD GOLEMOHAMMADI

STATE OF CALIFORNIA - DEPARTMENT OF TRANSPORTATION
Caltrans

LAST REVISION 12-21-11
DATE PLOTTED => 24-JAN-2012
TIME PLOTTED => 16:09

THIS PLAN ACCURATE FOR ELECTRICAL WORK ONLY.

ALL DIMENSIONS ARE IN MILLIMETERS UNLESS OTHERWISE SHOWN.

FOR REDUCED PLANS ORIGINAL SCALE IS IN MILLIMETERS 0 20 40 60 80

DGN FILE =>04-0120f1_0271S02R01.dgn
USERNAME =>llorico

CU 04251 | EA 0120F1

DIST	COUNTY	ROUTE	KILOMETER POST TOTAL PROJECT	SHEET No	TOTAL SHEETS
04	SF	80	13.2/13.9	271 S4R1	1204

REGISTERED ELECTRICAL ENGINEER DATE

PLANS APPROVAL DATE

REGISTERED PROFESSIONAL ENGINEER FADI WALIEDDINE No. 11465 Exp. 12/31/2009 ELECTRICAL STATE OF CALIFORNIA

PB AMERICAS, Inc.
A Parsons Brinckerhoff Company
303 Second St., Suite 700N
San Francisco, CA 94107-1317

The State of California or its officers or agents shall not be responsible for the accuracy or completeness of electronic copies of this plan sheet.

Caltrans now has a web site! To get to the web site, go to http://www.dot.ca.gov

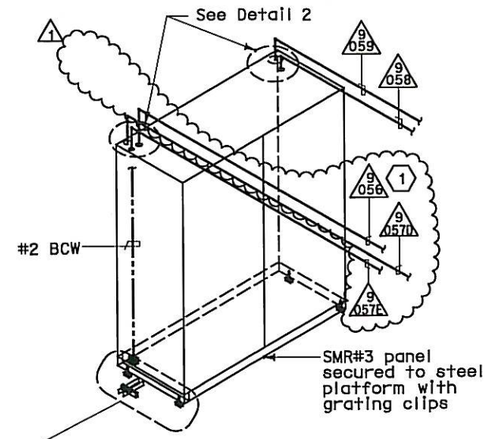

ELEVATION - DETAIL 1
STRONG MOTION RECORDER #3

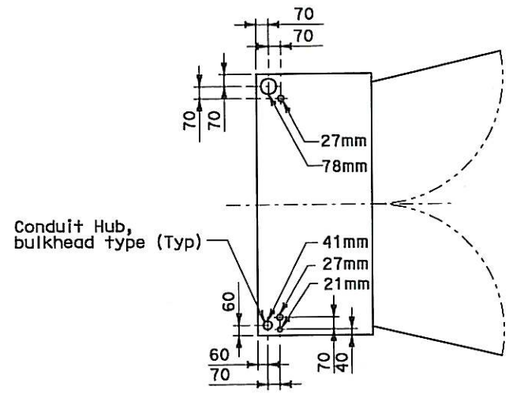

PLAN - DETAIL 2
STRONG MOTION RECORDER #3

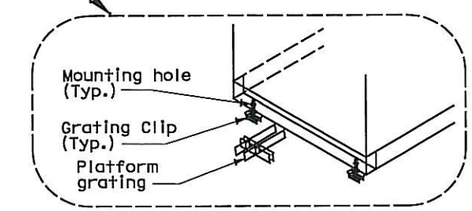

SHEET NOTES:

(1) Install #2 Bare copper wire (bonding jumper) in conduit 9/056

NOTES:

1. References:
   - For detail plan drawing, see sheet E-285. 1
2. All conduits and fittings routed at grating shall be PVC coated, rigid galvanized steel.

REGISTERED PROFESSIONAL ENGINEER DAVID H. OTO No. 10699 Exp. 06/30/2013 ELECTRICAL STATE OF CALIFORNIA

FOR REVISION ONLY 1

REQUEST FOR INFORMATION NOT ADDRESSED IN THIS CCO REMAIN IN FORCE					
1	12/21/11	ELECTRICAL CHANGES FOR ELEVATION 53 IMPROVEMENTS	TW	RG	190
0	12/02/09	TOWER UTILITY PANELS	TW	RG FW	70
MARK	DATE	DESCRIPTIONS	BY	CH'D	CCO#
		REVISIONS			

CONTRACT CHANGE ORDER NO. 190
SHEET 7 OF 37

DETAILS
TOWER AND SUSPENSION CABLE
TOWER POWER AND LIGHTING
NO SCALE

E-264E

DATE	REVISED BY	DATE REVISED

CALCULATED/DESIGNED BY
CHECKED BY

DESIGN OVERSIGHT
BEHZAD GOLEMOHAMMADI

STATE OF CALIFORNIA - DEPARTMENT OF TRANSPORTATION
Caltrans

THIS PLAN ACCURATE FOR ELECTRICAL WORK ONLY.

ALL DIMENSIONS ARE IN MILLIMETERS UNLESS OTHERWISE SHOWN.

FOR REDUCED PLANS ORIGINAL SCALE IS IN MILLIMETERS 0 20 40 60 80

DGN FILE =>04-0120f1_0271S04R01.dgn
USERNAME =>llorico

CU 04251

EA 0120F1

LAST REVISION 12-21-11
DATE PLOTTED => 20-DEC-2011
TIME PLOTTED => 17:12

DIST	COUNTY	ROUTE	KILOMETER POST TOTAL PROJECT	SHEET No	TOTAL SHEETS
04	SF	80	13.2/13.9	271 S6R2	1204

REGISTERED ELECTRICAL ENGINEER DATE

PLANS APPROVAL DATE

REGISTERED PROFESSIONAL ENGINEER FADI WALIEDDINE No. 11465 Exp. 12/31/2009 ELECTRICAL STATE OF CALIFORNIA

PB AMERICAS, Inc.
A Parsons Brinckerhoff Company
303 Second St., Suite 700N
San Francisco, CA 94107-1317

The State of California or its officers or agents shall not be responsible for the accuracy or completeness of electronic copies of this plan sheet.

Caltrans now has a web site! To get to the web site, go to http://www.dot.ca.gov

Metric

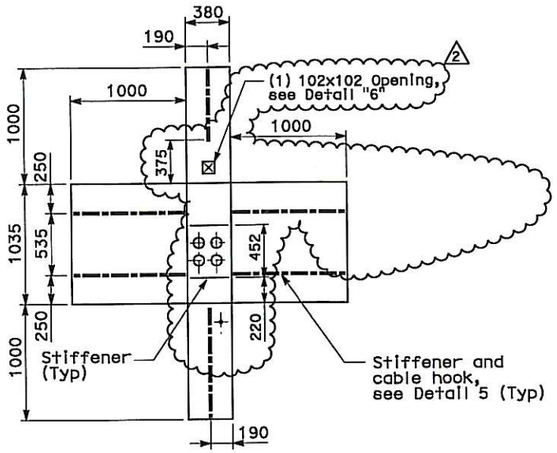

DETAIL 1
PULL BOX A - EXPLODED PLAN VIEW FROM THE INSIDE (1)

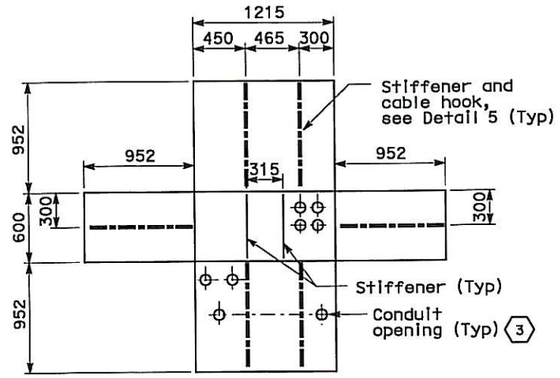

DETAIL 2
PULL BOX B - EXPLODED PLAN VIEW FROM THE INSIDE (1)

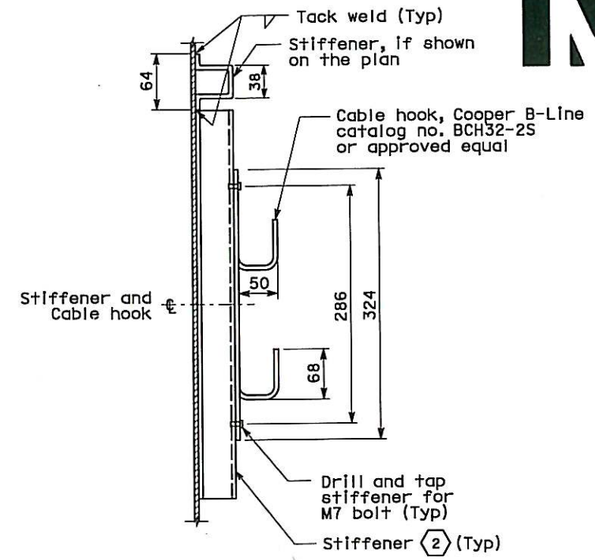

DETAIL 5
STIFFENER AND CABLE HOOK ELEVATION VIEW

SHEET NOTES

(1) Furnish and install stiffeners and cable hooks around the inside walls of pull box. Provide minimal distance between pull box edge and stiffener.

(2) The specified location and quantity of stiffeners represents only the recommended location for attaching the cable hooks. Stiffeners with cable hooks shall be able to withstand a minimum total weight of 60 kg. Additional stiffeners may be installed per the fabricator's discretion to maintain the integrity of the box based on the form and shape.

(3) For actual location of conduit openings, see sheet E-264A.

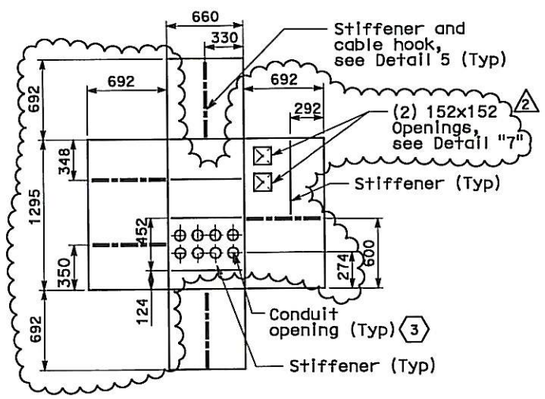

DETAIL 3
PULL BOX C - EXPLODED PLAN VIEW FROM THE INSIDE (1)

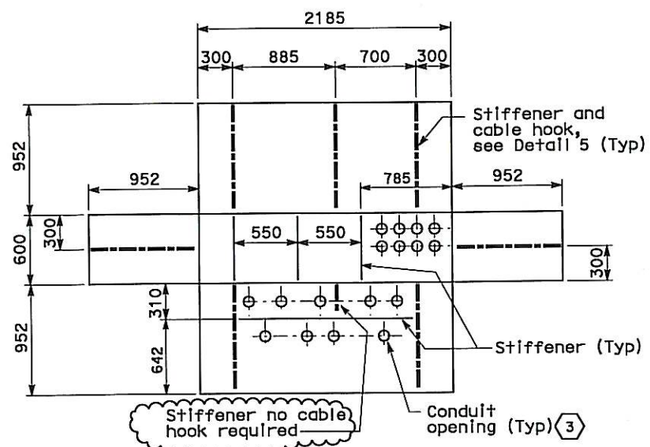

DETAIL 4
PULL BOX D - EXPLODED PLAN VIEW FROM THE INSIDE (1)

NOTES:

1. References:
   - For plan and additional notes, see sheet E-264A.
   - For pull box plan and elevation view, see sheet E-264H.

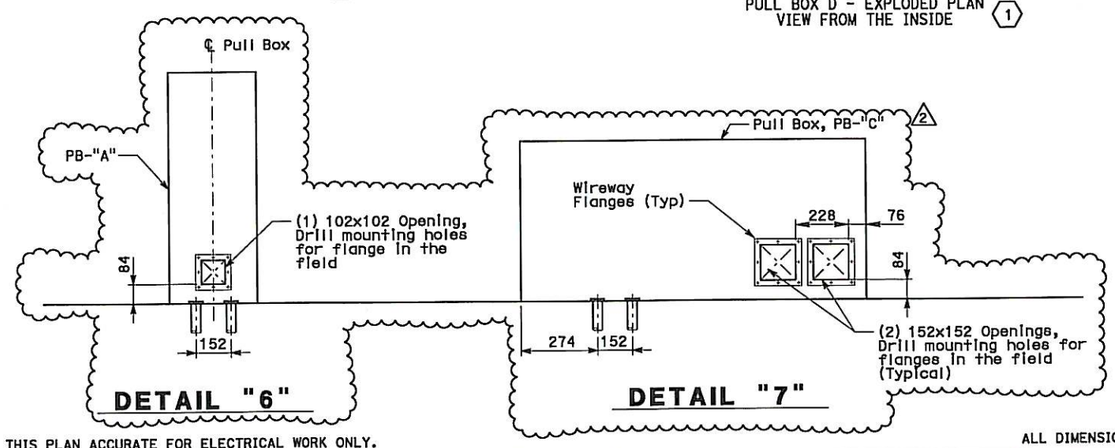

DETAIL "6" **DETAIL "7"**

REGISTERED PROFESSIONAL ENGINEER DAVID H. OTO No. 10699 Exp. 06/30/2013 ELECTRICAL STATE OF CALIFORNIA

FOR REVISION ONLY (1)(2)

REQUEST FOR INFORMATION NOT ADDRESSED IN THIS CCO REMAIN IN FORCE					
(2)	01/25/12	ELECTRICAL CHANGES FOR ELEVATION 53 IMPROVEMENTS	TW EC	RG RM	190
(1)	11/07/11	PLATFORM MODIFICATIONS	RM	DO CK	206
(0)	09/18/09	TOWER UTILITY PANELS	RSB	RG FW	70
MARK	DATE	DESCRIPTIONS	BY	CH'D	CCO#
		REVISIONS			

CONTRACT CHANGE ORDER NO. 190
SHEET 8 OF 37

DETAILS
TOWER AND SUSPENSION CABLE
TOWER POWER AND LIGHTING
NO SCALE

E-264G

THIS PLAN ACCURATE FOR ELECTRICAL WORK ONLY.

ALL DIMENSIONS ARE IN MILLIMETERS UNLESS OTHERWISE SHOWN.

FOR REDUCED PLANS ORIGINAL SCALE IS IN MILLIMETERS 0 20 40 60 80

DGN FILE =>04-0120F1_0271S06R02.dgn
USERNAME =>llorico

CU 04251 | EA 0120F1

LAST REVISION 12-21-11 | DATE PLOTTED => 24-JAN-2012 | TIME PLOTTED => 16:09

STATE OF CALIFORNIA - DEPARTMENT OF TRANSPORTATION

DESIGN OVERSIGHT BEHZAD GOLEMOHAMMADI

CALCULATED/DESIGNED BY | CHECKED BY

DATE | REVISED BY | DATE REVISED

DIST	COUNTY	ROUTE	KILOMETER POST TOTAL PROJECT	SHEET No	TOTAL SHEETS
04	SF	80	13.2/13.9	271 STR2	1204

REGISTERED ELECTRICAL ENGINEER 9-18-09 DATE

PLANS APPROVAL DATE

REGISTERED PROFESSIONAL ENGINEER FADI WALIEDDINE No. 11465 Exp. 12/31/2009 ELECTRICAL STATE OF CALIFORNIA

PB AMERICAS, Inc.
A Parsons Brinckerhoff Company
303 Second St., Suite 700N
San Francisco, CA 94107-1317

The State of California or its officers or agents shall not be responsible for the accuracy or completeness of electronic copies of this plan sheet.

Caltrans now has a web site! To get to the web site, go to http://www.dot.ca.gov

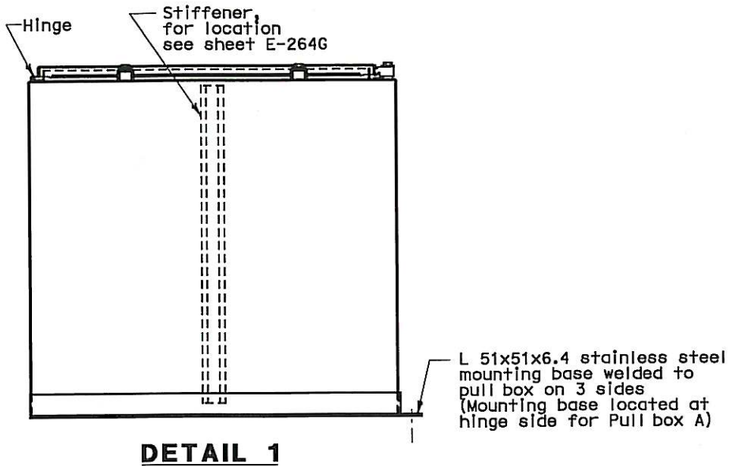

DETAIL 1
TYPICAL PULL BOX - SIDE ELEVATION VIEW (1)(2)
TYPICAL FOR PULL BOX A

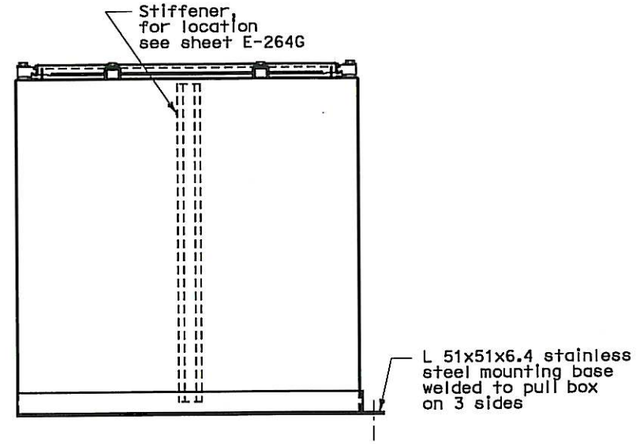

DETAIL 2
PULL BOX C, B AND D - SIDE ELEVATION VIEW (2)

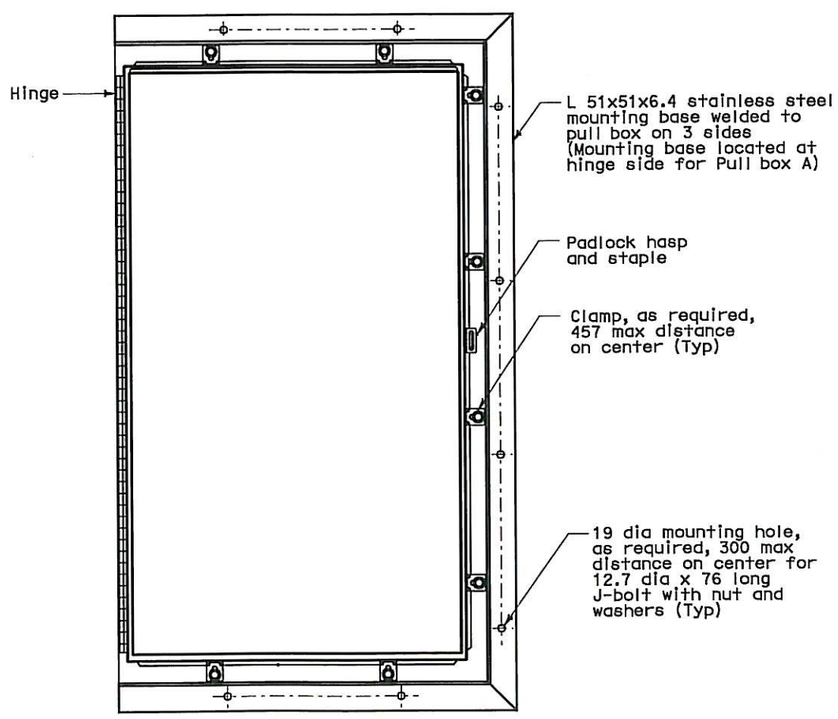

DETAIL 1A
TYPICAL PULL BOX - TOP PLAN VIEW (1)(2)
TYPICAL FOR PULL BOX A AND C (2)

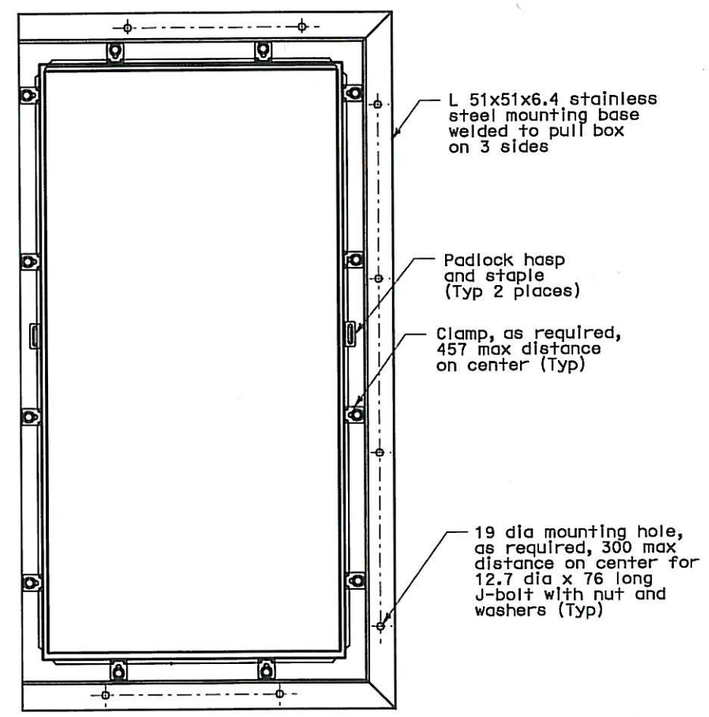

DETAIL 2A
PULL BOX C, B AND D - TOP PLAN VIEW (2)

SHEET NOTES

(1) Furnish and install two gas charged lift supports to pull box door, gas lift support shall be sized for the individual door weight.

(2) Pull Box shall be fabricated of (316L) stainless steel, (12) gage (except the bottom plate which shall be 10 gage), Nema type 4X in accordance with the applicable industry standard.

NOTES:

1. References:
   - For plan and additional notes, see sheet E-264A.
   - For pull box exploded view, see sheet E-264G.

REGISTERED PROFESSIONAL ENGINEER DAVID H. OTO No. 10699 Exp. 06/30/2013 ELECTRICAL STATE OF CALIFORNIA

FOR REVISION ONLY (1)(2)

REQUEST FOR INFORMATION NOT ADDRESSED IN THIS CCO REMAIN IN FORCE					
2	12/21/11	ELECTRICAL CHANGES FOR ELEVATION 53 IMPROVEMENTS	TW	RM CK	190
1	11/07/11	PLATFORM MODIFICATIONS	RM	DO CK	206
0	09/18/09	TOWER UTILITY PANELS	RB	RG FW	70
MARK	DATE	DESCRIPTIONS	BY	CH'D	CCO#
		REVISIONS			

CONTRACT CHANGE ORDER NO. 190
SHEET 9 OF 37

DETAILS
TOWER AND SUSPENSION CABLE
TOWER POWER AND LIGHTING
NO SCALE

E-264H

THIS PLAN ACCURATE FOR ELECTRICAL WORK ONLY.

ALL DIMENSIONS ARE IN MILLIMETERS UNLESS OTHERWISE SHOWN.

FOR REDUCED PLANS ORIGINAL SCALE IS IN MILLIMETERS 0 20 40 60 80

DGN FILE =>04-0120F1_0271S07R02.dgn
USERNAME =>llorico

CU 04251 | EA 0120F1

STATE OF CALIFORNIA - DEPARTMENT OF TRANSPORTATION
Caltrans

DESIGN OVERSIGHT: BEHZAD GOLEMOHAMMADI

CALCULATED/DESIGNED BY | CHECKED BY

DATE | REVISED BY | DATE REVISED

LAST REVISION 12-21-11 | DATE PLOTTED => 20-DEC-2011 | TIME PLOTTED => 17:12

DIST	COUNTY	ROUTE	KILOMETER POST TOTAL PROJECT	SHEET No	TOTAL SHEETS
04	SF	80	13.2/13.9	271 S8	1204

REGISTERED ELECTRICAL ENGINEER 12/21/11 DATE

PLANS APPROVAL DATE

REGISTERED PROFESSIONAL ENGINEER DAVID H. OTO No. 10699 Exp. 06/30/2013 ELECTRICAL STATE OF CALIFORNIA

PB AMERICAS, Inc.
A Parsons Brinckerhoff Company
303 Second St., Suite 700N
San Francisco, CA 94107-1317

The State of California or its officers or agents shall not be responsible for the accuracy or completeness of electronic copies of this plan sheet.

Caltrans now has a web site! To get to the web site, go to http://www.dot.ca.gov

Caltrans Metric

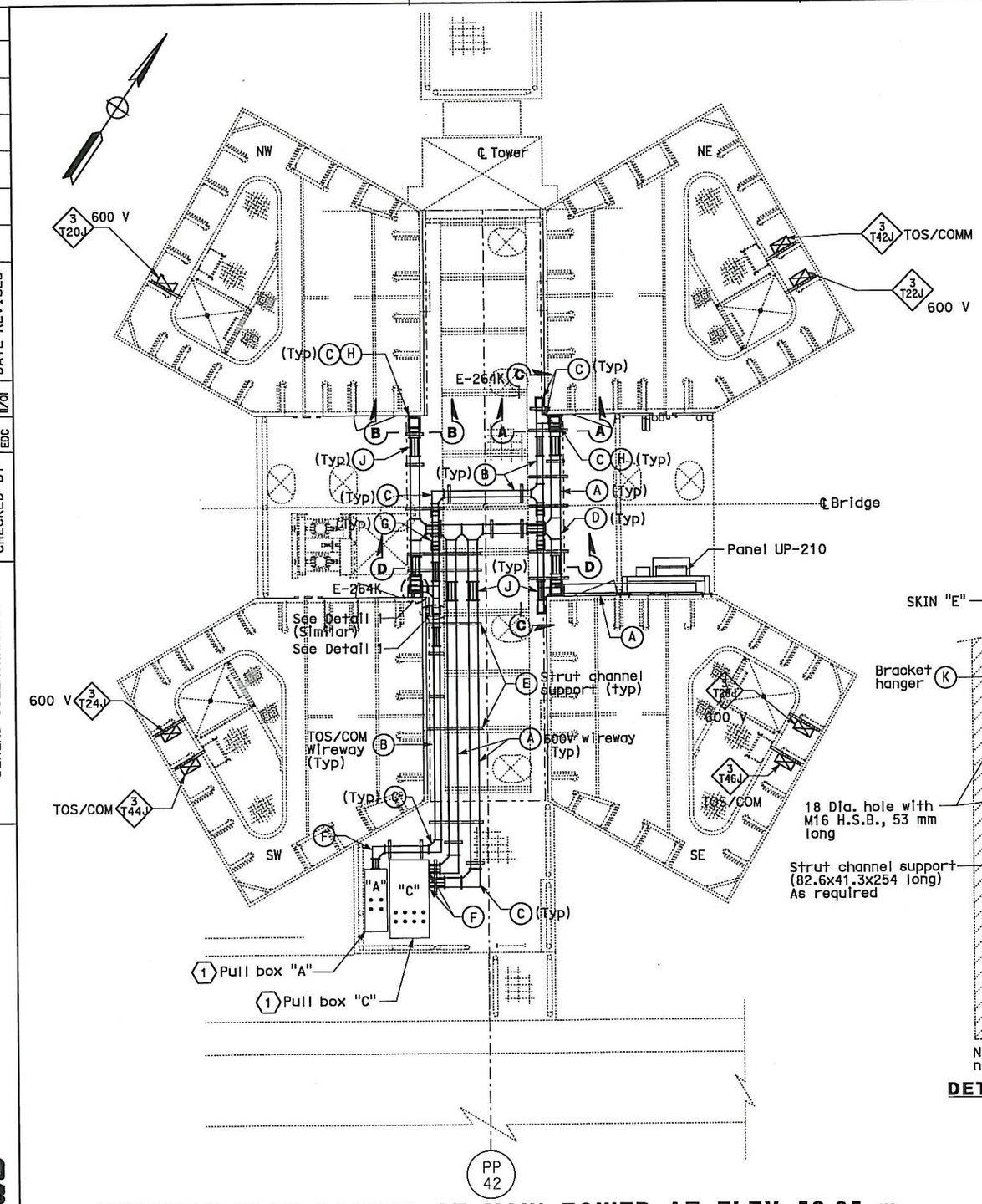

WIREWAY PLAN LAYOUT AT MAIN TOWER AT ELEV 53.85 m AND WALKWAY/ACCESS PLATFORM TO "E" LINE GIRDER

SCALE 1:40

MATERIAL LIST

Item No.	Description
A	Wireway straight section 152x152mm with cover
B	Wireway straight section 102x102mm with cover
C	Wireway 90 Degree Elbow
D	Wireway Tee Fitting
E	Strut Channel Support
F	Panel adapter for wireway
G	45 Degree Fitting
H	Wireway Closing Plate
J	Wireway Flexible Fitting, Hoffman F-44WFFSS and F-66WFFSS or equal
K	Bracket hanger, Hoffman F44HBSS and F66HBSS or equal

SHEET NOTES:

1. For Pull Box "A" and "C" see Details 2 and 3 on sheet E-264A.
2. Maintain minimum clearance from tower skin plate at SW shaft only for Mechanical piping to Booster Pump.

NOTES:

1. Wireway shall be Type 316SS stainless steel NEMA 4X with cover and bracket hanger for mounting.

REQUEST FOR INFORMATION NOT ADDRESSED IN THIS CCO REMAIN IN FORCE

MARK	DATE	DESCRIPTIONS	BY	CH'D	CCO#
0	01/25/12	ELECTRICAL CHANGES FOR ELEVATION 53 IMPROVEMENTS	TW	RG	190

REVISIONS

CONTRACT CHANGE ORDER NO. 190
SHEET 10 OF 37

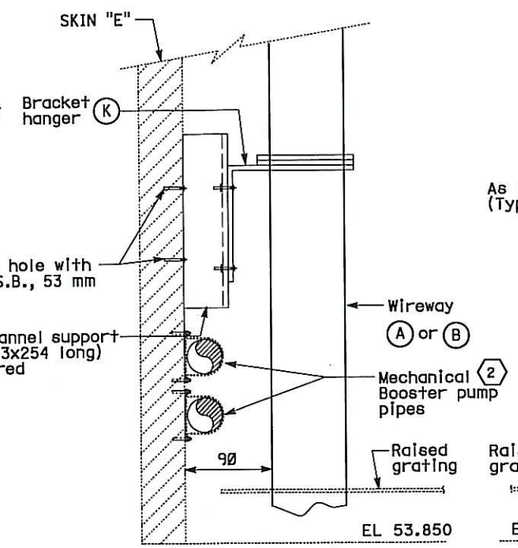

Note: Electrical Equipment not shown for clarity.

DETAIL 1 - ELEVATION
SKIN "E" SW
NOT TO SCALE
(Similar to Skin "A" SW)

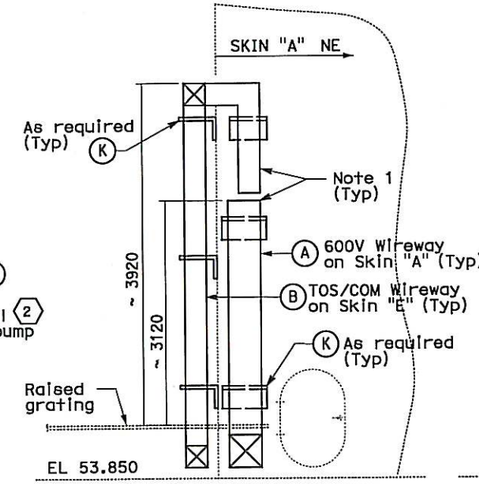

Note: Electrical Equipment not shown for clarity.

SECTION A-A
NOT TO SCALE
(TYPICAL FOR SW
(SE: OPPOSITE HAND)

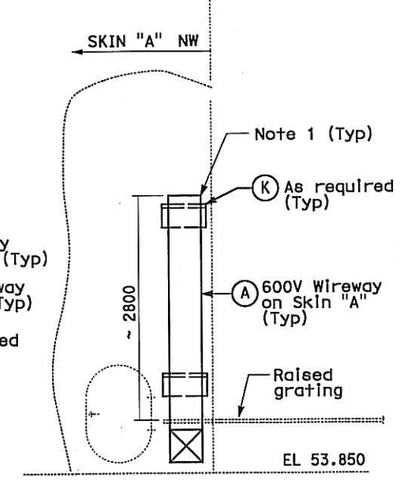

Note: Electrical Equipment not shown for clarity.

SECTION B-B
NOT TO SCALE

DETAILS
TOWER AND SUSPENSION CABLE TOWER POWER AND LIGHTING

SCALE AS NOTED

E-264J

REVISED BY	DATE	DATE REVISED
FK	10/01	11/01

CALCULATED/DESIGNED BY FK
CHECKED BY EDC

DESIGN OVERSIGHT
BEHZAD GOLEMOHAMMADI

STATE OF CALIFORNIA - DEPARTMENT OF TRANSPORTATION
Caltrans

LAST REVISION 12-21-11
DATE PLOTTED => 24-JAN-2012
TIME PLOTTED => 16:09

THIS PLAN ACCURATE FOR ELECTRICAL WORK ONLY.

ALL DIMENSIONS ARE IN MILLIMETERS UNLESS OTHERWISE SHOWN.

FOR REDUCED PLANS ORIGINAL SCALE IS IN MILLIMETERS 0 20 40 60 80

DGN FILE =>04-0120f1_0271S08.dgn
USERNAME =>llorico

CU 04251 EA 0120F1

DIST	COUNTY	ROUTE	KILOMETER POST TOTAL PROJECT	SHEET No	TOTAL SHEETS
04	SF	80	13.2/13.9	271 S9	1204

REGISTERED ELECTRICAL ENGINEER 12/21/11 DATE

PLANS APPROVAL DATE

REGISTERED PROFESSIONAL ENGINEER DAVID H. OTO No. 10699 Exp. 06/30/2013 STATE OF CALIFORNIA

PB AMERICAS, inc.
A Parsons Brinckerhoff Company
303 Second St., Suite 700N
San Francisco, CA 94107-1317

The State of California or its officers or agents shall not be responsible for the accuracy or completeness of electronic copies of this plan sheet.

Caltrans now has a web site! To get to the web site, go to http://www.dot.ca.gov

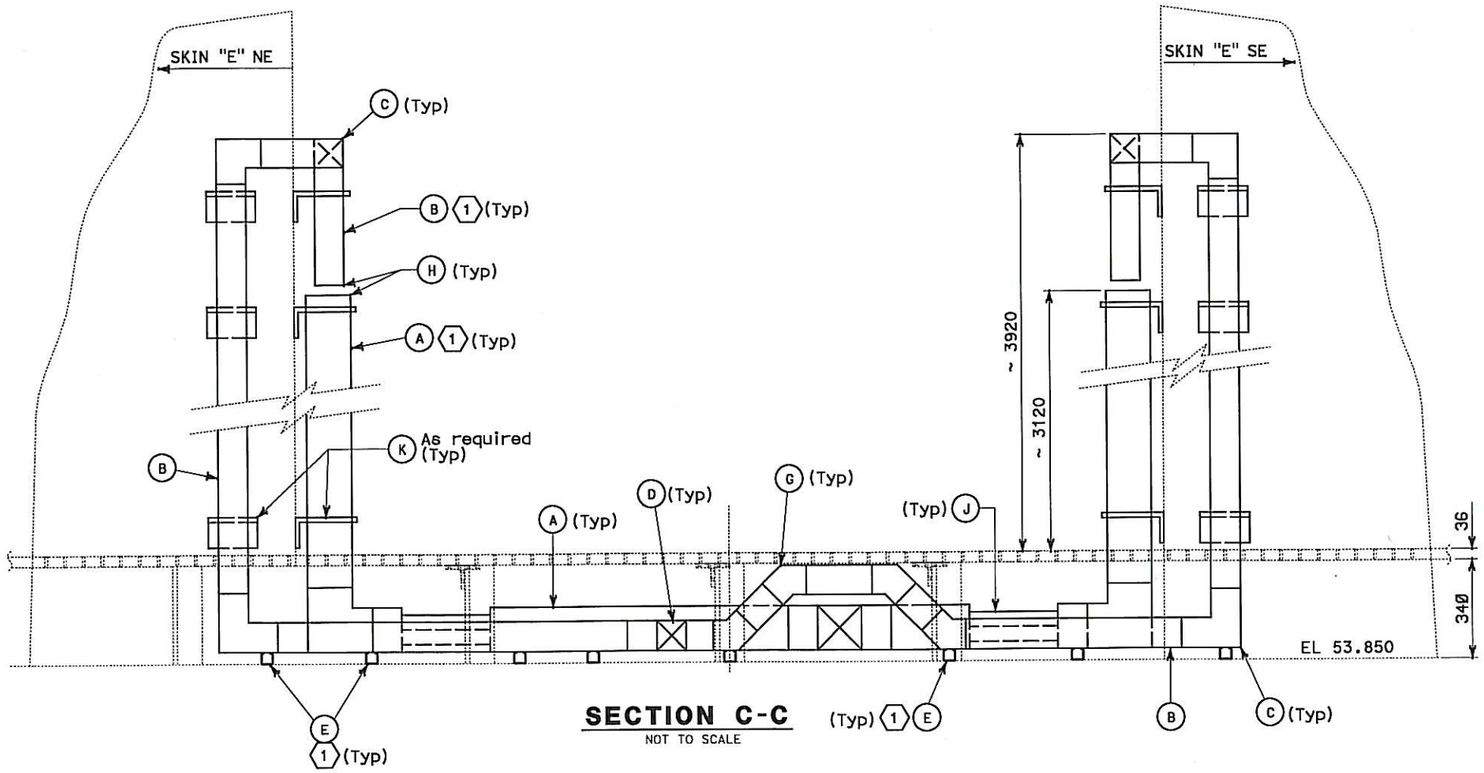

SECTION C-C
NOT TO SCALE

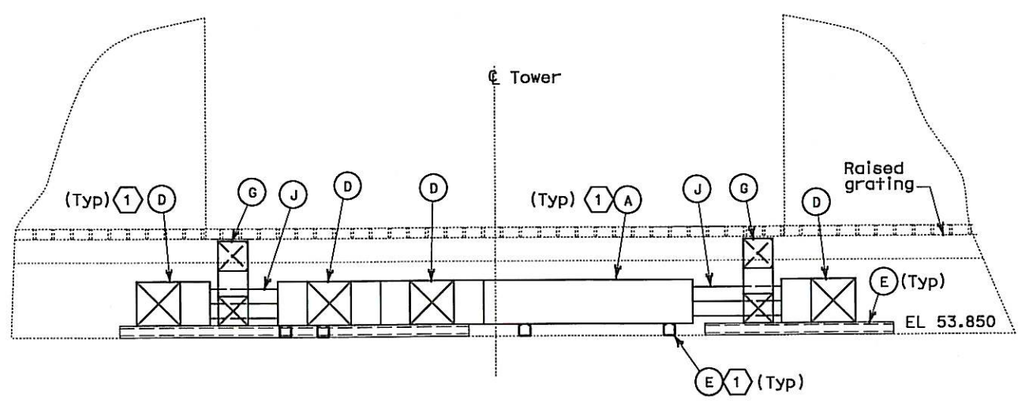

SECTION D-D
NOT TO SCALE

SHEET NOTES:

1 For Material List see Sheet E-264J.

SHEET NOTES:

1. For Sections C-C & D-D see plan sheet E-264J.

REQUEST FOR INFORMATION NOT ADDRESSED IN THIS CCO REMAIN IN FORCE					
0	12/21/11	ELECTRICAL CHANGES FOR ELEVATION 53 IMPROVEMENTS	TW	RG	190
MARK	DATE	DESCRIPTIONS	BY	CH'D	CCO#
		REVISIONS			

CONTRACT CHANGE ORDER NO. 190
SHEET 11 OF 37

DETAILS
TOWER AND SUSPENSION CABLE
TOWER POWER AND LIGHTING
SCALE AS NOTED

E-264K

REVISED BY	DATE REVISED

DATE XX/10	XX/10
XX	XX

CALCULATED/DESIGNED BY — CHECKED BY

DESIGN OVERSIGHT — BEHZAD GOLEMOHAMMADI

STATE OF CALIFORNIA - DEPARTMENT OF TRANSPORTATION

Caltrans

LAST REVISION 12-21-11 — DATE PLOTTED => 20-DEC-2011 TIME PLOTTED => 17:12

THIS PLAN ACCURATE FOR ELECTRICAL WORK ONLY.

FOR REDUCED PLANS ORIGINAL SCALE IS IN MILLIMETERS 0 20 40 60 80

DGN FILE =>04-0120f1_0271S09.dgn
USERNAME =>llorico

CU 04251 | EA 0120F1

DIST	COUNTY	ROUTE	KILOMETER POST TOTAL PROJECT	SHEET No	TOTAL SHEETS
04	SF		13.2/13.9	271 S10	1204

REGISTERED ELECTRICAL ENGINEER 12/21/11 DATE

PLANS APPROVAL DATE

REGISTERED PROFESSIONAL ENGINEER DAVID H. OTO No. 10699 Exp. 06/30/2013 ELECTRICAL STATE OF CALIFORNIA

PB AMERICAS, Inc.
A Parsons Brinckerhoff Company
303 Second St., Suite 700N
San Francisco, CA 94107-1317

The State of California or its officers or agents shall not be responsible for the accuracy or completeness of electronic copies of this plan sheet.

Caltrans now has a web site! To get to the web site, go to http://www.dot.ca.gov

Caltrans Metric

REQUEST FOR INFORMATION NOT ADDRESSED IN THIS CCO REMAIN IN FORCE					
0	01/25/12	ELECTRICAL CHANGES FOR ELEVATION 53 IMPROVEMENTS	TW	RG	190
MARK	DATE	DESCRIPTIONS	BY	CH'D	CCO#
		REVISIONS			

CONTRACT CHANGE ORDER NO. 190
SHEET 12 OF 37

SHEET NOTES:

1. See sheet E-285B for penetration doubler plate and schedule and details.
2. For conduits and grounding route throught to penetrations at these elevation see E-111A, E-264, E-264B, E-281, E-293 and E-366.
3. Liquidtight flexible metal conduit May be used where rigid conduit is not feasible to install due to the available space to bend rigid conduit.

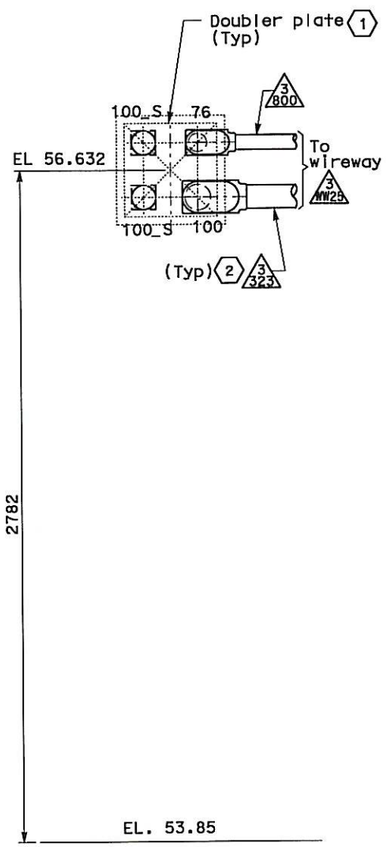

DETAIL-1
NW Penetrations

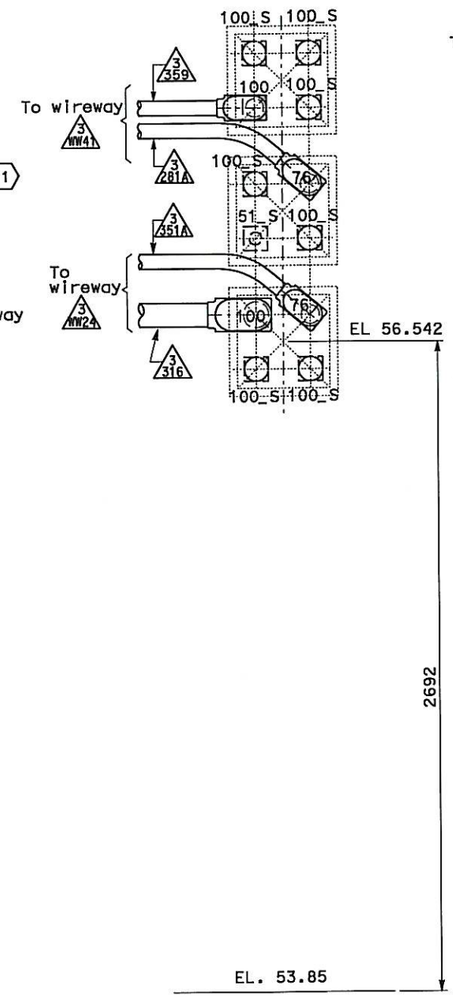

DETAIL-2
SW Penetrations

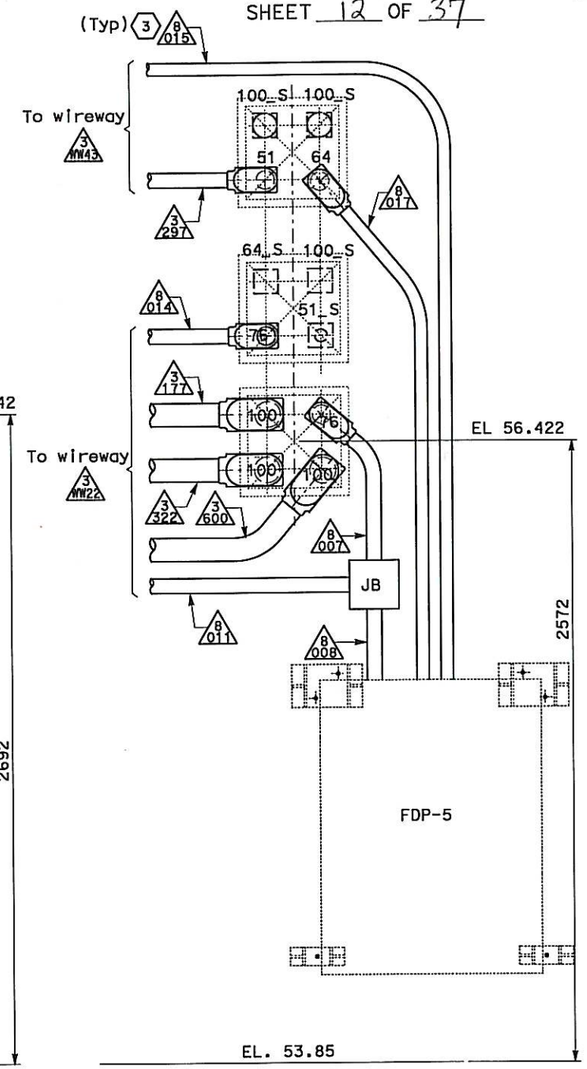

DETAIL-3
NE Penetrations

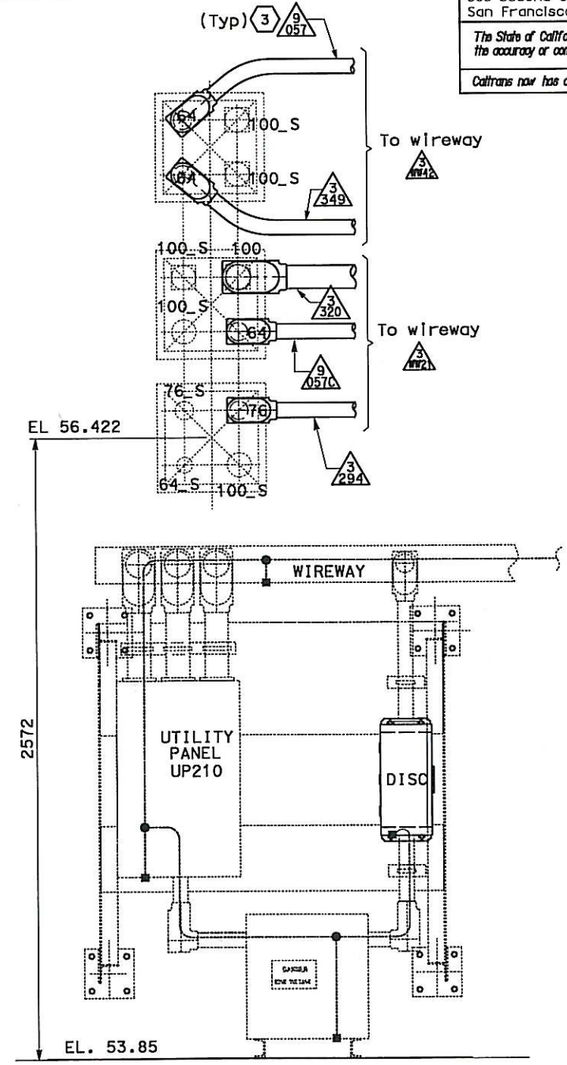

DETAIL-4
SE Penetrations

DETAILS
TOWER AND SUSPENSION CABLE
TOWER POWER AND LIGHTING
SCALE: AS NOTED

E-264L

STATE OF CALIFORNIA - DEPARTMENT OF TRANSPORTATION
Caltrans

DESIGN OVERSIGHT: BEHZAD GOLEMOHAMMADI

CALCULATED/DESIGNED BY | CHECKED BY | XX | DATE XX/10 | XX/10 | REVISED BY | DATE REVISED

THIS PLAN ACCURATE FOR ELECTRICAL WORK ONLY.

ALL DIMENSIONS ARE IN MILLIMETERS UNLESS OTHERWISE SHOWN

FOR REDUCED PLANS ORIGINAL SCALE IS IN MILLIMETERS 0 20 40 60 80

DGN FILE =>04-0120f1_0271S10.dgn
USERNAME =>llorico

CU 04251 | EA 0120F1

LAST REVISION 12-21-11 | DATE PLOTTED => 24-JAN-2012 | TIME PLOTTED => 16:09

REQUEST FOR INFORMATION NOT ADDRESSED IN THIS CCO REMAIN IN FORCE					
4	12/21/11	ELECTRICAL CHANGES FOR ELEVATION 53 IMPROVEMENTS	TW	RG	190
3	09/12/11	TOS MODIFICATIONS	RG RR	ML	81
2	12/11/09	TOWER UTILITY PANELS	TW	RG FW	70
1	02/19/08	ELECTRICAL MODIFICATIONS	MP EL	RR	42
MARK	DATE	DESCRIPTIONS	BY	CH'D	CCO#
		REVISIONS			

CONTRACT CHANGE ORDER NO. 190
SHEET 13 OF 37

DIST	COUNTY	ROUTE	KILOMETER POST TOTAL PROJECT	SHEET No	TOTAL SHEETS
04	SF	80	13.2/13.9	284 R4	1204

REGISTERED CIVIL ENGINEER 12/19/02 DATE

12-6-04
PLANS APPROVAL DATE

REGISTERED PROFESSIONAL ENGINEER Michael Dahlin No. 47186 Exp. 12/31/05 CIVIL STATE OF CALIFORNIA

PB POWER, Inc.
A Parsons Brinckerhoff Company
303 Second St., Suite 700N
San Francisco, CA 94107-1317

The State of California or its officers or agents shall not be responsible for the accuracy or completeness of electronic copies of this plan sheet.

Caltrans now has a web site! To get to the web site, go to http://www.dot.ca.gov

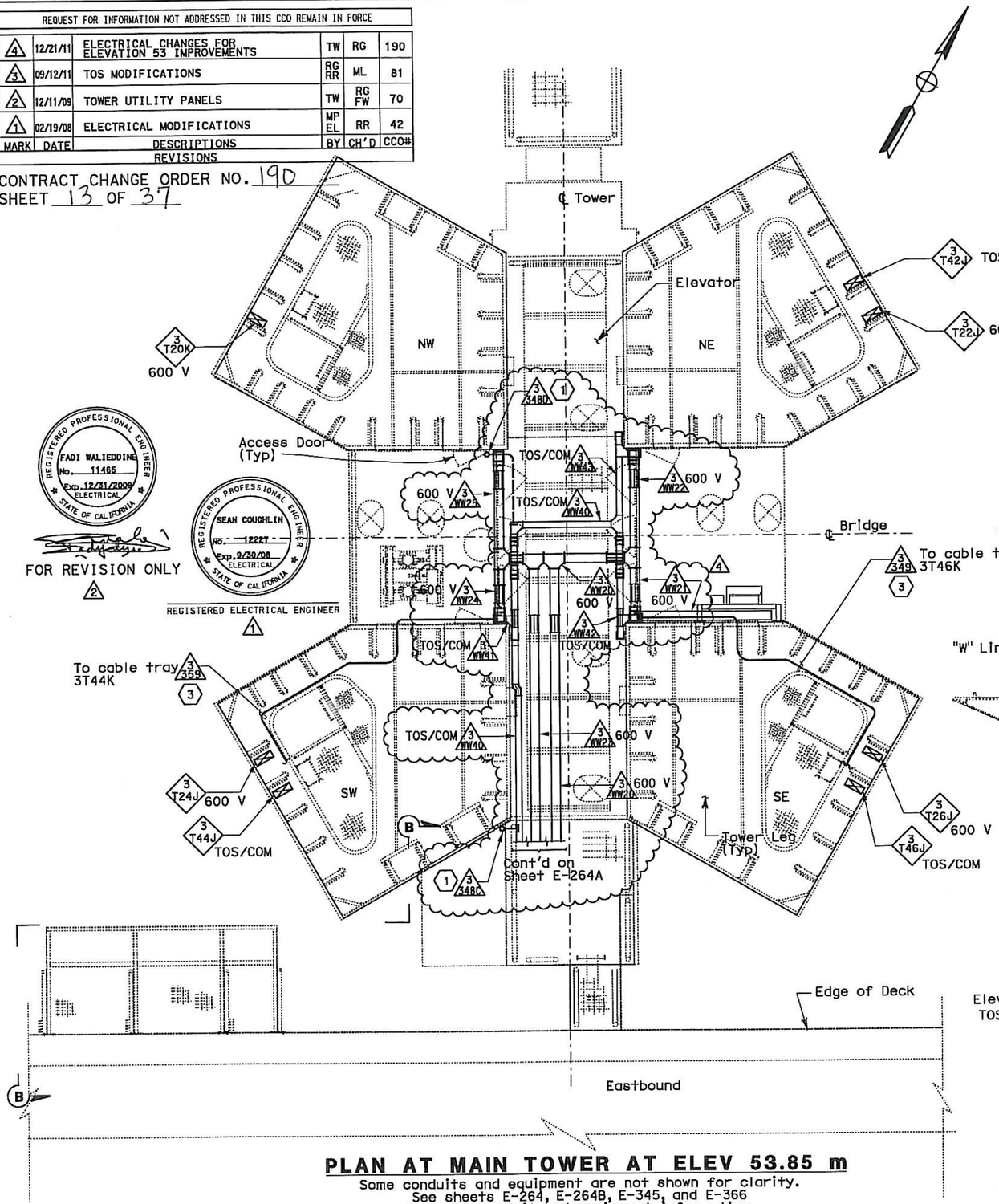

REGISTERED PROFESSIONAL ENGINEER FADI WALIEDDINE No. 11465 Exp. 12/31/2009 ELECTRICAL STATE OF CALIFORNIA

FOR REVISION ONLY 2

REGISTERED PROFESSIONAL ENGINEER SEAN COUGHLIN No. 12227 Exp. 9/30/08 ELECTRICAL STATE OF CALIFORNIA

REGISTERED ELECTRICAL ENGINEER 1

PLAN AT MAIN TOWER AT ELEV 53.85 m

Some conduits and equipment are not shown for clarity.
See sheets E-264, E-264B, E-345, and E-366
for more conduit and equipment information.

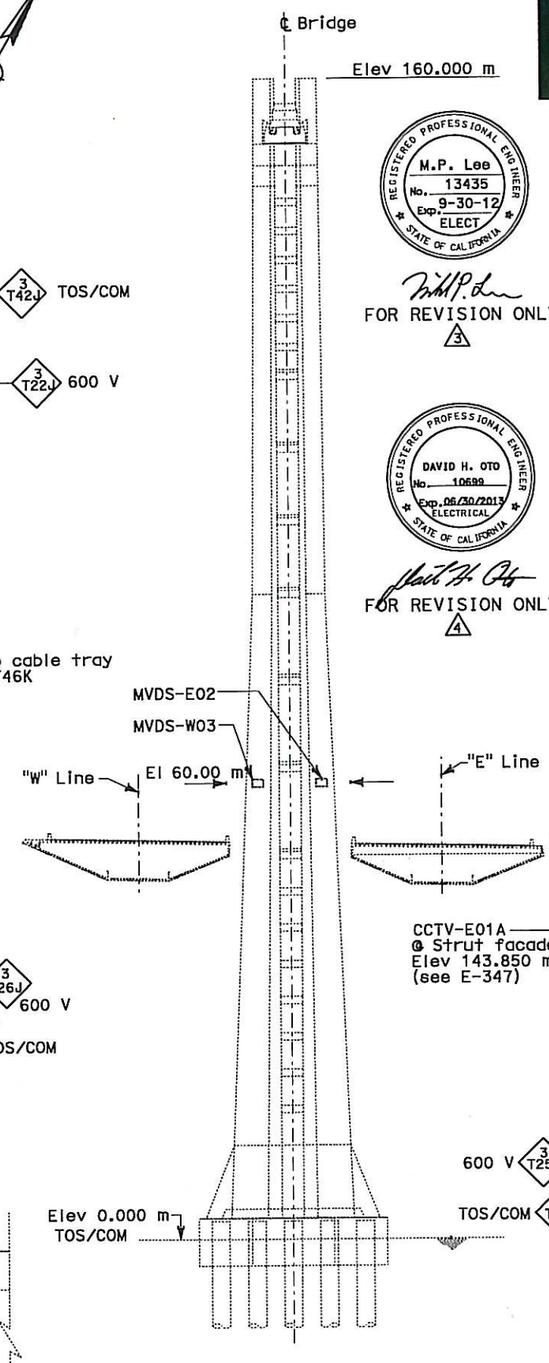

REGISTERED PROFESSIONAL ENGINEER M.P. Lee No. 13435 Exp. 9-30-12 ELECT STATE OF CALIFORNIA

FOR REVISION ONLY 3

REGISTERED PROFESSIONAL ENGINEER DAVID H. OTO No. 10699 Exp. 06/30/2013 ELECTRICAL STATE OF CALIFORNIA

FOR REVISION ONLY 4

ELEVATION

SHEET NOTES:

1. For conduit routing to MVDS units. See elevation on this sheet and sheet E-345.
2. Deleted
3. Conduits are at El 56.422 and connected to 600 V cable tray at this elevation inside respective tower shaft.

NOTES:

1. References:
   - For conduit and cable tray schedules, see sheets starting at E-401.
2. For Section B-B, see sheet E-264A.
3. For wireway details, see sheet E-264J.

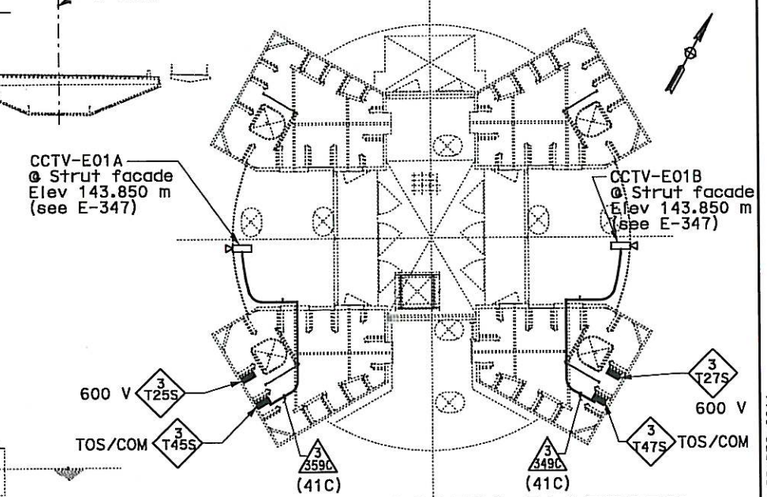

PLAN AT ACCESS PLATFORM AT ELEV 143.850 m

DETAILS
TOWER AND SUSPENSION CABLE TRAFFIC OPERATIONS SYSTEM CONDUIT
NO SCALE

E-281

THIS PLAN ACCURATE FOR ELECTRICAL WORK ONLY.

ALL DIMENSIONS IN MILLIMETERS UNLESS OTHERWISE SHOWN

FOR REDUCED PLANS ORIGINAL SCALE IS IN MILLIMETERS 0 20 40 60 80

DGN FILE =>04-0120f1_0284R04.dgn
USERNAME =>llorico

CU 04251 | EA 0120F1

DATE PLOTTED => 20-DEC-2011
TIME PLOTTED => 17:12

LAST REVISION 12-21-11

STATE OF CALIFORNIA - DEPARTMENT OF TRANSPORTATION
Caltrans

DESIGN OVERSIGHT BEHZAD GOLEMOHAMMADI

CALCULATED/DESIGNED BY MD | DATE 11/01 | REVISED BY
CHECKED BY PBF | 12/01 | DATE REVISED

DIST	COUNTY	ROUTE	KILOMETER POST TOTAL PROJECT	SHEET No	TOTAL SHEETS
04	SF	80	13.2/13.9	288 R3	1204

REGISTERED ELECTRICAL ENGINEER 12/19/02 DATE

12-6-04
PLANS APPROVAL DATE

PB POWER, Inc.
A Parsons Brinckerhoff Company
303 Second St., Suite 700N
San Francisco, CA 94107-1317

The State of California or its officers or agents shall not be responsible for the accuracy or completeness of electronic copies of this plan sheet.

Caltrans now has a web site! To get to the web site, go to http://www.dot.ca.gov

REQUEST FOR INFORMATION NOT ADDRESSED IN THIS CCO REMAIN IN FORCE

MARK	DATE	DESCRIPTIONS	BY	CH'D	CCO#
3	12/21/11	ELECTRICAL CHANGES FOR ELEVATION 53 IMPROVEMENTS	TW EC	RG RM	190
2	12/11/09	TOWER UTILITY PANELS	JS TW	RG FW	70
1	02/19/08	ELECTRICAL MODIFICATIONS	MP EL	RR	42

REVISIONS

CONTRACT CHANGE ORDER NO. 190
SHEET 14 OF 37

FOR REVISION ONLY 1

FOR REVISION ONLY 2

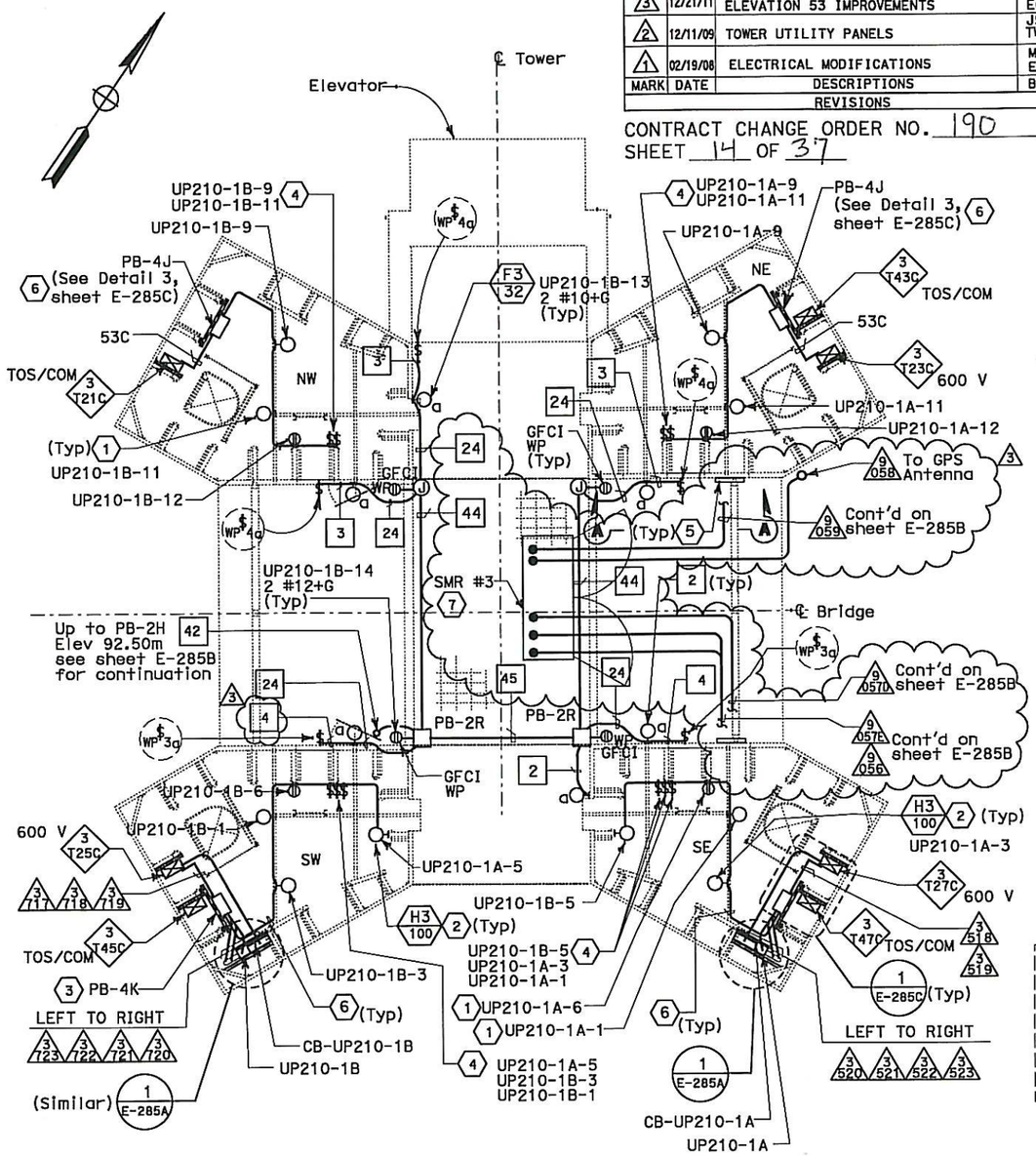

PLAN AT ELEVATION 89.85 m

SCALE: 1:40

FOR REVISION ONLY 3

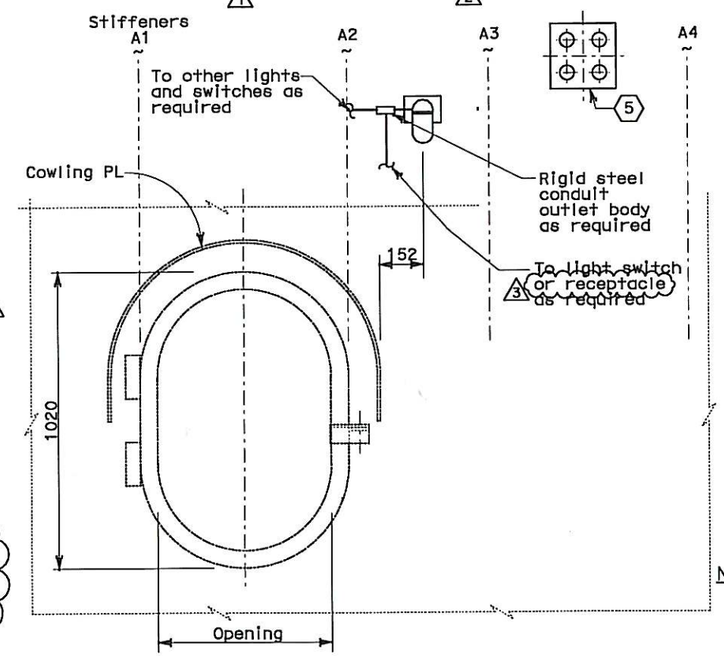

SECTION A-A
ACCESS OPENING DOOR

NO SCALE

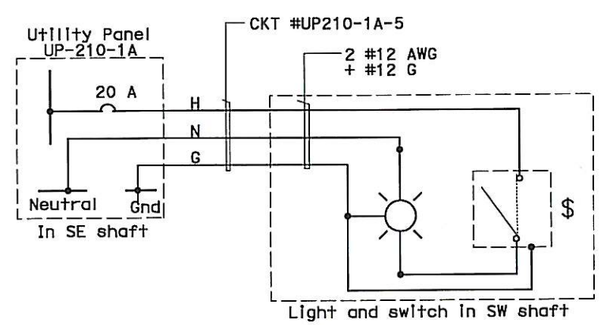

120 V ELECTRICAL EQUIPMENT TASK LIGHTING WIRING DIAGRAM

(Shown for circuit #UP210-1A-5 only, light in SE shaft is similar, but fed from UP-210-1B-5 in the SW shaft)

SHEET NOTES:

1. For tower shaft ladder and platform lighting and power layout, see section B-B on sheet E-284 & E-284A.
2. Light shown mounted under ceiling.
3. For shaft lighting and receptacle distribution box details, see Detail 1, Sheet E-285C.
4. Multiple switches at certain elevations. See sheets E-284 and E-284A and Detail 8 sheet E-268
5. See sheet E-285B for penetration doubler plate schedule and E-264L for details. 3
6. Numbers and sizes of conduits are field route to lights, receptacles and switches. See sheets E-284 and E-284A for conduit information.
7. For SMR #3 details, see sheet E-264E. 3

NOTES:

1. References:
   - For typical conduit installation details, see sheet E-268.
   - For utility panel UP-210-1A and UP-210-1B panel schedules, see sheets E-279 and E-280.
   - For types of pull boxes, splice boxes and enclosures, see sheets E-83 and E-169.
   - For conduit and cable tray schedules, see sheets starting at E-401.
   - For lighting installation details, see sheet E-267.
   - For lighting fixture schedule, see sheet E-273.
2. All conduits and fittings routed exposed at grating shall be rigid galvanized steel, PVC coated.
3. Fixture mounting height elevation shall be 2.125 m above floor/platform elevation UNO.
4. Electrical conduits shall enter the tower shafts between stiffeners A3 and A4 only. For conduit entry details, see Structural Utility drawings.
5. For other related work not shown on this sheet, see Electrical Special Provisions.

DETAILS
TOWER AND SUSPENSION CABLE
TOWER POWER AND LIGHTING

SCALE: AS NOTED

E-285

REVISED BY	DATE REVISED

CALCULATED/ DESIGNED BY	CHECKED BY	DATE 10/01	11/01
FK	EDC		

DESIGN OVERSIGHT
BEHZAD GOLEMOHAMMADI

STATE OF CALIFORNIA - DEPARTMENT OF TRANSPORTATION

THIS PLAN ACCURATE FOR ELECTRICAL WORK ONLY.

ALL DIMENSIONS ARE IN MILLIMETERS UNLESS OTHERWISE SHOWN

FOR REDUCED PLANS ORIGINAL SCALE IS IN MILLIMETERS 0 20 40 60 80

DGN FILE =>04-0120f1_02BBR03.dgn
USERNAME =>llorico

CU 04251

EA 0120F1

LAST REVISION 12-21-11
DATE PLOTTED => 20-DEC-2011
TIME PLOTTED => 17:13

DIST	COUNTY	ROUTE	KILOMETER POST TOTAL PROJECT	SHEET No	TOTAL SHEETS
04	SF	80	13.2/13.9	288 S2R1	1204

REGISTERED ELECTRICAL ENGINEER DATE

PLANS APPROVAL DATE

REGISTERED PROFESSIONAL ENGINEER FADI WALIEDDINE No. 11465 Exp. 12/31/2009 ELECTRICAL STATE OF CALIFORNIA

PB AMERICAS, Inc.
A Parsons Brinckerhoff Company
303 Second St., Suite 700N
San Francisco, CA 94107-1317

The State of California or its officers or agents shall not be responsible for the accuracy or completeness of electronic copies of this plan sheet.

Caltrans now has a web site! To get to the web site, go to http://www.dot.ca.gov

Caltrans Metric

REGISTERED PROFESSIONAL ENGINEER DAVID H. OTO No. 10699 Exp. 06/30/2013 ELECTRICAL STATE OF CALIFORNIA

FOR REVISION ONLY 1

SHEET NOTE:

1. Numbers and sizes of conduits are field route to lights, receptacles and switches. See sheets E-284 and E-284A for conduit information.

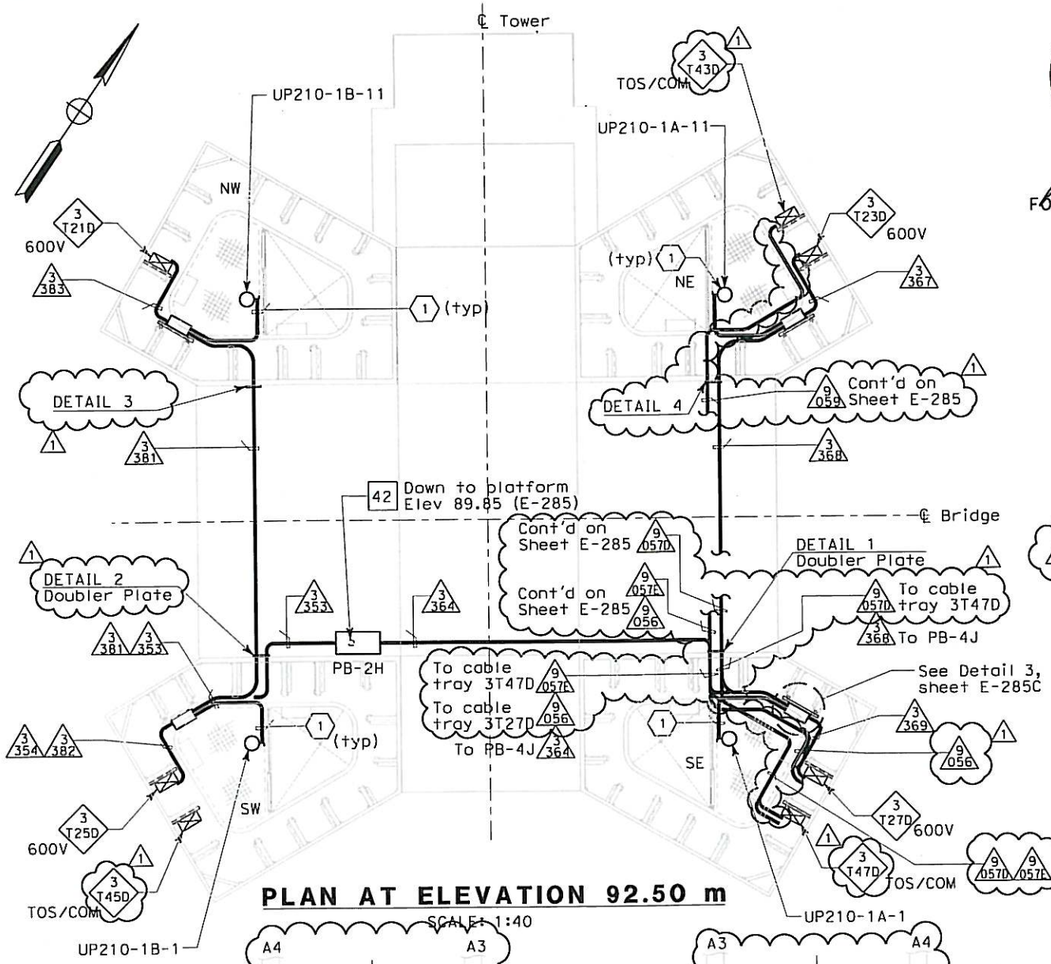

PLAN AT ELEVATION 92.50 m

SCALE: 1:40

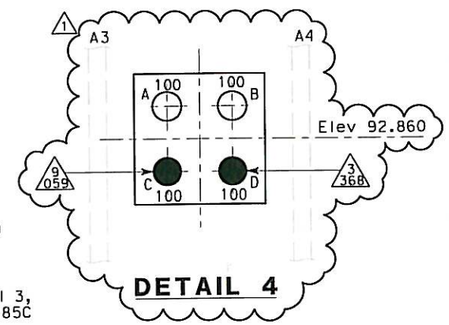

DETAIL 4

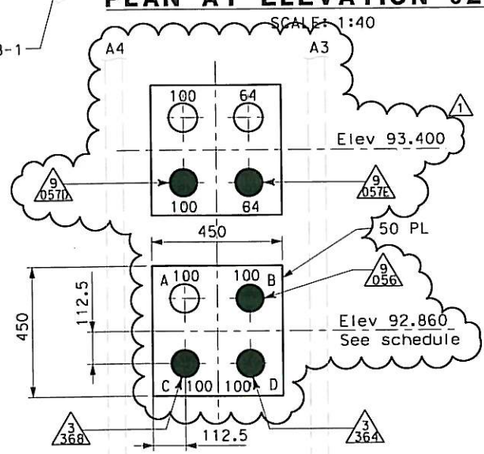

DETAIL 1

TYPICAL DOUBLER PLATE DETAIL

NO SCALE

SE Elev shown, stiffener location shown as viewed from outside shaft, similar for NW shaft & opposite hand for SW & NE shafts

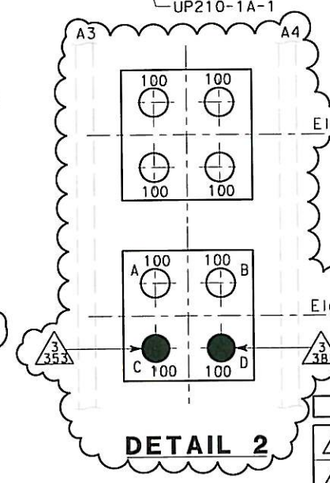

DETAIL 2

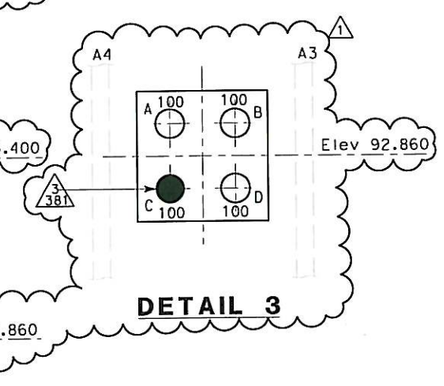

DETAIL 3

TOWER SHAFT SKIN "A" PENETRATION DOUBLER PLATE SCHEDULE

Shaft	Elev (m)	Hole Size (mm) A	B	C	D
NW (W)	11.975	100_S	100_S	51	100_S
NW (W)	16.625	100_S	100_S	100_S	100_S
NW (W)	56.632	100_S	76	100_S	100
NW (W)	92.860	100_S	100_S	100	100_S
NW (W)	129.500	100_S	100_S	100_S	100_S
NW (W)	144.540	100_S	100_S	100_S	100
NE (N)	7.000	100_S	100	100_S	51
NE (N)	11.975	100_S	64	100_S	100_S
NE (N)	13.500	64	100_S	64	78
NE (N)	16.065	100_S	100_S	100_S	100_S
NE (N)	16.625	51	51	100	100
NE (N)	56.422	100	76	100	100
NE (N)	56.977	64_S	100_S	76	51_S
NE (N)	57.622	100_S	100_S	51	64
NE (N)	92.860	100_S	100_S	100	100
NE (N)	129.500	100_S	100_S	100_S	100_S
NE (N)	144.540	100_S	100_S	100	100_S
SE (E)	11.975	100_S	64	64	100
SE (E)	16.625	100_S	100_S	100_S	100_S
SE (E)	56.422	76_S	76	64_S	100_S
SE (E)	56.972	100_S	100	100_S	64
SE (E)	57.622	64	100_S	64	100_S
SE (E)	92.860	100_S	100	100	100
SE (E)	93.400	100_S	64_S	100	64
SE (E)	129.500	100_S	100_S	100_S	100_S
SE (E) *	144.540	64	100_S	64	100_S
SE (E)	144.540	100	100_S	64	76
SW (S)	7.000	100_S	78_S	100_S	100_S
SW (S)	11.975	100_S	100_S	100_S	64
SW (S)	13.500	100_S	78	100_S	100_S
SW (S)	16.625	100_S	51	100_S	100_S
SW (S)	56.542	100	76	100_S	100
SW (S)	57.082	100_S	76	51_S	100_S
SW (S)	57.622	100_S	100_S	100_S	100_S
SW (S)	92.860	100_S	100_S	100	100
SW (S)	93.400	100_S	100_S	100_S	100_S
SW (S)	129.500	100	100_S	100_S	100_S
SW (S) *	144.540	100_S	100_S	100_S	100_S
SW (S)	144.540	100_S	100	76	76

Note: 100_S represents a spare penetration.

* Doubler plates are all between stiffeners A3 & A4, except one plate in each of SE & SW shafts at elevation 144.540, which is between A1 & A2, shown with asterisk in table.

REQUEST FOR INFORMATION NOT ADDRESSED IN THIS CCO REMAIN IN FORCE

MARK	DATE	DESCRIPTIONS	BY	CH'D	CCO#
1	12/21/11	ELECTRICAL CHANGES FOR ELEVATION 53 IMPROVEMENTS	TW EC	RG RG	190
0	12/11/09	TOWER UTILITY PANELS	JS TW	RG FW	70

REVISIONS

CONTRACT CHANGE ORDER NO. 190
SHEET 15 OF 37

ALL DIMENSIONS ARE IN MILLIMETERS UNLESS OTHERWISE SHOWN.

DETAILS
TOWER AND SUSPENSION CABLE TOWER POWER AND LIGHTING

SCALE: AS NOTED

E-285B

DATE	REVISED BY	DATE REVISED
10/01	FK	EDC 11/01

CALCULATED/DESIGNED BY — CHECKED BY

DESIGN OVERSIGHT — BEHZAD GOLEMOHAMMADI

STATE OF CALIFORNIA - DEPARTMENT OF TRANSPORTATION — Caltrans

LAST REVISION 12-21-11 — DATE PLOTTED => 2/28/2012 TIME PLOTTED => 10:46:08 AM

THIS PLAN ACCURATE FOR ELECTRICAL WORK ONLY.

FOR REDUCED PLANS ORIGINAL SCALE IS IN MILLIMETERS 0 20 40 60 80

DGN FILE =>T:\13103\MS\pse\SAS Struc\CCO\SAS CC0190 (Elev 53)\2011.12.21 - Draft 1_Issued for Submittal\04-0120f1_02B8S02R01.dgn
USERNAME =>garciar

CU 04251 | EA 0120F1

DIST	COUNTY	ROUTE	KILOMETER POST TOTAL PROJECT	SHEET No	TOTAL SHEETS
04	SF	80	13.2/13.9	293 R3	1204

REGISTERED ELECTRICAL ENGINEER 12/19/02 DATE

12-6-04
PLANS APPROVAL DATE

REGISTERED PROFESSIONAL ENGINEER JENS ERLINGSSON No. 8249 Exp. 9/30/06 ELECTRICAL STATE OF CALIFORNIA

PB POWER, Inc.
A Parsons Brinckerhoff Company
303 Second St., Suite 700N
San Francisco, CA 94107-1317

The State of California or its officers or agents shall not be responsible for the accuracy or completeness of electronic copies of this plan sheet.

Caltrans now has a web site! To get to the web site, go to http://www.dot.ca.gov

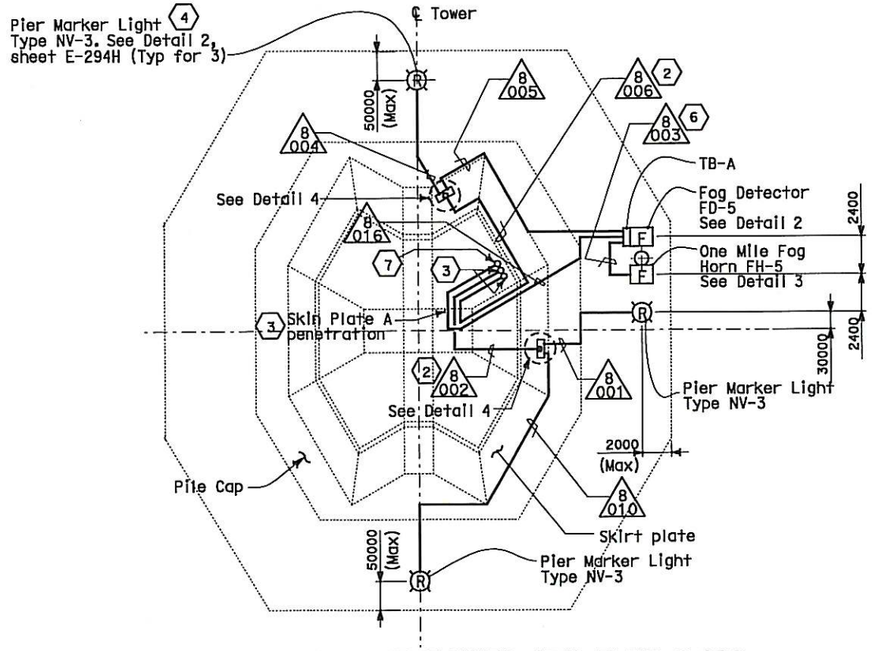

PLAN AT MAIN TOWER (T1) ELEV 3.000 m
NO SCALE

NOTES:

1. References:
   - For SAS Superstructure and tower plan and elevation, see sheet E-291.
   - For Pier 2 girder and footing plans, see sheet E-294.
   - For navigation and aviation lighting fixture schedule, see sheet E-297.
   - For conduit and cable tray schedules, see sheets starting at E-401.
   - For navigation and aviation warning systems connection diagram, see sheet E-303.
   - For fog detection system connection diagram, see sheet E-300.
2. For other related work not shown on this sheet, see Electrical Special Provisions.
3. For wireway layout details see sheet E-264J. (3)

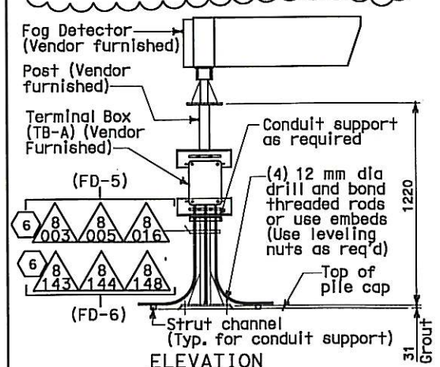

ELEVATION

FOG DETECTOR SYSTEM

DETAIL 2
NO SCALE

TYPICAL FOR FD-5 @ MAIN TOWER (T1) AND FD-6 @ PIER E2

THIS PLAN IS ACCURATE FOR ELECTRICAL WORK ONLY.

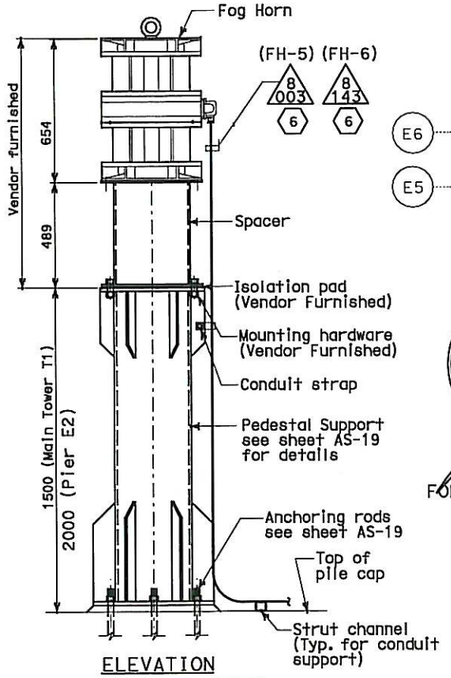

ELEVATION

ONE MILE FOG HORN

DETAIL 3
NO SCALE

TYPICAL FOR FH-5 @ MAIN TOWER (T1) AND FH-6 @ PIER E2

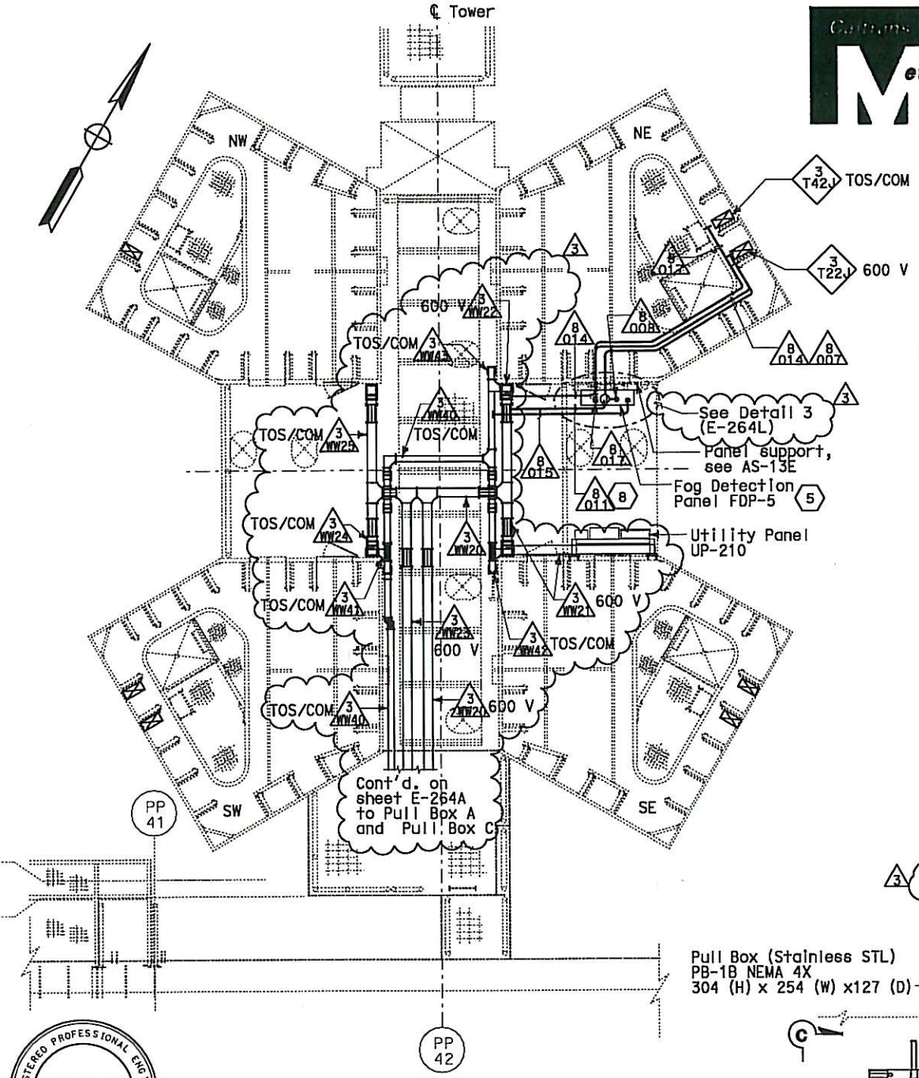

PLAN AT MAIN TOWER (T1) ELEV 53.85 m
SCALE 1:50

REGISTERED PROFESSIONAL ENGINEER DAVID H. OTO No. 10699 Exp. 06/30/2013 ELECTRICAL STATE OF CALIFORNIA

FOR REVISION ONLY (3)

REGISTERED PROFESSIONAL ENGINEER FADI WALIEDDINE No. 11465 Exp. 12/31/2009 ELECTRICAL STATE OF CALIFORNIA

FOR REVISION ONLY (1/2)

MARK	DATE	DESCRIPTIONS	BY	CH'D	CCO#
		REQUEST FOR INFORMATION NOT ADDRESSED IN THIS CCO REMAIN IN FORCE			
3	12/21/11	ELECTRICAL CHANGES FOR ELEVATION 53 IMPROVEMENTS	TW EC	RG RM	190
2	01/07/11	ELECTRICAL WARNING SYSTEMS	TW	RG	61
1	08/03/09	ELECTRICAL WARNING SYSTEMS	RY RR	RG FW	61
		REVISIONS			

CONTRACT CHANGE ORDER NO. 190
SHEET 16 OF 37

SHEET NOTES:

1. Deleted. (3)
2. Route conduit on exterior surface of Tower skirt down to pull box.
3. Conduit up to cable tray (3 T22A) at elevation 13.5 m through skin plate A of NE shaft.
4. Red axis lights shall be attached to the channel-ward face of pier. Each light shall show through a horizontal arc of 180 degrees and shall be mounted on the navigational of pier as low as practicable but not lower than two feet above navigable high water, to show 90 degrees either side of a line parallel to the axis of the bridge.
5. For mounting and support see AS-13E.
6. Conduits #8003 and #8143 shall be installed to accommodate the termination of cables (ckt #2204-4 and ckt #2366-4 respectively) based on maximum cable length of 9000 mm.
7. Conduit up to cable tray (3 T42A) at elevation 13.5 m through skin plate A of NE shaft.
8. Install #2 Bare copper wire (bonding jumper) in conduit (8 011). (3)

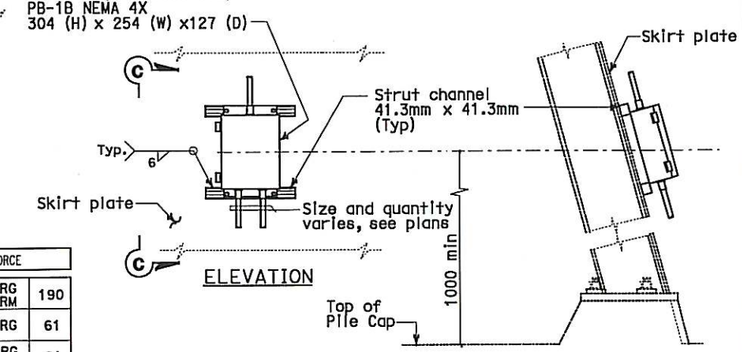

DETAIL 4
NO SCALE

NAVIGATION AND AVIATION WARNING SYSTEMS
TOWER PLANS
SCALE AS NOTED

E-293

ALL DIMENSIONS ARE IN MILLIMETERS UNLESS OTHERWISE SHOWN.

FOR REDUCED PLANS ORIGINAL SCALE IS IN MILLIMETERS 0 20 40 60 80

DGN FILE =>04-0120f1_0293R03.dgn
USERNAME =>llorico

CU 04251 | EA 0120F1

DATE PLOTTED =20-DEC-2011
TIME PLOTTED => 17:13

LAST REVISION 12-21-11

DESIGN OVERSIGHT: BEHZAD GOLEMOHAMMADI

STATE OF CALIFORNIA - DEPARTMENT OF TRANSPORTATION
Caltrans

DATE	REVISED BY	DATE REVISED

CALCULATED/ DESIGNED BY	CHECKED BY

DIST	COUNTY	ROUTE	KILOMETER POST TOTAL PROJECT	SHEET No	TOTAL SHEETS
04	SF	80	13.2/13.9	319 R2	1204

REGISTERED ELECTRICAL ENGINEER 12/19/02 DATE

12-6-04
PLANS APPROVAL DATE

REGISTERED PROFESSIONAL ENGINEER JENS ERLINGSSON No. 8249 Exp. 9/30/06 ELECTRICAL STATE OF CALIFORNIA

PB POWER, Inc.
A Parsons Brinckerhoff Company
303 Second St., Suite 700N
San Francisco, CA 94107-1317

The State of California or its officers or agents shall not be responsible for the accuracy or completeness of electronic copies of this plan sheet.

Caltrans now has a web site! To get to the web site, go to http://www.dot.ca.gov

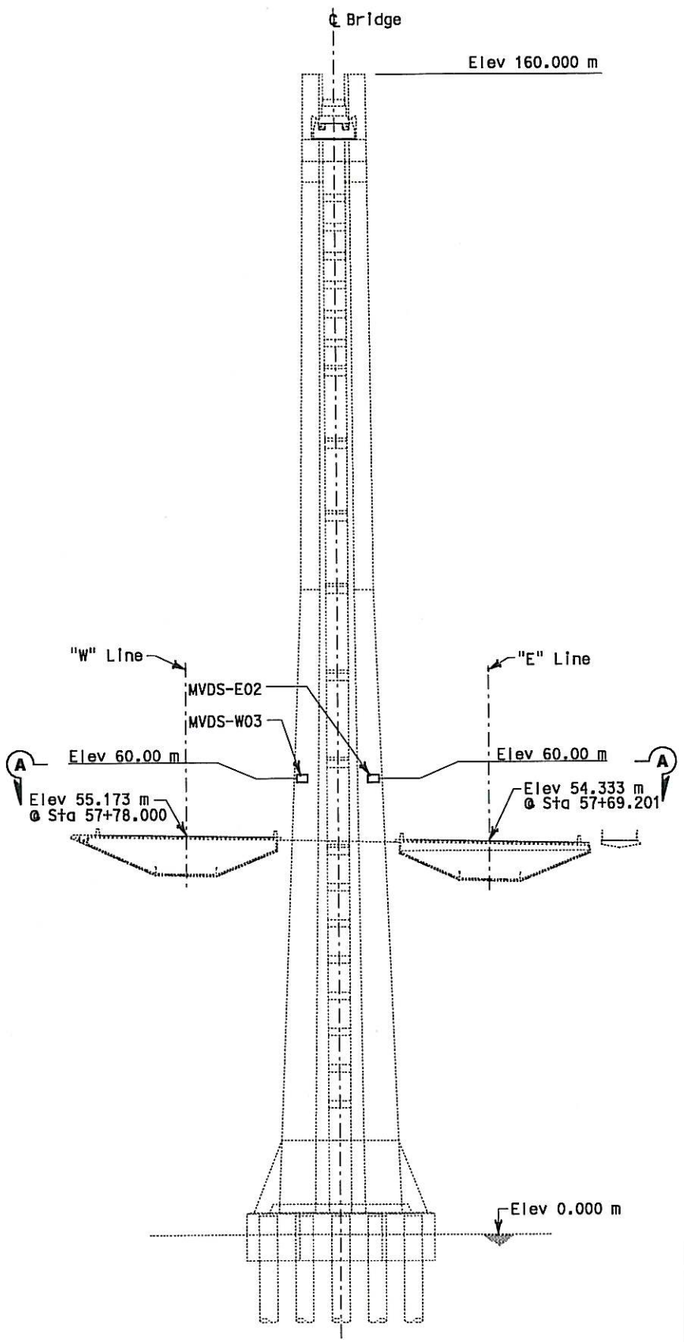

ELEVATION

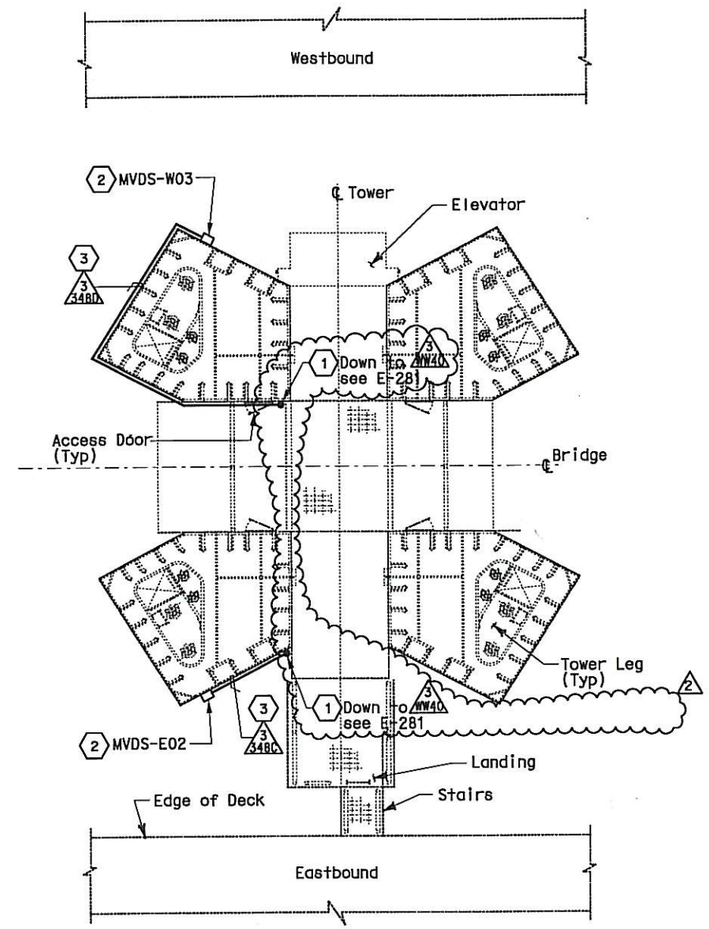

SECTION A-A
PLAN AT ACCESS PLATFORM

SHEET NOTES:

1. For conduit routing from the tower to the cabinet on Platform #6, see sheets E-264A & E-281. MVDS cable inside (wireway) shall be clearly labeled with the designation of the device ID#. 2 2
2. For MVDS bracket mounting details, see Detail 1 and Detail 2 on sheet E-344.
3. Install conduit from MVDS at elevation 60.00 m to MVDS JCB on access platform. Exact conduit routing to be determined by the Contractor.

REGISTERED PROFESSIONAL ENGINEER DAVID H. OTO No. 10699 Exp. 06/30/2013 ELECTRICAL STATE OF CALIFORNIA

FOR REVISION ONLY 2

REGISTERED PROFESSIONAL ENGINEER FADI WALIEDDINE No. 11465 Exp. ELECTRICAL STATE OF CALIFORNIA

FOR REVISION ONLY 1

MVDS SCHEDULE

ID #	ELEMENT STATION	LIGHTPOLE ID	OFFSET m	CABINET ID #	SERVICE PLATFORM REFERENCE SHEET
MVDS-E02	E 57+70	Tower	L 15.5	TOS-06EA	E-73
MVDS-W03	W 57+78	Tower	R 15.5	TOS-06WA	E-73

REQUEST FOR INFORMATION NOT ADDRESSED IN THIS CCO REMAIN IN FORCE

MARK	DATE	DESCRIPTIONS	BY	CH'D	CCO#
2	12/21/11	ELECTRICAL CHANGE FOR ELEVATION 53 IMPROVEMENTS	TW	RG	190
1	12/11/09	TOWER UTILITY PANELS	TW	RG FW	70

REVISIONS

CONTRACT CHANGE ORDER NO. 190
SHEET 17 OF 37

DETAILS
TRAFFIC OPERATIONS SYSTEM
MICROWAVE VEHICLE DETECTION SENSOR SYSTEM
TOWER INSTALLATION
NO SCALE

E-345

DATE	REVISED BY	DATE REVISED
11/01	MD	12/01 PBF

CALCULATED/DESIGNED BY
CHECKED BY

DESIGN OVERSIGHT
BEHZAD GOLEMOHAMMADI

STATE OF CALIFORNIA - DEPARTMENT OF TRANSPORTATION
Caltrans

THIS PLAN IS ACCURATE FOR ELECTRICAL WORK ONLY

ALL DIMENSIONS IN MILLIMETERS UNLESS OTHERWISE SHOWN.

FOR REDUCED PLANS ORIGINAL SCALE IS IN MILLIMETERS 0 20 40 60 80

DGN FILE =>04-0120f1_0319R02.dgn
USERNAME =>llorica

CU 04251

EA 0120F1

LAST REVISION 12-21-11
DATE PLOTTED => 20-DEC-2011
TIME PLOTTED => 17:13

DIST	COUNTY	ROUTE	KILOMETER POST TOTAL PROJECT	SHEET No	TOTAL SHEETS
04	SF	80	13.2/13.9	334 R4	1204

REGISTERED ELECTRICAL ENGINEER 12/19/02 DATE

12-6-04
PLANS APPROVAL DATE

REGISTERED PROFESSIONAL ENGINEER JENS ERLINGSSON No. 8249 Exp. 9/30/06 ELECTRICAL STATE OF CALIFORNIA

PB POWER, Inc.
A Parsons Brinckerhoff Company
303 Second St., Suite 700N
San Francisco, CA 94107-1317

The State of California or its officers or agents shall not be responsible for the accuracy or completeness of electronic copies of this plan sheet.

Caltrans now has a web site! To get to the web site, go to: http://www.dot.ca.gov

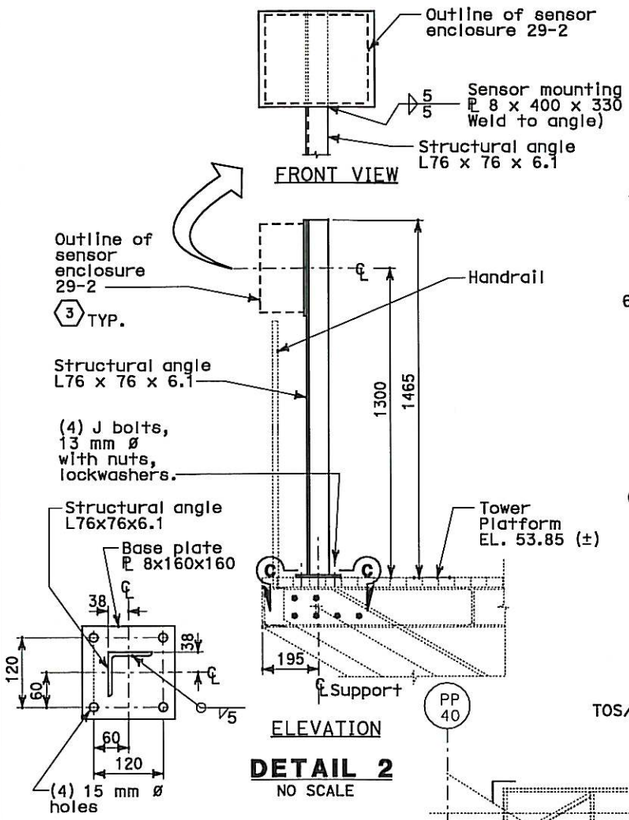

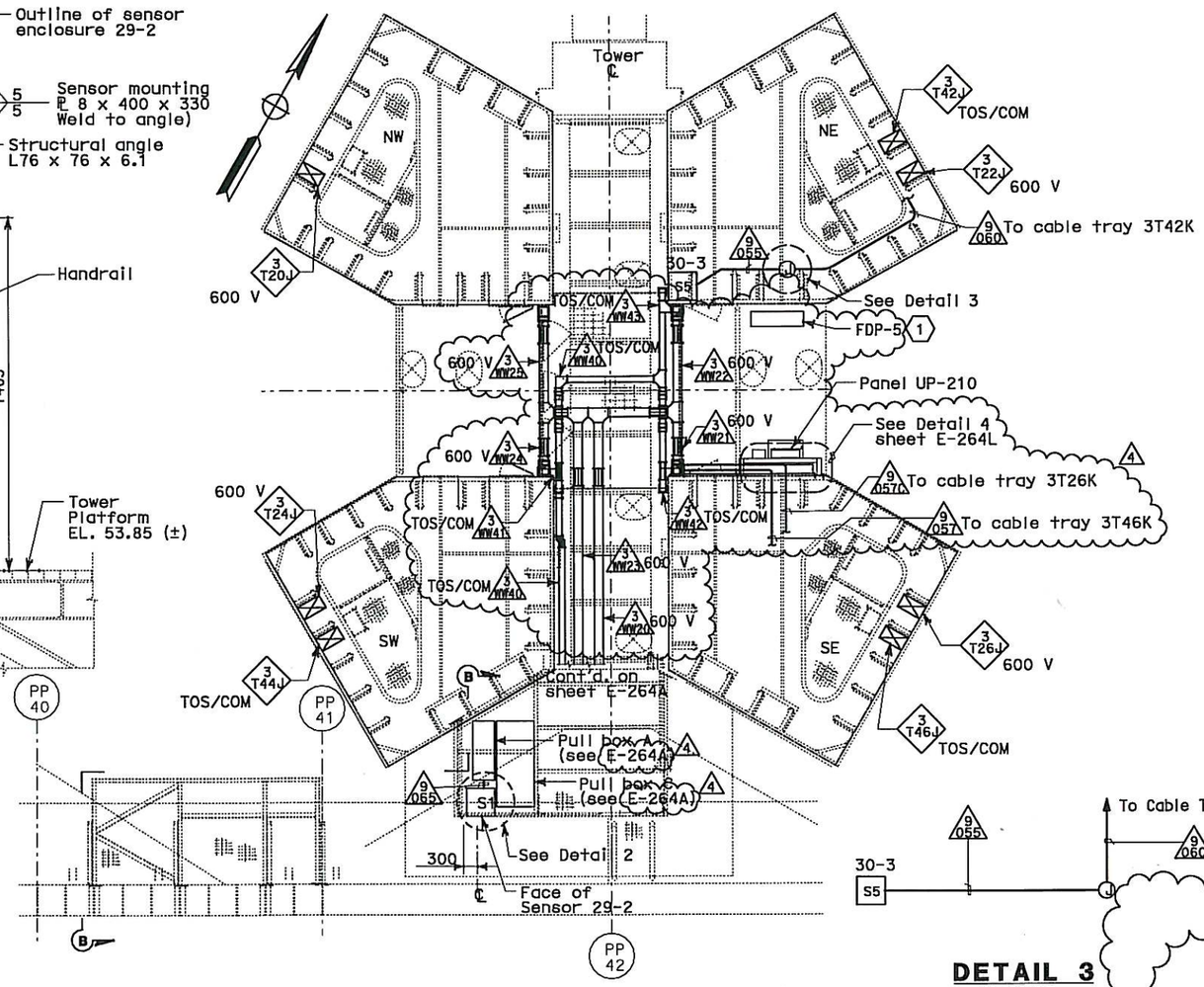

PLAN AT MAIN TOWER, ELEV 53.85 m

SCALE 1:50

Some conduits and equipment are not shown for clarity. See sheets E-264, E-264B, E-281 and E-345 for more conduit and equipment information

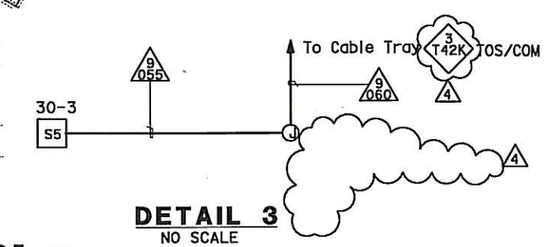

NOTES:

1. For other related work not shown on this drawing, see Electrical Special Provisions.
2. References:
   - For nameplates, sensor enclosures and recorder schedules, see sheets E-379, E-380 and E-381.
   - For cable block diagram, see sheets E-382, E-383 and E-384.
   - For general notes on the strong motion detection system, see sheet E-361.
   - For circuit and conduit/cable tray schedules, see sheets starting at E-401.
3. All conduits and fittings located outside or inside pier shall be rigid galvanized steel, PVC coated.
4. Deleted.
5. For Section B-B, see sheet E-264A.
6. For wireway layout & details see sheet E-264. (4)

SHEET NOTES: (4)

1. For FDP-5 location, conduit route & mounting details, see sheets E-293 and AS-13E.
2. Deleted
3. For nameplate engraving, see nameplate Schedule on sheet E-379. (4)
4. Deleted.
5. Deleted

REQUEST FOR INFORMATION NOT ADDRESSED IN THIS CCO REMAIN IN FORCE					
4	12/21/11	ELECTRICAL CHANGES FOR ELEVATION 53 IMPROVEMENTS	TW EC	RG RM	190
3	09/18/09	TOWER UTILITY PANELS	TW	RG FW	70
2	10/03/08	STRONG MOTION SYSTEM	RG	FW	74
1	02/19/08	ELECTRICAL MODIFICATIONS	MP EL	RR	42
MARK	DATE	DESCRIPTIONS	BY	CH'D	CCO#
		REVISIONS			

CONTRACT CHANGE ORDER NO. 190
SHEET 18 OF 37

REGISTERED PROFESSIONAL ENGINEER MAXWELL FUMIO TAKAKI No. E 8651 Exp. 9/30/2008 ELECTRICAL STATE OF CALIFORNIA
FOR REVISION ONLY (1)

REGISTERED PROFESSIONAL ENGINEER FADI WALIEDDINE No. 11465 Exp. 12/31/2009 ELECTRICAL STATE OF CALIFORNIA
FOR REVISION ONLY (2) (3)

REGISTERED PROFESSIONAL ENGINEER DAVID H. OTO No. 10699 Exp. 06/30/2013 ELECTRICAL STATE OF CALIFORNIA
FOR REVISION ONLY (4)

STRONG MOTION DETECTION SYSTEM
SAS SUPERSTRUCTURE
TOWER PLATFORM CONDUIT AND SENSOR LOCATION

SCALE AS NOTED

E-366

THIS PLAN IS ACCURATE FOR ELECTRICAL WORK ONLY.

ALL DIMENSIONS ARE IN MILLIMETERS UNLESS OTHERWISE SHOWN.

FOR REDUCED PLANS ORIGINAL SCALE IS IN MILLIMETERS 0 20 40 60 80

DGN FILE =>04-0120f1_0334R04.dgn
USERNAME =>llorlco

CU 04251 | EA 0120F1

STATE OF CALIFORNIA - DEPARTMENT OF TRANSPORTATION
Caltrans

DESIGN OVERSIGHT: BEHZAD GOLEMOHAMMADI

CALCULATED/DESIGNED BY	CHECKED BY	DATE REVISED	REVISED BY
EDC	KG	10/01 11/01	AB 2/04

LAST REVISION 12-21-11 | DATE PLOTTED => 20-DEC-2011 | TIME PLOTTED => 17:13

DIST	COUNTY	ROUTE	KILOMETER POST TOTAL PROJECT	SHEET No	TOTAL SHEETS
04	SF	80	13.2/13.9	344 R3	1204

REGISTERED ELECTRICAL ENGINEER 12/19/02 DATE

12-6-04
PLANS APPROVAL DATE

REGISTERED PROFESSIONAL ENGINEER JENS ERLINGSSON No. 8249 Exp. 9/30/06 ELECTRICAL STATE OF CALIFORNIA

PB POWER, Inc.
A Parsons Brinckerhoff Company
303 Second St., Suite 700N
San Francisco, CA 94107-1317

The State of California or its officers or agents shall not be responsible for the accuracy or completeness of electronic copies of this plan sheet.

Caltrans now has a web site! To get to the web site, go to http://www.dot.ca.gov

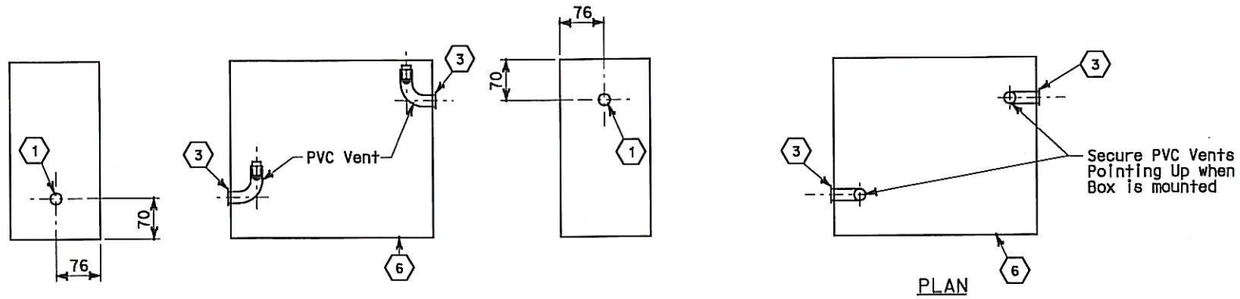

SIDE VIEW — ELEVATION — SIDE VIEW

ENCLOSURE VENTING DETAIL
VERTICAL MOUNT

PLAN

ENCLOSURE VENTING DETAIL
HORIZONTAL MOUNT

PVC VENT DETAIL

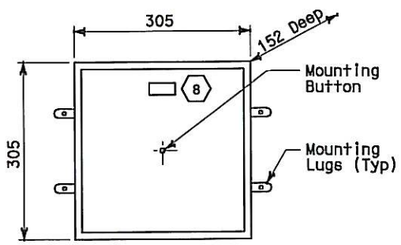

TYPE 1
CAST METAL BOX

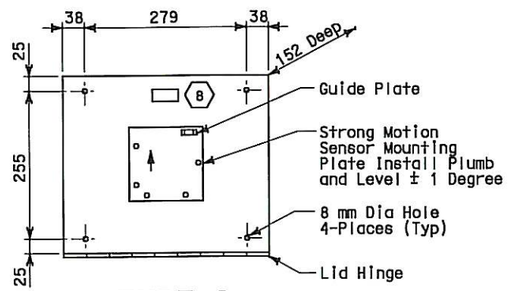

TYPE 2
STAINLESS STEEL BOX

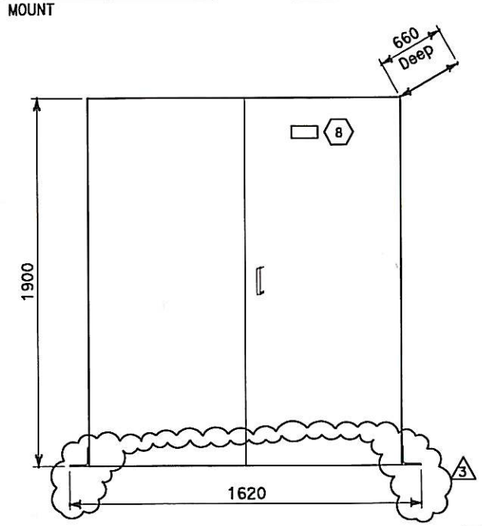

STRONG MOTION RECORDER (7)
CALTRANS TYPE S

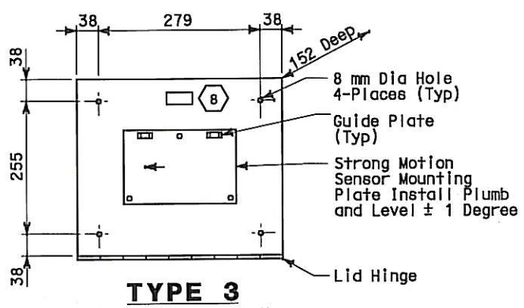

TYPE 3
STAINLESS STEEL BOX

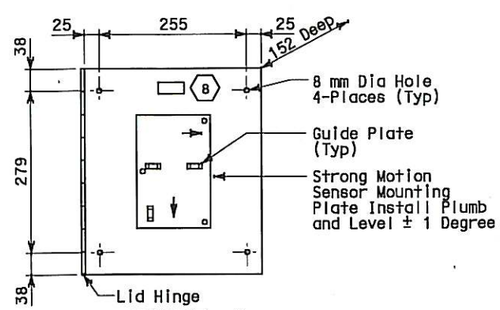

TYPE 4
STAINLESS STEEL BOX

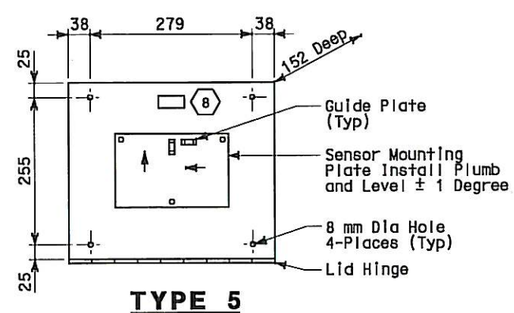

TYPE 5
STAINLESS STEEL BOX

ENCLOSURE DETAILS
FRONT VIEW

SHEET NOTES:

(1) Punch hole for 27C.

(2) 27C, schedule 40 PVC, 90 °elbow (female threaded-female slip).

(3) 27 chase nipple, zinc.

(4) 27C, schedule 40 PVC. Secure item in place with PVC cement (length as required, cut after installation).

(5) Hose screen, Stainless steel screen material (used in washing machine).

(6) 3.2 mm diameter drain hole. Drill at the lowest point of the box to drain any moisture.

(7) Enclosures for Strong Motion Recorders #3 and #2 shall be Caltrans Type S, corrosion resistant without shelves or police panels.

(8) See Sheet E-379 for nameplate schedule for engravings and materials.

NOTES:

1. The high and low vent sides shall be selected as required to facilitate conduit entrances and mounting location.
2. Strong motion sensor enclosures and mounting plates shall be installed parallel and perpendicular to the structure unless otherwise noted.
3. Strong motion enclosures shall be mounted to concrete with concrete fasteners, 6.35 dia, 40 mm depth embedment and allowable working load of tension at 1.223 kN and shear 2.91 kN. Enclosures mounted on structural steel shall be drill and tap. The strong motion sensor mounting plate shall be bolted through the enclosure to the structural steel. All hardware shall be stainless steel.
4. For Downhole Enclosures details, see Sheet E-366A.

REGISTERED PROFESSIONAL ENGINEER FADI WALIEDDINE No. 11465 Exp. 12/31/2009 ELECTRICAL STATE OF CALIFORNIA

FOR REVISION ONLY (1)(2)

REGISTERED PROFESSIONAL ENGINEER DAVID H. OTO No. 10699 Exp. 06/30/2013 ELECTRICAL STATE OF CALIFORNIA

FOR REVISION ONLY (3)

REQUEST FOR INFORMATION NOT ADDRESSED IN THIS CCO REMAIN IN FORCE					
3	12/21/11	ELECTRICAL CHANGES FOR ELEVATION 53 IMPROVEMENTS	TW EC	RG RM	190
2	10/03/08	STRONG MOTION SYSTEM	RG	FW	74
1	02/19/08	ELECTRICAL MODIFICATIONS	MP EL	RR	42
MARK	DATE	DESCRIPTIONS	BY	CH'D	CCO#
		REVISIONS			

CONTRACT CHANGE ORDER NO. 190
SHEET 19 OF 37

ALL DIMENSIONS ARE IN MILLIMETERS UNLESS OTHERWISE SHOWN.

THIS PLAN IS ACCURATE FOR ELECTRICAL WORK ONLY.

DETAILS
STRONG MOTION DETECTION SYSTEM SENSOR AND RECORDER ENCLOSURES
NO SCALE

E-378

REVISED BY	DATE REVISED
EJL	DATE 10/00
CYF	11/00

CALCULATED/DESIGNED BY — CHECKED BY

DESIGN OVERSIGHT — BEHZAD GOLEMOHAMMADI

STATE OF CALIFORNIA - DEPARTMENT OF TRANSPORTATION

Caltrans

FOR REDUCED PLANS ORIGINAL SCALE IS IN MILLIMETERS 0 20 40 60 80

DGN FILE =>04-0120f1_0344R03.dgn
USERNAME =>llorico

CU 04251 | EA 0120F1

LAST REVISION 12-21-11 | DATE PLOTTED => 20-DEC-2011 | TIME PLOTTED => 17:13

DIST	COUNTY	ROUTE	KILOMETER POST TOTAL PROJECT	SHEET No	TOTAL SHEETS
04	SF	80	13.2/13.9	357 S3R2	1204

REGISTERED ELECTRICAL ENGINEER 2/22/08 DATE

PLANS APPROVAL DATE

REGISTERED PROFESSIONAL ENGINEER S. A. ESTOQUE, JR. No. E-10151 Exp. 12/31/2008 ELECTRICAL STATE OF CALIFORNIA

PB AMERICAS, Inc.
A Parsons Brinckerhoff Company
303 Second St., Suite 700N
San Francisco, CA 94107-1317

The State of California or its officers or agents shall not be responsible for the accuracy or completeness of electronic copies of this plan sheet.

Caltrans now has a web site! To get to the web site, go to http://www.dot.ca.gov

REQUEST FOR INFORMATION NOT ADDRESSED IN THIS CCO REMAIN IN FORCE

MARK	DATE	DESCRIPTIONS	BY	CH'D	CCO#
2	12/21/11	ELECTRICAL CHANGE FOR ELEVATION 53 IMPROVEMENTS	TW	RG	190
1	03/26/10	DEHUMIDIFIER SCADA INTERFACE	TW	RG SYC	130
0	02/25/08	CABLE TRAY CHANGES	RR TW	RG	42S1

REVISIONS

CONTRACT CHANGE ORDER NO. 190
SHEET 20 OF 37

REGISTERED PROFESSIONAL ENGINEER DAVID H. OTO No. 10699 Exp. 06/30/2013 ELECTRICAL STATE OF CALIFORNIA
FOR REVISION ONLY 2

REGISTERED PROFESSIONAL ENGINEER SYN YEE CHIN No. 18186 Exp. 09/30/2011 ELECTRICAL STATE OF CALIFORNIA
FOR REVISION ONLY 1

CONDUIT DATA

Conduit No	Reference	Size	Type	Total Fill (mm²)	Allowable Fill (mm²)	Included Cable No.	Conductor Type
0800	E-21, E21B	103	Liquidtight flex metal conduit		3275.44	Pull rope	Soft-Fiber Polyester
0801	E-21, E21B	103	Liquidtight flex metal conduit		3275.44	Pull rope	Soft-Fiber Polyester
0802	E-21, E21B	103	Liquidtight flex metal conduit		3275.44	Pull rope	Soft-Fiber Polyester
0803	E-21, E21B	103	Liquidtight flex metal conduit		3275.44	Pull rope	Soft-Fiber Polyester
0804	E-21, E21B	103	Liquidtight flex metal conduit		3275.44	Pull rope	Soft-Fiber Polyester
0805	E-21, E21B	103	Liquidtight flex metal conduit		3275.44	Pull rope	Soft-Fiber Polyester
0806	E-21, E21B	103	Liquidtight flex metal conduit		3275.44	Pull rope	Soft-Fiber Polyester
0807	E-21, E21B	103	Liquidtight flex metal conduit		3275.44	Pull rope	Soft-Fiber Polyester
0808	E-21, E21B	103	Liquidtight flex metal conduit		3275.44	Pull rope	Soft-Fiber Polyester
0809	E-21, E21B	103	Liquidtight flex metal conduit		3275.44	Pull rope	Soft-Fiber Polyester
0810	E-21, E21B	103	Liquidtight flex metal conduit		3275.44	Pull rope	Soft-Fiber Polyester
0811	E-21, E21B	103	Liquidtight flex metal conduit		3275.44	Pull rope	Soft-Fiber Polyester
0812	E-21, E21B	103	Liquidtight flex metal conduit	754.18	4339.96	Pull rope	
						2120	1-3/C + gnd #1/0, 600 V, EPR Insulation 2
0813	E-21, E21B	103	Liquidtight flex metal conduit	754.18	4339..96	Pull rope	
						2121	1-3/C + gnd #1/0, 600 V, EPR Insulation 2
0814	E-21, E21B	103	Liquidtight flex metal conduit		3275.44	Pull rope	Soft-Fiber Polyester
0815	E-21, E21B	103	Liquidtight flex metal conduit		3275.44	Pull rope	Soft-Fiber Polyester
0816	E-21, E21B	103	Liquidtight flex metal conduit		3275.44	Pull rope	Soft-Fiber Polyester
0817	E-21, E21B	103	Liquidtight flex metal conduit		3275.44	Pull rope	Soft-Fiber Polyester
0818	E-21, E21B	103	Liquidtight flex metal conduit		3275.44	Pull rope	Soft-Fiber Polyester
0819	E-21, E21B	103	Liquidtight flex metal conduit	882.89	3275.44	Pull rope	Soft-Fiber Polyester
						1118	1-3/C + gnd #2/0, 600 V, EPR Insulation
0820	E-21, E21B	103	Liquidtight flex metal conduit	0.00 2	3275.44	Pull rope	Soft-Fiber Polyester 2
0821	E-21, E21B	103	Liquidtight flex metal conduit		3275.44	Pull rope	Soft-Fiber Polyester
0822A	E-212A	103	RGS Conduit (Pipe Sleeve)		3324.51	Pull rope	Soft-Fiber Polyester
0823A	E-212A	103	RGS Conduit (Pipe Sleeve)		3324.51	Pull rope	Soft-Fiber Polyester
0823B	E-212A	103	RGS Conduit (Pipe Sleeve)		3324.51	Pull rope	Soft-Fiber Polyester
0823C	E-212A	103	RGS Conduit (Pipe Sleeve)		3324.51	Pull rope	Soft-Fiber Polyester
0823D	E-212A	103	RGS Conduit (Pipe Sleeve)		3324.51	Pull rope	Soft-Fiber Polyester
0824A	E-212A	103	RGS Conduit (Pipe Sleeve)		3324.51	Pull rope	Soft-Fiber Polyester
0824B	E-212A	103	RGS Conduit (Pipe Sleeve)		3324.51	Pull rope	Soft-Fiber Polyester

CONDUIT DATA

Conduit No	Reference	Size	Type	Total Fill (mm²)	Allowable Fill (mm²)	Included Cable No.	Conductor Type
0824C	E-212A	103	RGS Conduit (Pipe Sleeve)		3324.51	Pull rope	Soft-Fiber Polyester
0824D	E-212A	103	RGS Conduit (Pipe Sleeve)		3324.51	Pull rope	Soft-Fiber Polyester
0825A	E-212A	103	RGS Conduit (Pipe Sleeve)		3324.51	Pull rope	Soft-Fiber Polyester
0825B	E-212A	103	RGS Conduit (Pipe Sleeve)		3324.51	Pull rope	Soft-Fiber Polyester
0825C	E-212A	103	RGS Conduit (Pipe Sleeve)		3324.51	Pull rope	Soft-Fiber Polyester
0825D	E-212A	103	RGS Conduit (Pipe Sleeve)	0.00 2	3324.51	Pull rope	Soft-Fiber Polyester 2
0825E	E-212A	103	RGS Conduit (Pipe Sleeve)	882.89 2	4404.97	Pull rope	Soft-Fiber Polyester 2
						1118	1-3/C + gnd #2/0, 600 V, EPR Insulation
0825F	E-212A	103	RGS Conduit (Pipe Sleeve)		3324.51	Pull rope	Soft-Fiber Polyester
0826A	E-212A	103	RGS Conduit (Pipe Sleeve)		3324.51	Pull rope	Soft-Fiber Polyester
0826B	E-212A	103	RGS Conduit (Pipe Sleeve)	1508.36 2	2576.49	Pull rope	Soft-Fiber Polyester 2
						2120	1-3/C + gnd #1/0, 600 V, EPR Insulation
						2121	1-3/C + gnd #1/0, 600 V, EPR Insulation
0826C	E-212A	103	RGS Conduit (Pipe Sleeve)		3324.51	Pull rope	Soft-Fiber Polyester
0826D	E-212A	103	RGS Conduit (Pipe Sleeve)		3324.51	Pull rope	Soft-Fiber Polyester
0826E	E-212A	103	RGS Conduit (Pipe Sleeve)		3324.51	Pull rope	Soft-Fiber Polyester
0826F	E-212A	103	RGS Conduit (Pipe Sleeve)		3324.51	Pull rope	Soft-Fiber Polyester

CONDUIT AND TRAY SCHEDULE

E-402C

DATE	REVISED BY	DATE REVISED

CALCULATED/DESIGNED BY | CHECKED BY

DESIGN OVERSIGHT
BEHZAD GOLEMOHAMADI

STATE OF CALIFORNIA - DEPARTMENT OF TRANSPORTATION
Caltrans

LAST REVISION 12-21-11
DATE PLOTTED => 20-DEC-2011
TIME PLOTTED => 17:13

FOR REDUCED PLANS ORIGINAL SCALE IS IN MILLIMETERS 0 20 40 60 80

DGN FILE =>04-0120f1_0357S03R02.dgn
USERNAME =>llorico

CU 04251 | EA 0120F1

DIST	COUNTY	ROUTE	KILOMETER POST TOTAL PROJECT	SHEET No	TOTAL SHEETS
04	SF	80	13.2/13.9	357 S4R2	1204

REGISTERED ELECTRICAL ENGINEER 2/22/08 DATE

PLANS APPROVAL DATE

REGISTERED PROFESSIONAL ENGINEER S. A. ESTOQUE, JR. No. E-10151 Exp. 12/31/2008 ELECTRICAL STATE OF CALIFORNIA

PB AMERICAS, Inc.
A Parsons Brinckerhoff Company
303 Second St., Suite 700N
San Francisco, CA 94107-1317

The State of California or its officers or agents shall not be responsible for the accuracy or completeness of electronic copies of this plan sheet.

Caltrans now has a web site! To get to the web site, go to http://www.dot.ca.gov

Caltrans Metric

REQUEST FOR INFORMATION NOT ADDRESSED IN THIS CCO REMAIN IN FORCE

MARK	DATE	DESCRIPTIONS	BY	CH'D	CCO#
2	12/21/11	ELECTRICAL CHANGE FOR ELEVATION 53 IMPROVEMENTS	TW	RG	190
1	03/26/10	DEHUMIDIFIER SCADA INTERFACE	TW	RG SYC	130
0	02/25/08	CABLE TRAY CHANGES	RR TW	RG	42S1

REVISIONS

CONTRACT CHANGE ORDER NO. 190
SHEET 21 OF 37

REGISTERED PROFESSIONAL ENGINEER DAVID H. OTO No. 10699 Exp. 06/30/2013 ELECTRICAL STATE OF CALIFORNIA
FOR REVISION ONLY 2

REGISTERED PROFESSIONAL ENGINEER SYN YEE CHIN No. 18186 Exp. 09/30/2011 ELECTRICAL STATE OF CALIFORNIA
FOR REVISION ONLY 1

CONDUIT DATA

Conduit No	Reference	Size	Type	Total Fill (mm²)	Allowable Fill (mm²)	Included Cable No.	Conductor Type
0832A	E-212, E212A	103	Liquidtight flex metal conduit		3275.44	Pull rope	Soft-Fiber Polyester
0833A	E-212, E212A	103	Liquidtight flex metal conduit		3275.44	Pull rope	Soft-Fiber Polyester
0833B	E-212, E212A	103	Liquidtight flex metal conduit		3275.44	Pull rope	Soft-Fiber Polyester
0833C	E-212, E212A	103	Liquidtight flex metal conduit		3275.44	Pull rope	Soft-Fiber Polyester
0833D	E-212, E212A	103	Liquidtight flex metal conduit		3275.44	Pull rope	Soft-Fiber Polyester
0834A	E-212, E212A	103	Liquidtight flex metal conduit		3275.44	Pull rope	Soft-Fiber Polyester
0834B	E-212, E212A	103	Liquidtight flex metal conduit		3275.44	Pull rope	Soft-Fiber Polyester
0834C	E-212, E212A	103	Liquidtight flex metal conduit		3275.44	Pull rope	Soft-Fiber Polyester
0834D	E-212, E212A	103	Liquidtight flex metal conduit		3275.44	Pull rope	Soft-Fiber Polyester
0835A	E-212, E212A	103	Liquidtight flex metal conduit		3275.44	Pull rope	Soft-Fiber Polyester
0835B	E-212, E212A	103	Liquidtight flex metal conduit		3275.44	Pull rope	Soft-Fiber Polyester
0835C	E-212, E212A	103	Liquidtight flex metal conduit		3275.44	Pull rope	Soft-Fiber Polyester
0835D	E-212, E212A	103	Liquidtight flex metal conduit	0.00 (2)	3275.44	Pull rope	Soft-Fiber Polyester (2)
0835E	E-212, E212A	103	Liquidtight flex metal conduit	882.89 (2)	4339.96	Pull rope	Soft-Fiber Polyester (2)
						1118	1-3/C + gnd #2/0, 600 V, EPR Insulation
0835F	E-212, E212A	103	Liquidtight flex metal conduit		3275.44	Pull rope	Soft-Fiber Polyester
0836A	E-212, E212A	103	Liquidtight flex metal conduit		3275.44	Pull rope	Soft-Fiber Polyester
0836B	E-212, E212A	103	Liquidtight flex metal conduit	1508.36 (2)	2538.48	Pull rope	Soft-Fiber Polyester (2)
						2120	1-3/C + gnd #1/0, 600 V, EPR Insulation
						2121	1-3/C + gnd #1/0, 600 V, EPR Insulation
0836C	E-212, E212A	103	Liquidtight flex metal conduit		3275.44	Pull rope	Soft-Fiber Polyester
0836D	E-212, E212A	103	Liquidtight flex metal conduit		3275.44	Pull rope	Soft-Fiber Polyester
0836E	E-212, E212A	103	Liquidtight flex metal conduit		3275.44	Pull rope	Soft-Fiber Polyester
0836F	E-212, E212A	103	Liquidtight flex metal conduit		3275.44	Pull rope	Soft-Fiber Polyester

CONDUIT DATA

Conduit No	Reference	Size	Type	Total Fill (mm²)	Allowable Fill (mm²)	Included Cable No.	Conductor Type

CONDUIT AND TRAY SCHEDULE

E-402D

REVISED BY	DATE	DATE REVISED

CALCULATED/DESIGNED BY | CHECKED BY

DESIGN OVERSIGHT
BEHZAD GOLEMOHAMMADI

STATE OF CALIFORNIA - DEPARTMENT OF TRANSPORTATION
Caltrans

LAST REVISION 12-21-11 | DATE PLOTTED => 20-DEC-2011 TIME PLOTTED => 17:13

FOR REDUCED PLANS ORIGINAL SCALE IS IN MILLIMETERS 0 20 40 60 80

DGN FILE =>04-0120f1_0357S04R02.dgn
USERNAME =>llorico

CU 04251 | EA 0120F1

DIST	COUNTY	ROUTE	KILOMETER POST TOTAL PROJECT	SHEET No	TOTAL SHEETS
04	SF	80	13.2/13.9	373 R9	1204

REGISTERED ELECTRICAL ENGINEER 12/19/02 DATE

12-6-04
PLANS APPROVAL DATE

REGISTERED PROFESSIONAL ENGINEER JENS ERLINGSSON No. 8249 Exp. 9/30/06 ELECTRICAL STATE OF CALIFORNIA

PB POWER, Inc.
A Parsons Brinckerhoff Company
303 Second St., Suite 700N
San Francisco, CA 94107-1317

The State of California or its officers or agents shall not be responsible for the accuracy or completeness of electronic copies of this plan sheet.

Caltrans now has a web site! To get to the web site, go to: http://www.dot.ca.gov

Caltrans Metric

REGISTERED PROFESSIONAL ENGINEER SYN YEE CHIN No. 18186 Exp. 09/30/2013 ELECTRICAL STATE OF CALIFORNIA

Syn Yee Chin
FOR REVISION ONLY
4 5 6 7 8

REGISTERED PROFESSIONAL ENGINEER FADI WALIEDDINE No. 11465 Exp. 12/31/2009 ELECTRICAL STATE OF CALIFORNIA

FOR REVISION ONLY
3

REGISTERED PROFESSIONAL ENGINEER S. A. ESTOQUE, JR. No. E-10151 Exp. 12/31/2009 ELECTRICAL STATE OF CALIFORNIA

FOR REVISION ONLY
1 2

REGISTERED PROFESSIONAL ENGINEER DAVID H. OTO No. 10699 Exp. 06/30/2013 ELECTRICAL STATE OF CALIFORNIA

FOR REVISION ONLY
9

REQUEST FOR INFORMATION NOT ADDRESSED IN THIS CCO REMAIN IN FORCE

MARK	DATE	DESCRIPTIONS	BY	CH'D	CCO#
9	12/21/11	ELECTRICAL CHANGE FOR ELEVATION 53 IMPROVEMENTS	TW	RG	190
8	07/01/11	TOS MODIFICATIONS	RR	RG	81
7	03/24/11	BIKE PATH CONDUIT	TW	RG	73
6	01/07/11	ELECTRICAL WARNING SYSTEMS	TW	RG	61
5	06/11/10	BIKE PATH CONDUIT	TW	RG	73
4	03/26/10	DEHUMIDIFIER SCADA INTERFACE	RR	RG FW	130
3	03/30/09	SERVICE PLATFORM ELECTRICAL CHANGES	RY RR	RG MP	55
2	02/25/08	CABLE TRAY CHANGES	RR TW	RG	42S1
1	03/04/08	BARRIER MODIFICATIONS	JS BM	RG	44

REVISIONS

CONTRACT CHANGE ORDER NO. 190
SHEET 22 OF 37

CONDUIT DATA

Conduit No	Reference	Size	Type	Total Fill (mm²)	Allowable Fill (mm²)	Included Cable No.	Conductor Type
2959	E-139	41	RGS conduit	0.00	534.55	Pull rope	Soft-Fiber Polyester
2960	E-139	41	RGS conduit	212.85	534.55	Pull rope	Soft-Fiber Polyester
						LP223-2A,4A	3 + 1 gnd #6,#8, 600 V, RHH/RHW Insulation
2961	E-139	41	RGS conduit	0.00	534.55	Pull rope	Soft-Fiber Polyester
2962	E-138	41	RGS conduit	0.00	534.55	Pull rope	Soft-Fiber Polyester
2963	E-138	41	RGS conduit	0.00	534.55	Pull rope	Soft-Fiber Polyester
2964	E-138	41	RGS conduit	0.00	534.55	Pull rope	Soft-Fiber Polyester
2965	E-138	41	RGS conduit	0.00	534.55	Pull rope	Soft-Fiber Polyester
2966	E-138	41	RGS conduit	0.00	534.55	Pull rope	Soft-Fiber Polyester
2967	E-138	41	RGS conduit	0.00	534.55	Pull rope	Soft-Fiber Polyester
2T13	E-181 Thru E-186	305	152.4 mm siderail ladder tray	2780.99	8387.08	Pull rope	Soft-Fiber Polyester
	E-212A					2391	3-1/C #4/0 + 1/C #1/0 gnd, 15kV, EPR Insulation
2T14	E-212, E-21B	305	152.4 mm siderail ladder tray	2780.99	8387.08	Pull rope	Soft-Fiber Polyester
						2391	3-1/C #4/0 + 1/C #1/0 gnd, 15kV, EPR Insulation
2T14A	E-21, E-21E	305	152.4 mm siderail ladder tray	0.00	8387.08		
2T14B	E-21, E-21E	305	152.4 mm siderail ladder tray	0.00	8387.08		
2T21	E182,E207C,E264	610	152.4 mm siderail ladder tray	2120.21	16774.16	2121	1-3/C + gnd #1/0,600 V, EPR Insulation
						2120	1-3/C + gnd #1/0,600 V, EPR Insulation
						1201-1	1-2/C + gnd #10, 600 V, EPR Insulation
						1201-2	1-2/C + gnd #10, 600 V, EPR Insulation
						1201-6	1-2/C + gnd #10, 600 V, EPR Insulation
						1201-4A	1-2/C #14, 600 V, EPR Insulation
						1201-4B	1-2/C #14, 600 V, EPR Insulation
						1201-4C	1-2/C #14, 600 V, EPR Insulation
2T23	E-114B	760	152.4 mm siderail ladder tray	20412.65 (9)	22580.60	2202-2	1-3/C #14,600 V, EPR Insulation
						A-3004-1	1-3/C + gnd #2,600 V, EPR Insulation
						A-3003-1	1-3/C + gnd #4,600 V, EPR Insulation
						A-2013-1	1-3/C + gnd #2,600 V, EPR Insulation
						A-2012-1	1-3/C + gnd #2,600 V, EPR Insulation
						2123	1-3/C + gnd #2,600 V, EPR Insulation
						2202-3	1-7/C #16,600 V, EPR Insulation
						2105	1-3/C + gnd #2,600 V, EPR Insulation
						2106	1-3/C + gnd #2,600 V, EPR Insulation
						2202-4	1-3/C #14,600 V, EPR Insulation
						~~2104~~ (9)	~~1-3/C + gnd #2,600 V, EPR Insulation~~
						~~2204-1~~	~~1-3/C #14, 600 V, EPR Insulation~~
						UP204-7	1-2/C + gnd #8,600 V, EPR Insulation
						2119-A	1-3/C + gnd 250 Kcmil,600 V, EPR Insulation
						2201-2	1-2/C + gnd #10,600 V, EPR Insulation
						2123-2	1-3/C + gnd #2/0,600 V, EPR Insulation
						2123-3	1-3/C + gnd #2/0,600 V, EPR Insulation
						1118	1-3/C + gnd #2/0,600 V, EPR Insulation
						2095	1-3/C + gnd #2,600 V, EPR Insulation
						2096	1-3/C + gnd #2,600 V, EPR Insulation
						2097	1-3/C + gnd #2,600 V, EPR Insulation
						2098	1-3/C + gnd #2,600 V, EPR Insulation
						2099	1-3/C + gnd #2,600 V, EPR Insulation
						S-3053-1	1-3/C + gnd #2,600 V, EPR Insulation
						~~2107~~ (9)	~~1-3/C + gnd #2,600 V, EPR Insulation~~
						~~2201-6~~	~~1-2/C + gnd #10,600 V, EPR Insulation~~
						1201-1	1-2/C + gnd #10,600 V, EPR Insulation
						2202-1	1-2/C + gnd #10,600 V, EPR Insulation
						1201-2	1-2/C + gnd #10,600 V, EPR Insulation
						1201-6	1-2/C + gnd #10,600 V, EPR Insulation
						2204-2	1-3/C #16,600 V, EPR Insulation
						Pull rope	Soft-Fiber Polyester
						A-3041-1	1-3/C + gnd #2,600 V, EPR Insulation
						S-3052-1	1-3/C + gnd #2,600 V, EPR Insulation
						2125	1-3/C + gnd 250 Kcmil,600 V, EPR Insulation
						2103	1-3/C + gnd #2,600 V, EPR Insulation
						S-3056-9	1-4/C #14,600 V, EPR Insulation
						S-3056-6	1-4/C #14,600 V, EPR Insulation
						2202-3A	1-2/C #14, 600 V, EPR Insulation
						2201-4B	1-2/C #14, 600 V, EPR Insulation
						2201-4C	1-2/C #14, 600 V, EPR Insulation
						1201-4A	1-2/C #14, 600 V, EPR Insulation
						1201-4B	1-2/C #14, 600 V, EPR Insulation
						1201-4C	1-2/C #14, 600 V, EPR Insulation

CONDUIT DATA

Conduit No	Reference	Size	Type	Total Fill (mm²)	Allowable Fill (mm²)	Included Cable No.	Conductor Type
						LP219-2,4	1-3/C + gnd #6,600 V, EPR Insulation
						LP219-6,8	1-3/C + gnd #6,600 V, EPR Insulation
						LP220-2,4	1-3/C + gnd #6,600 V, EPR Insulation
						LP220-6,8	1-3/C + gnd #6,600 V, EPR Insulation
						LP221-2,4	1-3/C + gnd #6,600 V, EPR Insulation
						LP221-6,8	1-3/C + gnd #6,600 V, EPR Insulation
						LP222-2,4	1-3/C + gnd #6,600 V, EPR Insulation
						LP222-6,8	1-3/C + gnd #6,600 V, EPR Insulation
						LP223-2,4	1-3/C + gnd #6,600 V, EPR Insulation
						LP223-6,8	1-3/C + gnd #6,600 V, EPR Insulation

For continuation, see next sheet.

CONDUIT AND TRAY SCHEDULE

E-418

REVISED BY | DATE REVISED | DATE 8/02 | 8/02 | PBP | AB
CALCULATED/DESIGNED BY | CHECKED BY
DESIGN OVERSIGHT
BEHZAD GOLEMOHAMMADI
STATE OF CALIFORNIA - DEPARTMENT OF TRANSPORTATION
Caltrans

LAST REVISION 12-21-11 | DATE PLOTTED => 12-APR-2013 | TIME PLOTTED => 11:32

FOR REDUCED PLANS ORIGINAL SCALE IS IN MILLIMETERS 0 20 40 60 80
DGN FILE =>04-0120f1_0373R09.dgn
USERNAME =>Liorico
CU 04251
EA 0120F1

CONDUIT DATA

Conduit No	Reference	Size	Type	Total Fill (mm^2)	Allowable Fill (mm^2)	Included Cable No.	Conductor Type
2T27	E-118, E-184	610	152.4 mm siderail ladder tray	2369.55	18064.48	LP222-6,8	1-3/C + gnd #6,600 V, EPR Insulation
						2098	1-3/C + gnd #2,600 V, EPR Insulation
						2106	1-3/C + gnd #2,600 V, EPR Insulation
						UP207-8	1-2/C + gnd #8,600 V, EPR Insulation
						UP207-7	1-2/C + gnd #8,600 V, EPR Insulation
						Pull rope	Soft-Fiber Polyester
						LP222-2,4	1-3/C + gnd #6,600 V, EPR Insulation
						UP207-1	1-2/C + gnd #10,600 V, EPR Insulation
						UP207-11	1-2/C + gnd #8,600 V, EPR Insulation
2T28	E-119, E-185	610	152.4 mm siderail ladder tray	2833.85	18064.48		
						UP208-6	1-2/C + gnd #8,600 V, EPR Insulation
						Pull rope	Soft-Fiber Polyester
						LP223-2,4	1-3/C + gnd #6,600 V, EPR Insulation
						UP208-7	1-2/C + gnd #8,600 V, EPR Insulation
						2107	1-3/C + gnd #2,600 V, EPR Insulation
						LP223-6,8	1-3/C + gnd #6,600 V, EPR Insulation
						2201-5	1-3/C #14,600 V, EPR Insulation
						UP208-8	1-2/C + gnd #8,600 V, EPR Insulation
						2201-6	1-2/C + gnd #10, 600 V, EPR Insulation
						S-3056-9	1-4/C #14,600 V, EPR Insulation
						2099	1-3/C + gnd #2,600 V, EPR Insulation
						2201-2	1-2/C + gnd #10,600 V, EPR Insulation
						2201-4B	1-2/C #14,600 V, EPR Insulation
						2201-4C	1-2/C #14,600 V, EPR Insulation
2T29	E-212, E-21B	610	152.4 mm siderail ladder tray	15115.43 (8)	18064.48	2123-3	1-3/C + gnd #2/0,600 V, EPR Insulation
						Pull rope	Soft-Fiber Polyester
						2119-A	1-3/C + gnd 250 kcmil,600 V, EPR Insulation (8)
						A-3004-1	1-3/C + gnd #2,600 V, EPR Insulation
						A-3003-1	1-3/C + gnd #4,600 V, EPR Insulation
						A-2012-1	1-3/C + gnd #2,600 V, EPR Insulation
						2123	1-3/C + gnd #2,600 V, EPR Insulation
						2105	1-3/C + gnd #2,600 V, EPR Insulation
						2104	1-3/C + gnd #2,600 V, EPR Insulation
						2125	1-3/C + gnd 250 kcmil,600 V, EPR Insulation
						2123-2	1-3/C + gnd #2/0,600 V, EPR Insulation
						2106	1-3/C + gnd #2,600 V, EPR Insulation
						1118	1-3/C + gnd #2/0,600 V, EPR Insulation
						2095	1-3/C + gnd #2,600 V, EPR Insulation
						2096	1-3/C + gnd #2,600 V, EPR Insulation
						2097	1-3/C + gnd #2,600 V, EPR Insulation
						2098	1-3/C + gnd #2,600 V, EPR Insulation
						2099	1-3/C + gnd #2,600 V, EPR Insulation
						2103	1-3/C + gnd #2,600 V, EPR Insulation
						2107	1-3/C + gnd #2,600 V, EPR Insulation
						A-3041-1	1-3/C + gnd #2,600 V, EPR Insulation
						S-3053-1	1-3/C + gnd #2,600 V, EPR Insulation
						S-3052-1	1-3/C + gnd #2,600 V, EPR Insulation (8)
						A-2013-1	1-3/C + gnd #2,600 V, EPR Insulation
2T33	E-114B	760	152.4 mm siderail ladder tray	17199.66 (8)	22580.60	A-2011-1	1-3/C + gnd #2,600 V, EPR Insulation
						UP208-2A	1-2/C + gnd #8,600 V, EPR Insulation
						UP208-4A	1-2/C + gnd #8,600 V, EPR Insulation
						UP208-6	1-2/C + gnd #8,600 V, EPR Insulation
						Pull rope	Soft-Fiber Polyester (8)
						2121	1-3/C + gnd #1/0,600 V, EPR Insulation
						2120	1-3/C + gnd #1/0,600 V, EPR Insulation
						A-3057-1	1-3/C + gnd #2,600 V, EPR Insulation
						A-2014-1	1-3/C + gnd #2,600 V, EPR Insulation
						UP204-8	1-2/C + gnd #8,600 V, EPR Insulation
						UP205-8	1-2/C + gnd #8,600 V, EPR Insulation
						UP207-8	1-2/C + gnd #8,600 V, EPR Insulation
						UP205-1	1-2/C + gnd #10,600 V, EPR Insulation
						UP207-7	1-2/C + gnd #8,600 V, EPR Insulation
						A-3039-3	1-3/C + gnd #6,600 V, EPR Insulation
						A-3040-3	1-3/C + gnd #6,600 V, EPR Insulation
						A-3005-1	1-3/C + gnd #2,600 V, EPR Insulation
						A-3006-1	1-3/C + gnd #4,600 V, EPR Insulation
						A-3031-1	1-3/C + gnd #4,600 V, EPR Insulation

THIS PLAN ACCURATE FOR ELECTRICAL WORK ONLY.

REQUEST FOR INFORMATION NOT ADDRESSED IN THIS CCO REMAIN IN FORCE

MARK	DATE	DESCRIPTIONS	BY	CH'D	CCO#
8	12/21/11	ELECTRICAL CHANGE FOR ELEVATION 53 IMPROVEMENTS	TW	RG	190
7	03/24/11	BIKE PATH CONDUIT	TW	RG	73
6	01/07/11	ELECTRICAL WARNING SYSTEMS	TW	RG	61
5	06/11/10	BIKE PATH CONDUIT	TW	RG	73
4	02/01/10	DEHUMIDIFIER SCADA INTERFACE	RR	RG FW	130
3	03/30/09	SERVICE PLATFORM ELECTRICAL CHANGES	RY RR	RG MP	55
2	02/25/08	CABLE TRAY CHANGES	TW	RG	42S1
1	03/04/08	BARRIER MODIFICATIONS	JS BM	RG SE	44

REVISIONS

CONTRACT CHANGE ORDER NO. 190
SHEET 23 OF 37

DIST	COUNTY	ROUTE	KILOMETER POST TOTAL PROJECT	SHEET No	TOTAL SHEETS
04	SF	80	13.2/13.9	374 R8	1204

12/19/02
REGISTERED ELECTRICAL ENGINEER DATE

12-6-04
PLANS APPROVAL DATE

PB POWER, Inc.
A Parsons Brinckerhoff Company
303 Second St., Suite 700N
San Francisco, CA 94107-1317

The State of California or its officers or agents shall not be responsible for the accuracy or completeness of electronic copies of this plan sheet.

Caltrans now has a web site! To get to the web site, go to: http://www.dot.ca.gov

REGISTERED PROFESSIONAL ENGINEER — JENS ERLINGSSON No. 8249 Exp. 9/30/06 ELECTRICAL — STATE OF CALIFORNIA

REGISTERED PROFESSIONAL ENGINEER — SYN YEE CHIN No. 18166 Exp. 09/30/2011 ELECTRICAL — STATE OF CALIFORNIA

FOR REVISION ONLY 5 6 7

REGISTERED PROFESSIONAL ENGINEER — FADI WALIEDDINE No. 11465 Exp. 12/31/2011 ELECTRICAL — STATE OF CALIFORNIA

REGISTERED PROFESSIONAL ENGINEER — S. A. ESTOQUE, JR No. E-10151 Exp. 12/31/2009 ELECTRICAL — STATE OF CALIFORNIA

REGISTERED PROFESSIONAL ENGINEER — DAVID H. OTO No. 10699 Exp. 06/30/2013 ELECTRICAL — STATE OF CALIFORNIA

FOR REVISION ONLY 8

FOR REVISION ONLY 3 4

FOR REVISION ONLY 1 2

CONDUIT DATA

Conduit No	Reference	Size	Type	Total Fill (mm^2)	Allowable Fill (mm^2)	Included Cable No.	Conductor Type
						A-3032-1	1-3/C + gnd #4,600 V, EPR Insulation
						A-3039-1	1-3/C + gnd #2,600 V, EPR Insulation
						A-3040-1	1-3/C + gnd #2,600 V, EPR Insulation
						UP204-1	1-2/C + gnd #10,600 V, EPR Insulation
						UP206-8	1-2/C + gnd #8,600 V, EPR Insulation
						S-2032-1	1-3/C + gnd #4,600 V, EPR Insulation
						A-3036-1	1-3/C + gnd #4,600 V, EPR Insulation
						A-2035-1	1-3/C + gnd #6,600 V, EPR Insulation
						A-2035-3	1-3/C + gnd #6,600 V, EPR Insulation
						UP205-7	1-2/C + gnd #8,600 V, EPR Insulation
						UP206-7	1-2/C + gnd #8,600 V, EPR Insulation
						A-3035-1	1-3/C + gnd #4,600 V, EPR Insulation
						A-3034-1	1-3/C + gnd #2,600 V, EPR Insulation
						UP207-1	1-2/C + gnd #10,600 V, EPR Insulation
						S-2031-1	1-3/C + gnd #2,600 V, EPR Insulation
						UP206-1	1-2/C + gnd #10,600 V, EPR Insulation
						1201-2	1-2/C + gnd #10,600 V, EPR Insulation
						UP208-7	1-2/C + gnd #8,600 V, EPR Insulation
						1201-6	1-2/C + gnd #10,600 V, EPR Insulation
						A-3043-1	1-3/C + gnd #2,600 V, EPR Insulation
						A-3042-1	1-3/C + gnd #2,600 V, EPR Insulation
						2119-B	1-3/C + gnd 250 kcmil,600 V, EPR Insulation
						A-3033-1	1-3/C + gnd #2,600 V, EPR Insulation
						UP208-8	1-2/C + gnd #8,600 V, EPR Insulation
2T39	E-212, E-21	610	152.4 mm siderail ladder tray	11397.53 (8)	18064.48	A-3032-1	1-3/C + gnd #4,600 V, EPR Insulation
						2119-B	1-3/C + gnd 250 kcmil,600 V, EPR Insulation
						A-2035-1	1-3/C + gnd #6,600 V, EPR Insulation
						S-2032-1	1-3/C + gnd #4,600 V, EPR Insulation
						S-2031-1	1-3/C + gnd #2,600 V, EPR Insulation
						A-3036-1	1-3/C + gnd #4,600 V, EPR Insulation
						A-3035-1	1-3/C + gnd #4,600 V, EPR Insulation
						A-3034-1	1-3/C + gnd #2,600 V, EPR Insulation
						A-3033-1	1-3/C + gnd #2,600 V, EPR Insulation
						Pull rope	Soft-Fiber Polyester
						A-3039-1	1-3/C + gnd #2,600 V, EPR Insulation
						A-3042-1	1-3/C + gnd #2,600 V, EPR Insulation
						A-3031-1	1-3/C + gnd #4,600 V, EPR Insulation
						A-3006-1	1-3/C + gnd #4,600 V, EPR Insulation
						A-3005-1	1-3/C + gnd #2,600 V, EPR Insulation
						A-2014-1	1-3/C + gnd #2,600 V, EPR Insulation
						A-2011-1	1-3/C + gnd #2,600 V, EPR Insulation
						A-3057-1	1-3/C + gnd #2,600 V, EPR Insulation
						A-3043-1	1-3/C + gnd #2,600 V, EPR Insulation
						A-3040-1	1-3/C + gnd #2,600 V, EPR Insulation (8)
						2121	1-3/C + gnd #1/0,600 V, EPR Insulation
						2120	1-3/C + gnd #1/0,600 V, EPR Insulation

For continuation, see next sheet.

CONDUIT AND TRAY SCHEDULE

E-419

STATE OF CALIFORNIA - DEPARTMENT OF TRANSPORTATION

DESIGN OVERSIGHT: BEHZAD GOLEMOHAMMADI

CALCULATED/DESIGNED BY: PBP 8/02 — CHECKED BY: AB 8/02 — REVISED BY / DATE REVISED

FOR REDUCED PLANS ORIGINAL SCALE IS IN MILLIMETERS — 0 20 40 60 80

DGN FILE => 04-0120f1_0374R08.dgn
USERNAME => llorico

CU 04251 — EA 0120F1

LAST REVISION 12-21-11 — DATE PLOTTED => 20-DEC-2011 — TIME PLOTTED => 17:13

DIST	COUNTY	ROUTE	KILOMETER POST TOTAL PROJECT	SHEET No	TOTAL SHEETS
04	SF	80	13.2/13.9	379 R4	1204

REGISTERED ELECTRICAL ENGINEER 12/19/02 DATE

12-6-04
PLANS APPROVAL DATE

PB POWER, Inc.
A Parsons Brinckerhoff Company
303 Second St., Suite 700N
San Francisco, CA 94107-1317

REGISTERED PROFESSIONAL ENGINEER JENS ERLINGSSON No. 8249 Exp. 9/30/06 ELECTRICAL STATE OF CALIFORNIA

The State of California or its officers or agents shall not be responsible for the accuracy or completeness of electronic copies of this plan sheet.

Caltrans now has a web site! To get to the web site, go to: http://www.dot.ca.gov

REQUEST FOR INFORMATION NOT ADDRESSED IN THIS CCO REMAIN IN FORCE

MARK	DATE	DESCRIPTIONS	BY	CH'D	CCO#
4	12/21/11	ELECTRICAL CHANGE FOR ELEVATION 53 IMPROVEMENTS	TW	RG	190
3	02/18/11	CABLE ELECTRICAL-LED AVIATION LIGHTS	TW	RG	72S1
2	09/24/08	CABLE ELECTRICAL	RR AG	RG SE	72
1	02/19/08	ELECTRICAL MODIFICATIONS	MP EL	RR	42

REVISIONS

CONTRACT CHANGE ORDER NO. 190
SHEET 24 OF 37

REGISTERED PROFESSIONAL ENGINEER DAVID H. OTO No. 10699 Exp. 06/30/2013 ELECTRICAL STATE OF CALIFORNIA
FOR REVISION ONLY 4

REGISTERED PROFESSIONAL ENGINEER SYN YEE CHIN No. 18186 Exp. 09/30/2011 ELECTRICAL STATE OF CALIFORNIA
FOR REVISION ONLY 3

REGISTERED PROFESSIONAL ENGINEER S. A. ESTOQUE, JR. No. E-10151 Exp. 12/31/2008 ELECTRICAL STATE OF CALIFORNIA
FOR REVISION ONLY 1 2

CONDUIT DATA

Conduit No	Reference	Size	Type	Total Fill (mm²)	Allowable Fill (mm²)	Included Cable No.	Conductor Type
3163	E-229	41	Liquidtight flexible metal	425.70	511.11	Pull rope	Soft-Fiber Polyester
			conduit			A-3013-2	3 + 1 gnd #6,#8, 600 V, RHH/RHW Insulation
						A-3012-2	3 + 1 gnd #6,#8, 600 V, RHH/RHW Insulation
3164	E-228, E-229	41	Liquidtight flexible metal	425.70	511.11	A-3012-2	3 + 1 gnd #6,#8, 600 V, RHH/RHW Insulation
			conduit			A-3013-2	3 + 1 gnd #6,#8, 600 V, RHH/RHW Insulation
						Pull rope	Soft-Fiber Polyester
3165	E-228	41	Liquidtight flexible metal	425.70	511.11	A-3013-2	3 + 1 gnd #6,#8, 600 V, RHH/RHW Insulation
			conduit			Pull rope	Soft-Fiber Polyester
						A-3012-2	3 + 1 gnd #6,#8, 600 V, RHH/RHW Insulation
3166	E-228	41	Liquidtight flexible metal	425.70	511.11	A-3013-2	3 + 1 gnd #6,#8, 600 V, RHH/RHW Insulation
			conduit			Pull rope	Soft-Fiber Polyester
						A-3012-2	3 + 1 gnd #6,#8, 600 V, RHH/RHW Insulation
3167	E-228	41	Liquidtight flexible metal	425.70	511.11	Pull rope	Soft-Fiber Polyester
			conduit			A-3012-2	3 + 1 gnd #6,#8, 600 V, RHH/RHW Insulation
						A-3013-2	3 + 1 gnd #6,#8, 600 V, RHH/RHW Insulation
3168	E-228	41	Liquidtight flexible metal	212.85	511.11	A-3012-2	3 + 1 gnd #6,#8, 600 V, RHH/RHW Insulation
		.	conduit			Pull rope	Soft-Fiber Polyester
3169	E-228	41	Liquidtight flexible metal	212.85	511.11	Pull rope	Soft-Fiber Polyester
			conduit			A-3012-2	3 + 1 gnd #6,#8, 600 V, RHH/RHW Insulation
3170	E-228	41	Liquidtight flexible metal	212.85	511.11	Pull rope	Soft-Fiber Polyester
			conduit			A-3012-2	3 + 1 gnd #6,#8, 600 V, RHH/RHW Insulation
3171	E-228	41	Liquidtight flexible metal	212.85	511.11	A-3012-2	3 + 1 gnd #6,#8, 600 V, RHH/RHW Insulation
			conduit			Pull rope	Soft-Fiber Polyester
3172	E-228	41	Liquidtight flexible metal	212.85	511.11	A-3012-2	3 + 1 gnd #6,#8, 600 V, RHH/RHW Insulation
			conduit			Pull rope	Soft-Fiber Polyester
3173	E-228	41	Liquidtight flexible metal	212.85	511.11	Pull rope	Soft-Fiber Polyester
			conduit			A-3012-2	3 + 1 gnd #6,#8, 600 V, RHH/RHW Insulation
3174	E-228	41	Liquidtight flexible metal	212.85	511.11	A-3012-2	3 + 1 gnd #6,#8, 600 V, RHH/RHW Insulation
			conduit			Pull rope	Soft-Fiber Polyester
3175	E-227, E-228	41	Liquidtight flexible metal	212.85	511.11	Pull rope	Soft-Fiber Polyester
			conduit			A-3012-2	3 + 1 gnd #6,#8, 600 V, RHH/RHW Insulation
3176	E-227	41	Liquidtight flexible metal	212.85	511.11	Pull rope	Soft-Fiber Polyester
			conduit			A-3012-2	3 + 1 gnd #6,#8, 600 V, RHH/RHW Insulation
3177	E-264 4	78	RGS-PVC coated conduit	754.18	2564.19	2119-B-1	1-3/C + gnd #1/0, 600 V, EPR Insulation 4
3177C	E-265	78	RGS-PVC coated conduit	754.18	2564.19	2119-B-1	1-3/C + gnd #1/0, 600 V, EPR Insulation
3201	E-226	41	Liquidtight flexible metal	271.47	511.11	Pull rope	Soft-Fiber Polyester
			conduit			S-3056-12	2-1/C #14, 600 V, EPR Insulation
						S-3051-2	3 + 1 gnd #6,#8, 600 V, RHH/RHW Insulation
						S-3056-13	2-1/C #14, 600 V, EPR Insulation
3202	E-226	41	Liquidtight flexible metal	271.47	511.11	S-3056-12	2-1/C #14, 600 V, EPR Insulation
			conduit			S-3056-13	2-1/C #14, 600 V, EPR Insulation
						Pull rope	Soft-Fiber Polyester
						S-3051-2	3 + 1 gnd #6,#8, 600 V, RHH/RHW Insulation
3203	E-226	41	Liquidtight flexible metal	271.47	511.11	S-3056-13	2-1/C #14, 600 V, EPR Insulation
			conduit			S-3051-2	3 + 1 gnd #6,#8, 600 V, RHH/RHW Insulation
						S-3056-12	2-1/C #14, 600 V, EPR Insulation
						Pull rope	Soft-Fiber Polyester
3204	E-226, E-227	41	Liquidtight flexible metal	455.01	511.11	S-3051-2	3 + 1 gnd #6,#8, 600 V, RHH/RHW Insulation
			conduit			Pull rope	Soft-Fiber Polyester
						S-3056-12	2-1/C #14, 600 V, EPR Insulation
						S-3056-3	3 + 1 gnd #6,#8, 600 V, RHH/RHW Insulation
3205	E-227	41	Liquidtight flexible metal	455.01	511.11	S-3056-12	2-1/C #14, 600 V, EPR Insulation
			conduit			Pull rope	Soft-Fiber Polyester
						S-3056-3	3 + 1 gnd #6,#8, 600 V, RHH/RHW Insulation
						S-3051-2	3 + 1 gnd #6,#8, 600 V, RHH/RHW Insulation

CONDUIT DATA

Conduit No	Reference	Size	Type	Total Fill (mm²)	Allowable Fill (mm²)	Included Cable No.	Conductor Type
3206	E-227	41	Liquidtight flexible metal	425.70	511.11	Pull rope	Soft-Fiber Polyester
			conduit			S-3056-3	3 + 1 gnd #6,#8, 600 V, RHH/RHW Insulation
						S-3051-2	3 + 1 gnd #6,#8, 600 V, RHH/RHW Insulation
3207	E-181, E-135	41	RGS-PVC coated conduit	271.47	534.55	S-3051-2	3 + 1 gnd #6,#8, 600 V, RHH/RHW Insulation
						Pull rope	Soft-Fiber Polyester
						S-3056-13	2-1/C #14, 600 V, EPR Insulation
						S-3056-12	2-1/C #14, 600 V, EPR Insulation
3208	E-181	41	RGS-PVC coated conduit	464.20	534.55	S-3051-1	1-3/C + gnd #4 ,600 V, EPR Insulation
						Pull rope	Soft-Fiber Polyester
						S-3056-6	1-4/C #14,600 V, EPR Insulation
3209	E-181	41	RGS-PVC coated conduit	527.18	534.55	Pull rope	Soft-Fiber Polyester
						A-3041-1	1-3/C + gnd #2,600 V, EPR Insulation
3210	E-181, E-135	41	RGS-PVC coated conduit	212.85	534.55	Pull rope	Soft-Fiber Polyester
						A-3041-2	3 + 1 gnd #6,#8, 600 V, RHH/RHW Insulation
3211	E-226	41	Liquidtight flexible metal	212.85	511.11	Pull rope	Soft-Fiber Polyester
			conduit			A-3041-2	3 + 1 gnd #6,#8, 600 V, RHH/RHW Insulation
3212	E-226	41	Liquidtight flexible metal	212.85	511.11	A-3041-2	3 + 1 gnd #6,#8, 600 V, RHH/RHW Insulation
			conduit			Pull rope	Soft-Fiber Polyester
3213	E-226	41	Liquidtight flexible metal	212.85	511.11	A-3041-2	3 + 1 gnd #6,#8, 600 V, RHH/RHW Insulation
			conduit			Pull rope	Soft-Fiber Polyester
3214	E-226	41	Liquidtight flexible metal	212.85	511.11	A-3041-2	3 + 1 gnd #6,#8, 600 V, RHH/RHW Insulation
			conduit			Pull rope	Soft-Fiber Polyester
3215	E-226	41	Liquidtight flexible metal	212.85	511.11	A-3041-2	3 + 1 gnd #6,#8, 600 V, RHH/RHW Insulation
			conduit			Pull rope	Soft-Fiber Polyester
3216	E-226	41	Liquidtight flexible metal	212.85	511.11	A-3041-2	3 + 1 gnd #6,#8, 600 V, RHH/RHW Insulation
			conduit			Pull rope	Soft-Fiber Polyester
3217	E-226	41	Liquidtight flexible metal	212.85	511.11	A-3041-2	3 + 1 gnd #6,#8, 600 V, RHH/RHW Insulation
			conduit			Pull rope	Soft-Fiber Polyester
3218	E-226,E-227	41	Liquidtight flexible metal	212.85	511.11	A-3041-2	3 + 1 gnd #6,#8, 600 V, RHH/RHW Insulation
			conduit			Pull rope	Soft-Fiber Polyester
3219	E-227	41	Liquidtight flexible metal	212.85	511.11	Pull rope	Soft-Fiber Polyester
			conduit			A-3041-2	3 + 1 gnd #6,#8, 600 V, RHH/RHW Insulation
3220	E-227	41	Liquidtight flexible metal	212.85	511.11	A-3041-2	3 + 1 gnd #6,#8, 600 V, RHH/RHW Insulation
			conduit			Pull rope	Soft-Fiber Polyester
3221	E-227	41	Liquidtight flexible metal	212.85	511.11	A-3041-2	3 + 1 gnd #6,#8, 600 V, RHH/RHW Insulation
			conduit			Pull rope	Soft-Fiber Polyester

For continuation, see next sheet.

CONDUIT AND TRAY SCHEDULE

E-424

REVISED BY | DATE REVISED | DATE 8/02 | 8/02 | PBP | AB | CALCULATED/DESIGNED BY | CHECKED BY | DESIGN OVERSIGHT | BEHZAD GOLEMOHAMMADI

STATE OF CALIFORNIA - DEPARTMENT OF TRANSPORTATION

LAST REVISION 12-21-11 | DATE PLOTTED => 20-DEC-2011 | TIME PLOTTED => 17:13

FOR REDUCED PLANS ORIGINAL SCALE IS IN MILLIMETERS 0 20 40 60 80

DGN FILE =>04-0120f1_0379R04.dgn
USERNAME =>llorico

CU 04251 | EA 0120F1

DIST	COUNTY	ROUTE	KILOMETER POST TOTAL PROJECT	SHEET No	TOTAL SHEETS
04	SF	80	13.2/13.9	381 R6	1204

REGISTERED ELECTRICAL ENGINEER 12/19/02 DATE

12-6-04
PLANS APPROVAL DATE

REGISTERED PROFESSIONAL ENGINEER JENS ERLINGSSON No. 8249 Exp. 9/30/06 ELECTRICAL STATE OF CALIFORNIA

PB POWER, Inc.
A Parsons Brinckerhoff Company
303 Second St., Suite 700N
San Francisco, CA 94107-1317

The State of California or its officers or agents shall not be responsible for the accuracy or completeness of electronic copies of this plan sheet.

Caltrans now has a web site! To get to the web site, go to http://www.dot.ca.gov

Caltrans Metric

REQUEST FOR INFORMATION NOT ADDRESSED IN THIS CCO REMAIN IN FORCE

MARK	DATE	DESCRIPTIONS	BY	CH'D	CCO#
6	12/21/11	ELECTRICAL CHANGE FOR ELEVATION 53 IMPROVEMENTS	TW	RG	190
5	03/26/10	DEHUMIDIFIER SCADA INTERFACE	RR	RG FW	130
4	12/23/09	TOWER BASE MEP	TW RR	RG FW	79
3	09/18/09	TOWER UTILITY PANELS	TW	RG FW	70
2	09/24/08	CABLE ELECTRICAL	RR AG	RG SE	72
1	02/19/08	ELECTRICAL MODIFICATIONS	MP EL	RR	42

REVISIONS

CONTRACT CHANGE ORDER NO. 190
SHEET 25 OF 37

REGISTERED PROFESSIONAL ENGINEER DAVID H. OTO No. 10699 Exp. 06/30/2013 ELECTRICAL STATE OF CALIFORNIA 6
FOR REVISION ONLY

REGISTERED PROFESSIONAL ENGINEER SYN YEE CHIN No. 18186 Exp. 09/30/2011 ELECTRICAL STATE OF CALIFORNIA 5
FOR REVISION ONLY

REGISTERED PROFESSIONAL ENGINEER FADI WALIEDDINE No. 11465 Exp. 12/31/2009 ELECTRICAL STATE OF CALIFORNIA 3 4
FOR REVISION ONLY

REGISTERED PROFESSIONAL ENGINEER S. A. ESTOQUE, JR. No. E-10151 Exp. 12/31/2008 ELECTRICAL STATE OF CALIFORNIA 2
FOR REVISION ONLY

REGISTERED PROFESSIONAL ENGINEER MAXWELL FUNTO TAKAKI No. E 8651 Exp. 9/30/2010 ELECTRICAL STATE OF CALIFORNIA 1
FOR REVISION ONLY

CONDUIT DATA

Conduit No.	Reference	Size	Type	Total Fill (mm²)	Allowable Fill (mm²)	Included Cable No.	Conductor Type
3256	E-229	41	Liquidtight flexible metal conduit	425.70	511.11	A-3042-2	3 + 1 gnd #6,#8, 600 V, RHH/RHW Insulation
						A-3043-2	3 + 1 gnd #6,#8, 600 V, RHH/RHW Insulation
						Pull rope	Soft-Fiber Polyester
3257	E-229	41	Liquidtight flexible metal conduit	425.70	511.11	A-3043-2	3 + 1 gnd #6,#8, 600 V, RHH/RHW Insulation
						Pull rope	Soft-Fiber Polyester
						A-3042-2	3 + 1 gnd #6,#8, 600 V, RHH/RHW Insulation
3258	E-229	41	Liquidtight flexible metal conduit	425.70	511.11	A-3042-2	3 + 1 gnd #6,#8, 600 V, RHH/RHW Insulation
						A-3043-2	3 + 1 gnd #6,#8, 600 V, RHH/RHW Insulation
						Pull rope	Soft-Fiber Polyester
3259	E-229	41	Liquidtight flexible metal conduit	425.70	511.11	A-3042-2	3 + 1 gnd #6,#8, 600 V, RHH/RHW Insulation
						A-3043-2	3 + 1 gnd #6,#8, 600 V, RHH/RHW Insulation
						Pull rope	Soft-Fiber Polyester
3260	E-229	41	Liquidtight flexible metal conduit	425.70	511.11	A-3042-2	3 + 1 gnd #6,#8, 600 V, RHH/RHW Insulation
						A-3043-2	3 + 1 gnd #6,#8, 600 V, RHH/RHW Insulation
						Pull rope	Soft-Fiber Polyester
3261	E-229	41	Liquidtight flexible metal conduit	425.70	511.11	A-3042-2	3 + 1 gnd #6,#8, 600 V, RHH/RHW Insulation
						A-3043-2	3 + 1 gnd #6,#8, 600 V, RHH/RHW Insulation
						Pull rope	Soft-Fiber Polyester
3262	E-229	41	Liquidtight flexible metal conduit	425.70	511.11	A-3043-2	3 + 1 gnd #6,#8, 600 V, RHH/RHW Insulation
						A-3042-2	3 + 1 gnd #6,#8, 600 V, RHH/RHW Insulation
						Pull rope	Soft-Fiber Polyester
3263	E-229	41	Liquidtight flexible metal conduit	425.70	511.11	A-3042-2	3 + 1 gnd #6,#8, 600 V, RHH/RHW Insulation
						Pull rope	Soft-Fiber Polyester
						A-3043-2	3 + 1 gnd #6,#8, 600 V, RHH/RHW Insulation
3264	E-228, E-229	41	Liquidtight flexible metal conduit	425.70	511.11	A-3042-2	3 + 1 gnd #6,#8, 600 V, RHH/RHW Insulation
						A-3043-2	3 + 1 gnd #6,#8, 600 V, RHH/RHW Insulation
						Pull rope	Soft-Fiber Polyester
3265	E-228	41	Liquidtight flexible metal conduit	425.70	511.11	A-3043-2	3 + 1 gnd #6,#8, 600 V, RHH/RHW Insulation
						Pull rope	Soft-Fiber Polyester
						A-3042-2	3 + 1 gnd #6,#8, 600 V, RHH/RHW Insulation
3266	E-228	41	Liquidtight flexible metal conduit	425.70	511.11	A-3043-2	3 + 1 gnd #6,#8, 600 V, RHH/RHW Insulation
						Pull rope	Soft-Fiber Polyester
						A-3042-2	3 + 1gnd #6,#8, 600 V, RHH/RHW Insulation
3267	E-228	41	Liquidtight flexible metal conduit	425.70	511.11	A-3042-2	3 + 1gnd #6,#8, 600 V, RHH/RHW Insulation
						A-3043-2	3 + 1 gnd #6,#8, 600 V, RHH/RHW Insulation
						Pull rope	Soft-Fiber Polyester
3268	E-228	41	Liquidtight flexible metal conduit	212.85	511.11	Pull rope	Soft-Fiber Polyester
						A-3042-2	3 + 1 gnd #6,#8, 600 V, RHH/RHW Insulation
3269	E-228	41	Liquidtight flexible metal conduit	212.85	511.11	A-3042-2	3 + 1 gnd #6,#8, 600 V, RHH/RHW Insulation
						Pull rope	Soft-Fiber Polyester
3270	E-228	41	Liquidtight flexible metal conduit	212.85	511.11	A-3042-2	3 + 1 gnd #6,#8, 600 V, RHH/RHW Insulation
						Pull rope	Soft-Fiber Polyester
3271	E-228	41	Liquidtight flexible metal conduit	212.85	511.11	A-3042-2	3 + 1 gnd #6,#8, 600 V, RHH/RHW Insulation
						Pull rope	Soft-Fiber Polyester
3272	E-228	41	Liquidtight flexible metal conduit	212.85	511.11	Pull rope	Soft-Fiber Polyester
						A-3042-2	3 + 1 gnd #6,#8, 600 V, RHH/RHW Insulation
3273	E-228	41	Liquidtight flexible metal conduit	212.85	511.11	A-3042-2	3 + 1 gnd #6,#8, 600 V, RHH/RHW Insulation
						Pull rope	Soft-Fiber Polyester
3274	E-228	41	Liquidtight flexible metal conduit	212.85	511.11	A-3042-2	3 + 1 gnd #6,#8, 600 V, RHH/RHW Insulation
						Pull rope	Soft-Fiber Polyester
3275	E-227, E-228	41	Liquidtight flexible metal conduit	212.85	511.11	A-3042-2	3 + 1gnd #6,#8, 600 V, RHH/RHW Insulation
						Pull rope	Soft-Fiber Polyester
3276	E-227	41	Liquidtight flexible metal conduit	212.85	511.11	A-3042-2	3 + 1 gnd #6,#8, 600 V, RHH/RHW Insulation
						Pull rope	Soft-Fiber Polyester
~~3277~~							
3277A	E-265	27	RGS-PVC coated conduit	121.74	229.03	2119-2	4 pair #22, shielded pairs, 300 V, PE Insulation

CONDUIT DATA

Conduit No.	Reference	Size	Type	Total Fill (mm²)	Allowable Fill (mm²)	Included Cable No.	Conductor Type
~~3278~~							6
3281	E-231	53	RGS-PVC coated conduit	527.18	879.42	A-3057-1	1-3/C + gnd #2,600V, RHH/RHW Insulation
3281A	E-264	53	RGS-PVC coated conduit	527.18	879.42	A-3057-1	1-3/C + gnd #2, 600V, RHH/RHW Insulation
3282	E-231	41	RGS-PVC coated conduit	425.70	534.55	A-3057-4	3 + 1 gnd #6,#8, 600 V, RHH/RHW Insulation
						A-3057-3	3 + 1 gnd #6,#8, 600 V, RHH/RHW Insulation
						Pull rope	Soft-Fiber Polyester
3283	E-231	41	RGS-PVC coated conduit	212.85	534.55	Pull rope	Soft-Fiber Polyester
						A-3057-4	3 + 1 gnd #6,#8, 600 V, RHH/RHW Insulation
3285	E-231	41	RGS-PVC coated conduit	212.85	534.55	A-3057-3	3 + 1 gnd #6,#8, 600 V, RHH/RHW Insulation
						Pull rope	Soft-Fiber Polyester
3286	E-231	41	RGS-PVC coated conduit	212.85	534.55	A-3057-3	3 + 1 gnd #6,#8, 600 V, RHH/RHW Insulation
						Pull rope	Soft-Fiber Polyester
3287	E-231	41	RGS-PVC coated conduit	212.85	534.55	A-3057-3	3 + 1 gnd #6,#8, 600 V, RHH/RHW Insulation
						Pull rope	Soft-Fiber Polyester
3288	E-231	41	RGS-PVC coated conduit	212.85	534.55	Pull rope	Soft-Fiber Polyester
						A-3057-3	3 + 1 gnd #6,#8, 600 V, RHH/RHW Insulation
3290	E-231	41	RGS-PVC coated conduit	212.85	534.55	Pull rope	Soft-Fiber Polyester
						A-3057-4	3 + 1 gnd #6,#8, 600 V, RHH/RHW Insulation
3291	E-231	41	RGS-PVC coated conduit	212.85	534.55	Pull rope	Soft-Fiber Polyester
						A-3057-4	3 + 1 gnd #6,#8, 600 V, RHH/RHW Insulation
3292	E-231	41	RGS-PVC coated conduit	212.85	534.55	Pull rope	Soft-Fiber Polyester
						A-3057-4	3 + 1 gnd #6,#8, 600 V, RHH/RHW Insulation
3293	E-231	41	RGS-PVC coated conduit	212.85	534.55	A-3057-4	3 + 1 gnd #6,#8, 600 V, RHH/RHW Insulation
						Pull rope	Soft-Fiber Polyester
3294	E-264 6	41	RGS-PVC coated conduit	527.18	702.80	Pull rope	Soft-Fiber Polyester
						2123-2	1-3/C + gnd #2, 600 V, EPR Insulation 6
3295	E-287	53	RGS-PVC coated conduit	754.18	1255.65	Pull rope	Soft-Fiber Polyester
						2120	1-3/C + gnd #1/0,600 V, EPR Insulation
3296	E-287	27	RGS-PVC coated conduit	196.20	229.03	Pull rope	Soft-Fiber Polyester
						2120-1	1-2PR #18 Twisted Shielded w/overall shield

For continuation, see next sheet.

CONDUIT AND TRAY SCHEDULE

E-426

REVISED BY	DATE	DATE REVISED
PBP	8/02	8/02

CALCULATED/DESIGNED BY: PBP
CHECKED BY: AB

DESIGN OVERSIGHT: BEHZAD GOLEMOHAMMADI

STATE OF CALIFORNIA - DEPARTMENT OF TRANSPORTATION
Caltrans

LAST REVISION 12-21-11
DATE PLOTTED => 20-DEC-2011
TIME PLOTTED => 17:13

FOR REDUCED PLANS ORIGINAL SCALE IS IN MILLIMETERS 0 20 40 60 80

DGN FILE =>04-0120f1_0381R06.dgn
USERNAME =>liorlco

CU 04251 | EA 0120F1

DIST	COUNTY	ROUTE	KILOMETER POST TOTAL PROJECT	SHEET No	TOTAL SHEETS
04	SF	80	13.2/13.9	382 R7	1204

REGISTERED ELECTRICAL ENGINEER 12/19/02 DATE

12-6-04
PLANS APPROVAL DATE

REGISTERED PROFESSIONAL ENGINEER JENS ERLINGSSON No. 8249 Exp. 9/30/06 ELECTRICAL STATE OF CALIFORNIA

PB POWER, Inc.
A Parsons Brinckerhoff Company
303 Second St., Suite 700N
San Francisco, CA 94107-1317

The State of California or its officers or agents shall not be responsible for the accuracy or completeness of electronic copies of this plan sheet.

Caltrans now has a web site! To get to the web site, go to http://www.dot.ca.gov

Metric

REQUEST FOR INFORMATION NOT ADDRESSED IN THIS CCO REMAIN IN FORCE

MARK	DATE	DESCRIPTIONS	BY	CH'D	CCO#
		REVISIONS			
7	12/21/11	ELECTRICAL CHANGE FOR ELEVATION 53 IMPROVEMENTS	TW	RG	190
6	11/07/11	PLATFORM MODIFICATIONS	RM	DO	206
5	07/01/11	TOS MODIFICATIONS	RR	RG	81
4	03/26/10	DEHUMIDIFIER SCADA INTERFACE	RR	RG FW	130
3	12/23/09	TOWER BASE MEP	RR AWG	RG FW	79
2	09/18/09	TOWER UTILITY PANELS	JS TW	RG	70
1	02/19/08	ELECTRICAL MODIFICATIONS	MP EL	RR	42

CONTRACT CHANGE ORDER NO. 190
SHEET 26 OF 37

REGISTERED PROFESSIONAL ENGINEER DAVID H. OTO No. 10699 Exp. 06/30/2013 ELECTRICAL STATE OF CALIFORNIA
7 6
FOR REVISION ONLY

REGISTERED PROFESSIONAL ENGINEER SYN YEE CHIN No. 18186 Exp. 09/30/2013 ELECTRICAL STATE OF CALIFORNIA
FOR REVISION ONLY
4 5

REGISTERED PROFESSIONAL ENGINEER FADI WALIEDDINE No. 11465 Exp. 12/31/2009 ELECTRICAL STATE OF CALIFORNIA
FOR REVISION ONLY
2 3

REGISTERED PROFESSIONAL ENGINEER MICHAEL FUMIO TAKATA No. E 8651 Exp. 9/30/2008 ELECTRICAL STATE OF CALIFORNIA
FOR REVISION ONLY
1

CONDUIT DATA

Conduit No.	Reference	Size	Type	Total Fill (mm²)	Allowable Fill (mm²)	Included Cable No.	Conductor Type
3297	E-264	27	RGS-PVC coated conduit	219.84	229.03	Pull rope	Soft-Fiber Polyester
						2119-2	4 pair #22,shielded pairs,300 V,PE Insulation
						2121-1	1-2PR #18 Twisted Shielded w/overall shield
3298	E-265	53	RGS-PVC coated conduit	208.67	879.42	Pull rope	Soft-Fiber Polyester
						UP210-9	1-2/C + gnd #8, 600 V, EPR Insulation
3299	E-287	27	RGS-PVC coated conduit	196.20	229.03	Pull rope	Soft-Fiber Polyester
						2120-1	1-2PR #18 Twisted Shielded w/overall shield
3303	E-96	53	RGS conduit	490.14		Pull rope	Soft-Fiber Polyester
3304	E-96	53	RGS conduit	490.14		Pull rope	Soft-Fiber Polyester
3307	E-266	41	RGS conduit	417.34	534.55	Pull rope	Soft-Fiber Polyester
						UP210-16A	1-2/C + gnd #10, 600V EPR Insulation
						UP210-16B	1-2/C + gnd #10, 600V EPR Insulation
3308	E-266	53	RGS conduit	671.10	879.42	Pull rope	Soft-Fiber Polyester
						UP210-14A	1-2/C + gnd #10, 600V EPR Insulation
						UP210-14B	1-2/C + gnd #10, 600V EPR Insulation
						UP210-23	1-2/C + gnd #8, 600V EPR Insulation
						UP210-26	1-2/C + gnd #8, 600V EPR Insulation
3309	E-266	53	RGS conduit	671.10	879.42	Pull rope	Soft-Fiber Polyester
						UP210-15A	1-2/C + gnd #10, 600V EPR Insulation
						UP210-15B	1-2/C + gnd #10, 600V EPR Insulation
						UP210-24	1-2/C + gnd #8, 600V EPR Insulation
						UP210-22	1-2/C + gnd #8, 600V EPR Insulation
3311	E-265	53	RGS-PVC coated conduit	0.00	879.42	Pull rope	Soft-Fiber Polyester
3313	E-266, E-266A	53	RGS-PVC coated conduit	342.55	879.42	Pull rope	Soft-Fiber Polyester
						UP210-21A	2+1 gnd #10, #10, 600V RHH/RHW Insulation
						UP210-21B	2+1 gnd #10, #10, 600V RHH/RHW Insulation
						UP210-23	1-2/C + gnd #8, 600V EPR Insulation
3314	E-266, E-266A	53	RGS-PVC coated conduit	342.55	879.42	Pull rope	Soft-Fiber Polyester
						UP210-22A	2+1 gnd #10, #10, 600V RHH/RHW Insulation
						UP210-22B	2+1 gnd #10, #10, 600V RHH/RHW Insulation
						UP210-24	1-2/C + gnd #8, 600V EPR Insulation
3315	E-266, E-266A	53	RGS-PVC coated conduit	286.0	879.42	Pull rope	Soft-Fiber Polyester
						UP210-5 & 7	1-4/C + gnd #8 600V EPR Insulation
3316	E-264B, E-264C E-278, E-284	78	RGS-PVC coated conduit	1300.80	1935.24	Pull rope	Soft-Fiber Polyester
						UP210-2 & 4	1-4/C + gnd #6, 600 V, EPR Insulation
						UP210-14 & 18	1-4/C + gnd #8, 600 V, EPR Insulation
						UP210-21	1-2/C + gnd #8, 600V EPR Insulation
						UP210-23	1-2/C + gnd #8, 600V EPR Insulation
						UP210-26	1-2/C + gnd #8, 600V EPR Insulation
3316A	E-266	53	RGS-PVC coated conduit	475.15	684.55	Pull rope	Soft-Fiber Polyester
						UP210-2/4	1-4/C + gnd #8, 600V EPR Insulation
						UP210-21	1-2/C + gnd #8, 600V EPR Insulation
~~3316B~~							
~~3319~~							
3320	E-264	78	RGS-PVC coated conduit	1389.75	1935.24	2120	1-3/C + gnd #1/0, 600 V, EPR Insulation
						Pull rope	Soft-Fiber Polyester
						UP210-12	1-2/C + gnd #12, 600V EPR Insulation
						UP210-6/8	1-4/C + gnd #8, 600V EPR Insulation
						UP210-13/17	1-4/C + gnd #8, 600V EPR Insulation
3320A	E-287	53	RGS-PVC coated conduit	754.18	879.42	2120	1-3/C + gnd #1/0, 600 V, EPR Insulation
						Pull rope	Soft-Fiber Polyester
3322	E-264	78	RGS-PVC coated conduit	754.18	1935.24	2119-A-1	1-3/C + gnd #1/0, 600 V, EPR Insulation
						Pull rope	Soft-Fiber Polyester
3322C	E-265	78	RGS-PVC coated conduit	754.18	1935.24	2119-A-1	1-3/C + gnd #1/0, 600 V, EPR Insulation
						Pull rope	Soft-Fiber Polyester
3323	E-264	78	RGS-PVC coated conduit	754.18	1935.24	Pull rope	Soft-Fiber Polyester
						2121	1-3/C + gnd #1/0,600 V, EPR Insulation
3323A	E-286	78	RGS-PVC coated conduit	959.40	1935.24	Pull rope	Soft-Fiber Polyester
						2121	1-3/C + gnd #1/0,600 V, EPR Insulation
						UP210-28	1-2/C + gnd #12, 600V EPR Insulation
						UP210-30	1-2/C + gnd #12, 600V EPR Insulation

CONDUIT DATA

Conduit No.	Reference	Size	Type	Total Fill (mm²)	Allowable Fill (mm²)	Included Cable No.	Conductor Type
3323B	E-286, E-287	78	RGS-PVC coated conduit	959.40	1935.24	Pull rope	Soft-Fiber Polyester
						2121	1-3/C + gnd #1/0,600 V, EPR Insulation
						UP210-28	1-2/C #12 + gnd, 600V, EPR Insulation
						UP210-30	1-2/C #12 + gnd, 600V, EPR Insulation
3323C	E-287, E-287A	78	RGS-PVC coated conduit	959.40	1935.24	Pull rope	Soft-Fiber Polyester
						2121	1-3/C + gnd #1/0,600 V, EPR Insulation
						UP210-28	1-2/C #12 + gnd, 600V, EPR Insulation
						UP210-30	1-2/C #12 + gnd, 600V, EPR Insulation
3324	E-286	53	RGS-PVC coated conduit	98.10	879.42	Pull rope	Soft-Fiber Polyester
						2121-1	1-2PR #18 Twisted shielded with overall shield
3324A	E-286, E-287	53	RGS-PVC coated conduit	131.79	879.42	Pull rope	Soft-Fiber Polyester
						2121-1	1-2PR #18 Twisted shielded with overall shield
3324B	E-264	78	Liquidtight flex metal conduit	0.00	1935.24	Pull rope	Soft-Fiber Polyester
3324C	E-287, E-287A	53	RGS-PVC coated conduit	98.10	879.42	Pull rope	Soft-Fiber Polyester
						2121-1	1-2PR #18 Twisted shielded with overall shield
3329	E-265	53	RGS-PVC coated conduit	0.00	879.42	Pull rope	Soft-Fiber Polyester
~~3330~~							
~~3330C~~							
~~3330D~~							
~~3330E~~							
~~3330F~~							
~~3333~~							
~~3337~~							
3337A	E-266	53	RGS-PVC coated conduit	520.24	879.42	Pull rope	Soft-Fiber Polyester
						UP210-6 & 8	1-4/C + gnd #6, 600 V, EPR Insulation
						UP210-13A	1-3/C + gnd #10, 600V EPR Insulation
						UP210-13B	1-3/C + gnd #10, 600V EPR Insulation

For continuation, see next sheet.

CONDUIT AND TRAY SCHEDULE

E-427

REVISED BY | DATE REVISED
DATE 8/02 | PBP | AB 8/02
CALCULATED/DESIGNED BY | CHECKED BY
DESIGN OVERSIGHT
BEHZAD GOLEMOHAMMADI

STATE OF CALIFORNIA - DEPARTMENT OF TRANSPORTATION
Caltrans

LAST REVISION 12-21-11
DATE PLOTTED => 20-DEC-2011
TIME PLOTTED => 17:13

FOR REDUCED PLANS ORIGINAL SCALE IS IN MILLIMETERS 0 20 40 60 80
DGN FILE =>04-0120F1_0382R07.dgn
USERNAME =>llorico
CU 04251
EA 0120F1

DIST	COUNTY	ROUTE	KILOMETER POST TOTAL PROJECT	SHEET No	TOTAL SHEETS
04	SF	80	13.2/13.9	383 R6	1204

REGISTERED ELECTRICAL ENGINEER 12/19/02 DATE

12-6-04
PLANS APPROVAL DATE

REGISTERED PROFESSIONAL ENGINEER JENS ERLINGSSON No. 8249 Exp. 9/30/06 ELECTRICAL STATE OF CALIFORNIA

PB POWER, Inc.
A Parsons Brinckerhoff Company
303 Second St., Suite 700N
San Francisco, CA 94107-1317

The State of California or its officers or agents shall not be responsible for the accuracy or completeness of electronic copies of this plan sheet.

Caltrans now has a web site! To get to the web site, go to http://www.dot.ca.gov

Caltrans Metric

REQUEST FOR INFORMATION NOT ADDRESSED IN THIS CCO REMAIN IN FORCE

MARK	DATE	DESCRIPTIONS	BY	CH'D	CCO#
6	12/21/11	ELECTRICAL CHANGES FOR ELEVATION 53 IMPROVEMENTS	TW	RG	190
5	09/21/11	TOWER SUSPENDER CABLE & ELEVATOR	TW	RM	203S1
4	07/01/11	TOS MODIFICATIONS	RR	RG	81
3	03/26/10	DEHUMIDIFIER SCADA INTERFACE	TW	RG SYC	130
2	09/18/09	TOWER UTILITY PANELS	JS TW	RG FW	70
1	02/19/08	ELECTRICAL MODIFICATIONS	MP EL	RR	42

REVISIONS

CONTRACT CHANGE ORDER NO. 190
SHEET 27 OF 37

REGISTERED PROFESSIONAL ENGINEER DAVID H. OTO No. 10699 Exp. 06/30/2013 ELECTRICAL STATE OF CALIFORNIA
FOR REVISION ONLY 6

REGISTERED PROFESSIONAL ENGINEER SYN YEE CHIN No. 18186 Exp. 09/30/2011 ELECTRICAL STATE OF CALIFORNIA
FOR REVISION ONLY 3 4 5

REGISTERED PROFESSIONAL ENGINEER FADI WALIEDDINE No. 11465 Exp. 12/31/2009 ELECTRICAL STATE OF CALIFORNIA
FOR REVISION ONLY 2

REGISTERED PROFESSIONAL ENGINEER MAXWELL FUMIO TAKAKI No. E 8651 Exp. 9/30/2008 ELECTRICAL STATE OF CALIFORNIA
FOR REVISION ONLY 1

CONDUIT DATA

Conduit No.	Reference	Size	Type	Total Fill (mm²)	Allowable Fill (mm²)	Included Cable No.	Conductor Type
3339	E-264 (6)	53	RGS-PVC coated conduit	754.18	879.42	2125-A (6)	1-3/C +gnd #1/0, 600 V,EPR Insulation
~~3348~~ (6)							
3348C	E-345, E-281	27	RGS-PVC coated conduit	150.44	229.03	MVDSE02A	MVDS DLC
3348D	E-345, E-281	27	RGS-PVC coated conduit	150.44	229.03	MVDSW03A	MVDS DLC
3349 (6)	E-281	41	RGS-PVC coated conduit	170.60 (6)	534.55	CCTVE01B	HCC
						2120-1	1-2PR #18 Twisted Shielded w/ overall shield
3349C	E-281	41	RGS-PVC coated conduit	72.50 (6)	534.55	CCTVE01B	HCC
3350	E-286	27	RGS-PVC coated conduit		229.03	Pull rope	Soft-Fiber Polyester
3351A	E-264	53	RGS-PVC coated conduit	527.18	879.42	Pull rope	Soft-Fiber Polyester
						2123-3	1-3C#2 + gnd, 600 V, EPR Insulation
3352	E-286	27	RGS-PVC coated conduit		229.03	Pull rope	Soft-Fiber Polyester
3353	E285B	53	RGS-PVC coated conduit	306.56	879.42	Pull Rope	Soft-Fiber Polyester
						UP210-1B-13 & 14	4-#10+gnd, 600V, RHH/RHW Insulation
						UP210-1B-5	1-2C#12 + gnd, 600V, EPR Insulation
						UP210-1A-5	1-2C#12 + gnd, 600V, EPR Insulation
3354	E285B	53	RGS conduit	491.22	879.42	Pull Rope	Soft-Fiber Polyester
						UP210-1B-5	1-2C#12 + gnd, 600V, EPR Insulation
						UP210-1A-5	1-2C#12 + gnd, 600V, EPR Insulation
						UP210-1B-1 & 6	1-4C#8 + gnd, 600V, EPR Insulation

CONDUIT DATA

Conduit No.	Reference	Size	Type	Total Fill (mm²)	Allowable Fill (mm²)	Included Cable No.	Conductor Type
3355	E-286	41	RGS-PVC coated conduit	0.00	534.55	Pull Rope	Soft-Fiber Polyester
3356	E-286	53	RGS-PVC coated conduit	0.00	879.42	Pull Rope	Soft-Fiber Polyester
3358	E-286	27	RGS-PVC coated conduit	0.00	229.03	Pull rope	
3359 (6)	E-281	41	RGS-PVC coated conduit	72.50 (6)	534.55	CCTVE01A	HCC
3359C	E-281	41	RGS-PVC coated conduit	72.50 (6)	534.55	CCTVE01A	HCC
3364	E-285B	53	RGS-PVC coated conduit	205.22	879.42	Pull Rope	Soft-Fiber Polyester
						UP210-1A-5	1-2C#12 + gnd, 600V, EPR Insulation
						UP210-1B-5	1-2C#12 + gnd, 600V, EPR Insulation

For continuation, see next sheet.

CONDUIT AND TRAY SCHEDULE

E-428

REVISED BY	DATE REVISED
PBP	DATE 8/02
AB	8/02

CALCULATED/DESIGNED BY
CHECKED BY

DESIGN OVERSIGHT
BEHZAD GOLEMOHAMMADI

STATE OF CALIFORNIA - DEPARTMENT OF TRANSPORTATION
Caltrans

LAST REVISION 12-21-11
DATE PLOTTED => 20-DEC-2011
TIME PLOTTED => 17:13

0 20 40 60 80

DGN FILE =>04-0120f1_0383R06.dgn
USERNAME =>llorico

CU 04251 | EA 0120F1

DATE	REVISED BY	DATE REVISED
8/02	AB	8/02

CALCULATED/DESIGNED BY: PBP
CHECKED BY:

DESIGN OVERSIGHT: BEHZAD GOLEMOHAMMADI RIGHT

STATE OF CALIFORNIA - DEPARTMENT OF TRANSPORTATION
Caltrans

CONDUIT DATA

Conduit No.	Reference	Size	Type	Total Fill (mm²)	Allowable Fill (mm²)	Included Cable No.	Conductor Type
3367	E-285B	53	RGS conduit	712.74 △4	879.42	Pull Rope	Soft-Fiber Polyester
						UP210-1A-10A	1-2/C + gnd #12, 600V, EPR Insulation △4
						UP210-1A-12A	1-2/C + gnd #12, 600V, EPR Insulation
						UP210-1A-11A	1-2/C + gnd #10, 600V, EPR Insulation
						UP210-1A-11B	1-2/C + gnd #10, 600V, EPR Insulation
						UP210-1A-11B	1-2/C + gnd #10, 600V, EPR Insulation
						UP210-1A-9A	1-2/C + gnd #10, 600V, EPR Insulation
3368	E-285B	53	RGS-PVC coated conduit	572	879.42	Pull Rope	Soft-Fiber Polyester
						UP210-1A-9 & 10	1-4C#8 + gnd, 600V, EPR Insulation
						UP210-1A-11 & 12	1-4C#8 + gnd, 600V, EPR Insulation
3369	E-285B	78	RGS conduit	738.18 △4	1935.24	Pull Rope	Soft-Fiber Polyester
						UP210-1A-9 & 10	1-4C#8 + gnd, 600V, EPR Insulation
						UP210-1A-11 & 12	1-4C#8 + gnd, 600V, EPR Insulation
						UP210-1A-5	1-2C#12 + gnd, 600V, EPR Insulation
						△4 UP210-1B-5	1-2C#12 + gnd, 600V, EPR Insulation
3375	E-32, E-278, E-264C	53	RGS-PVC coated conduit	754.18	879.42	2123	1-3C#1/0 + gnd, 600V,EPR Insulation
3376	E-32, E-278, E-264C	53	Liquidtight flex metal conduit	754.18	1109.96 △4	Pull Rope	Soft-Fiber Polyester
						2123-A	1-3C#1/0 + gnd, 600v, EPR Insulation
3377	E-32, E-278, E-264C	53	Liquidtight flex metal conduit	923.47 △4	1109.96	Pull Rope	Soft-Fiber Polyester
						2123-B	1-4C#1/0 + gnd, 600V, EPR Insulation
3378	E-264C, E-278	78	RGS-PVC coated conduit	1137.35	1935.24	UP210-21	1-2C#8 + gnd, 600V, EPR Insulation
						UP210-22	1-2C#8 + gnd, 600V, EPR Insulation
						UP210-23	1-2C#8 + gnd, 600V, EPR Insulation
						UP210-24	1-2C#8 + gnd, 600V, EPR Insulation
						UP210-26	1-2C#8 + gnd, 600V, EPR Insulation
3379	E-264C, E-278	78	RGS-PVC coated conduit	1541.07 △4	1935.24	UP210-9	1-2C#8 + gnd, 600V, EPR Insulation
						UP210-5 & 7	1-4C#8 + gnd, 600V, EPR Insulation
						UP210-15 & 19	1-4C#8 + gnd, 600V, EPR Insulation
						UP210-16 & 20	1-4C#8 + gnd, 600V, EPR Insulation
						UP210-13 & 17	1-4C#8 + gnd, 600V, EPR Insulation
						UP210-14 & 18	1-4C#8 + gnd, 600V, EPR Insulation
3380	E-264C, E-278 △4 E-264B	78	RGS-PVC coated conduit	1429.28 △4	1935.24	UP210-2 & 4	1-4C#6 + gnd, 600V, EPR Insulation
						UP210-6 & 8	1-4C#6 + gnd, 600V, EPR Insulation
						UP210-10	1-2C#12 + gnd, 600V, EPR Insulation
						UP210-11	1-2C#12 + gnd, 600V, EPR Insulation
						UP210-3	1-2C#8 + gnd, 600V, EPR Insulation
						UP210-12	1-2C#12 + gnd, 600V, EPR Insulation
						UP210-28	1-2C#12 + gnd, 600 V, EPR Insulation
						UP210-30	1-2C#12 + gnd, 600 V, EPR Insulation
						GFR	#2 Bare copper wire, stranded △4
3381	E-285B	53	RGS-PVC coated conduit	572	879.42	Pull Rope	Soft-Fiber Polyester
						UP210-1B-9 &10	1-4C#8 + gnd 600V, EPR Insulation
						UP210-1B-11&12	1-4C#8 + gnd 600V, EPR Insulation
3382	E-285B	53	RGS conduit	858	879.42	Pull Rope	Soft-Fiber Polyester
						UP210-1B-9 &10	1-4C#8 + gnd 600V, EPR Insulation
						UP210-1B-11&12	1-4C#8 + gnd 600V, EPR Insulation
						UP210-1B-13&14	1-4C#8 + gnd 600V, EPR Insulation
3383	E-285B	53	RGS conduit	572	879.42	Pull Rope	Soft-Fiber Polyester
						UP210-1B-9 &10	1-4C#8 + gnd 600V, EPR Insulation
						UP210-1B-11&12	1-4C#8 + gnd 600V, EPR Insulation

REQUEST FOR INFORMATION NOT ADDRESSED IN THIS CCO REMAIN IN FORCE

MARK	DATE	DESCRIPTIONS	BY	CH'D	CCO#
4	12/21/11	ELECTRICAL CHANGES FOR ELEVATION 53 IMPROVEMENTS	TW	RG	190
3	03/26/10	DEHUMIDIFIER SCADA INTERFACE	RR	RG FW	130
2	12/02/09	TOWER UTILITY PANELS	JS TW	RG FW	70
1	02/19/08	ELECTRICAL MODIFICATIONS	MP EL	RR	42

REVISIONS

CONTRACT CHANGE ORDER NO. 190
SHEET 28 OF 37

Caltrans Metric

DIST	COUNTY	ROUTE	KILOMETER POST TOTAL PROJECT	SHEET No	TOTAL SHEETS
04	SF	80	13.2/13.9	384 R4	1204

12/19/02
REGISTERED ELECTRICAL ENGINEER DATE

12-6-04
PLANS APPROVAL DATE

REGISTERED PROFESSIONAL ENGINEER JENS ERLINGSSON No. 8249 Exp. 9/30/06 ELECTRICAL STATE OF CALIFORNIA

PB POWER, Inc.
A Parsons Brinckerhoff Company
303 Second St., Suite 700N
San Francisco, CA 94107-1317

The State of California or its officers or agents shall not be responsible for the accuracy or completeness of electronic copies of this plan sheet.

Caltrans now has a web site! To get to the web site, go to http://www.dot.ca.gov

REGISTERED PROFESSIONAL ENGINEER DAVID H. OTO No. 10699 Exp. 06/30/2013 ELECTRICAL STATE OF CALIFORNIA
FOR REVISION ONLY △4

REGISTERED PROFESSIONAL ENGINEER SYN YEE CHIN No. 18186 Exp. 09/30/2011 ELECTRICAL STATE OF CALIFORNIA
FOR REVISION ONLY △3

REGISTERED PROFESSIONAL ENGINEER FADI WALIEDDINE No. 11465 Exp. 12/31/2009 ELECTRICAL STATE OF CALIFORNIA
FOR REVISION ONLY △2

REGISTERED PROFESSIONAL ENGINEER MASSELL FUMIO TAKAKI No. E 8651 Exp. 9/30/2008 ELECTRICAL STATE OF CALIFORNIA
FOR REVISION ONLY △1

CONDUIT DATA

Conduit No.	Reference	Size	Type	Total Fill (mm²)	Allowable Fill (mm²)	Included Cable No.	Conductor Type
3391	E-287, E-287A	27	RGS-PVC coated conduit	187.79	229.03	Pull rope	Soft-Fiber Polyester
						UP210-30	2/C #12 + G, 600 V, EPR Insulation
						UP210-30A	3/C #14, 600 V, EPR Insulation
3393	E-287, E-287A	53	RGS-PVC coated conduit	754.18	1165.23	2121	1-3/C + gnd #1/0, 600 V, EPR Insulation
3394	E-287, E-287A	27	RGS-PVC coated conduit	126.88	229.03	2121-A	1-3/C + gnd #10, 600 V, EPR Insulation
3395	E-287, E-287A	41	RGS-PVC coated conduit	413.46	534.55	Pull rope	Soft-Fiber Polyester
						2121-3	1-3/C #14, 600 V, EPR Insulation
						2121-4	1-3/C #14, 600 V, EPR Insulation
						2121-5	1-3/C #14, 600 V, EPR Insulation
						2121-6	1-3/C #14, 600 V, EPR Insulation
						2121-7	1-3/C #14, 600 V, EPR Insulation
3396	E-287, E-287A	53	RGS-PVC coated conduit	521.25	879.42	Pull rope	Soft-Fiber Polyester
						2121-3	1-3/C #14, 600 V, EPR Insulation
						2121-4	1-3/C #14, 600 V, EPR Insulation
						2121-5	1-3/C #14, 600 V, EPR Insulation
						2121-6	1-3/C #14, 600 V, EPR Insulation
						2121-7	1-3/C #14, 600 V, EPR Insulation
						UP210-28	2/C #12 + G, 600 V, EPR Insulation
						UP210-30A	3/C #14, 600 V, EPR Insulation
3397	E-287, E-287A	27	RGS-PVC coated conduit	131.79	229.03	Pull rope	Soft-Fiber Polyester
						2121-2	1-3PR #18 twisted shielded with overall shield
3398	E-265	53	RGS-PVC coated conduit	0.00	879.42	Pull rope	Soft-Fiber Polyester
~~3399~~							
3448A	E-286	53	RGS-PVC coated conduit	286	879.42	Pull rope	Soft-Fiber Polyester
						UP210-1B-15&16	1-4C#8 + gnd, 600V, EPR Insulation

For continuation, see next sheet.

CONDUIT AND TRAY SCHEDULE

E-429

LAST REVISION 12-21-11
DATE PLOTTED => 20-DEC-2011
TIME PLOTTED => 17:14

DIST	COUNTY	ROUTE	KILOMETER POST TOTAL PROJECT	SHEET No	TOTAL SHEETS
04	SF	80	13.2/13.9	385 R4	1204

Jens Erlingsson 12/19/02
REGISTERED ELECTRICAL ENGINEER DATE

12-6-04
PLANS APPROVAL DATE

REGISTERED PROFESSIONAL ENGINEER JENS ERLINGSSON No. 8249 Exp. 9/30/06 ELECTRICAL STATE OF CALIFORNIA

PB POWER, Inc.
A Parsons Brinckerhoff Company
303 Second St., Suite 700N
San Francisco, CA 94107-1317

The State of California or its officers or agents shall not be responsible for the accuracy or completeness of electronic copies of this plan sheet.

Caltrans now has a web site! To get to the web site, go to http://www.dot.ca.gov

Caltrans Metric

REQUEST FOR INFORMATION NOT ADDRESSED IN THIS CCO REMAIN IN FORCE					
4	12/21/11	ELECTRICAL CHANGES FOR ELEVATION 53 IMPROVEMENTS	TW	RG	190
3	02/26/10	TOWER BASE MEP	JS TW	RG SYC	79
2	12/02/09	TOWER UTILITY PANELS	JS TW	RG FW	70
1	02/19/08	ELECTRICAL MODIFICATIONS	MP EL	RR	42
MARK	DATE	DESCRIPTIONS	BY	CH'D	CCO#
		REVISIONS			

CONTRACT CHANGE ORDER NO. 190
SHEET 29 OF 37

REGISTERED PROFESSIONAL ENGINEER DAVID H. OTO No. 10699 Exp. 06/30/2013 ELECTRICAL STATE OF CALIFORNIA
FOR REVISION ONLY 4

REGISTERED PROFESSIONAL ENGINEER SYN YEE CHIN No. 18186 Exp. 09/30/2011 ELECTRICAL STATE OF CALIFORNIA
FOR REVISION ONLY 3

REGISTERED PROFESSIONAL ENGINEER FADI WALIEDDINE No. 11465 Exp. 12/31/2009 ELECTRICAL STATE OF CALIFORNIA
FOR REVISION ONLY 2

REGISTERED PROFESSIONAL ENGINEER MARCEL FUMIO TAKATA No. E 8651 Exp. 9/30/2008 ELECTRICAL STATE OF CALIFORNIA
FOR REVISION ONLY 1

CONDUIT DATA

Conduit No.	Reference	Size	Type	Total Fill (mm²)	Allowable Fill (mm²)	Included Cable No.	Conductor Type
3459A	E-265	41	RGS-PVC coated conduit	227.46	524.55	UP210-9	1-2C#8 + gnd, 600V, EPR Insulation
3464A	E-286	53	RGS-PVC coated conduit	286	879.42	UP210-1A-13&14	1-4C#8 + gnd, 600V, EPR Insulation
3464B	E-286	53	RGS-PVC coated conduit	286	879.42	UP210-1A-13&14	1-4C#8 + gnd, 600V, EPR Insulation
3501	E-279	53	RGS-PVC coated conduit	356.37	879.42	Pull Rope	Soft-Fiber Polyester
	E-284A			4		UP210-1A-1A	1-2/C + gnd #10, 600V, EPR Insulation
						UP210-1A-1B	1-2/C + gnd #10, 600V, EPR Insulation
						UP210-1A-6A	1-2/C + gnd #12, 600V, EPR Insulation
3502	E-264B, E-264D	78	RGS conduit	876.61	1935.24	Pull Rope	Soft-Fiber Polyester
				4		UP210-13 &17	1-4C #8 + gnd, 600V, EPR Insulation
						UP210-13A	1-2/C + gnd #10, 600V, EPR Insulation
						UP210-13B	1-2/C + gnd #10, 600V, EPR Insulation
						UP210-17A	1-2/C + gnd #12, 600V, EPR Insulation
						UP210-1A-3A	1-2/C + gnd #10, 600V, EPR Insulation
						UP210-1A-3B	1-2/C + gnd #10, 600V, EPR Insulation
3518	E-285C, E-285	78	RGS conduit	917.60	1935.24	Pull Rope	Soft-Fiber Polyester
		4		4		UP210-1A-5	1-2/C + gnd #12 600V, EPR Insulation
						UP210-1A-1A	1-2/C + gnd #10, 600V, EPR Insulation
						UP210-1A-1B	1-2/C + gnd #10, 600V, EPR Insulation
						UP210-1B-5	1-2/C + gnd #12, 600V, EPR Insulation
						UP210-1A-3A	1-2/C + gnd #10, 600V, EPR Insulation
						UP210-1A-3B	1-2/C + gnd #10, 600V, EPR Insulation
						UP210-1A-4A	1-2/C + gnd #12, 600V, EPR Insulation
						UP210-1A-6A	1-2/C + gnd #12, 600V, EPR Insulation
3519	E-285C, E-285	53	RGS conduit	858	879.42	Pull Rope	Soft-Fiber Polyester
						UP210-1A-9&10	1-4C#8 + gnd, 600V, EPR Insulation
						UP210-1A-11&12	1-4C#8 + gnd, 600V, EPR Insulation
						UP210-1A-13&14	1-4C#8 + gnd, 600V, EPR Insulation
3520	E-285 E-279	53	RGS conduit	527.18	879.42	Pull Rope	Soft-Fiber Polyester
	E-285A					2123-2	1-3C + gnd, #2, 600V, EPR Insulation
3521	E-285 E-279	53	RGS conduit	472.21	879.42	Pull Rope	Soft-Fiber Polyester
	E-285A, E-285C					UP210-1A-5	1-2C#12 + gnd, 600V, EPR Insulation
						UP210-1A-3 & 4	4 + 1 gnd, #8, 600V, RHH/RHW Insulation
						UP210-1A-1 & 6	4 + 1 gnd, #8, 600V, RHH/RHW Insulation
3522	E-285 E-279	53	RGS conduit	858	879.42	Pull Rope	Soft-Fiber Polyester
	E-285A, E-285C					UP210-1A-9&10	1-4C#8 + gnd, 600V, EPR Insulation
						UP210-1A-11&12	1-4C#8 + gnd, 600V, EPR Insulation
						UP210-1A-13&14	1-4C#8 + gnd, 600V, EPR Insulation
3523	E-285 E-279	41	RGS conduit	0.00	534.55	Pull Rope	Soft-Fiber Polyester
	E-285A						
3524	E-285A E-279	27	RGS Conduit	133.19	229.03	Pull Rope	Soft-Fiber Polyester
						2123-2A	3 + 1 gnd, #6, 600V, RHH/RHW Insulation
3525	E-285A E-279	41	RGS Conduit	271.48	534.55	Pull Rope	Soft-Fiber Polyester
						2123-2B	4 + 1 gnd, #4, 600V, RHH/RHW Insulation
3600	E-264B, E-278	78	RGS-PVC coated conduit	1158.97	1935.24	Pull Rope	Soft-Fiber Polyester
	E-284, E-264C			4		UP210-9	1-2C#8 + gnd, 600V, EPR Insulation
						UP 210-15 & 19	1-4C#8 + gnd, 600V, EPR Insulation
						UP210-5 & 7	1-4C#8 + gnd, 600V, EPR Insulation
						UP210-22	1-2C#8 + gnd, 600V, EPR Insulation
						UP210-24	1-2C#8 + gnd, 600V, EPR Insulation
3601	E-279	41	RGS-PVC coated conduit	308.73	534.55	Pull Rope	Soft-Fiber Polyester
	E-284A			4		UP210-1A-11A	1-2/C + gnd #10, 600V, EPR Insulation
						UP210-1A-11B	1-2/C + gnd #10, 600V, EPR Insulation
						UP210-1A-12A	1-2/C + gnd #12, 600V, EPR Insulation

CONDUIT DATA

Conduit No.	Reference	Size	Type	Total Fill (mm²)	Allowable Fill (mm²)	Included Cable No.	Conductor Type
3602	E-264B	78	RGS conduit	876.61	1935.24	Pull Rope	Soft-Fiber Polyester
				4		UP 210-15 & 19	1-4C + gnd #8, 600V, EPR Insulation
						UP210-1A-9A	1-2/C + gnd #10, 600V, EPR Insulation
						UP210-1A-9B	1-2/C + gnd #10, 600V, EPR Insulation
						UP210-15A	1-2/C + gnd #10, 600V, EPR Insulation
						UP210-15B	1-2/C + gnd #10, 600V, EPR Insulation
						UP210-19A	1-2/C + gnd #12, 600V, EPR Insulation
3701	E-280	53	RGS-PVC coated conduit	356.37	879.42	Pull Rope	Soft-Fiber Polyester
	E-284A			4		UP 210-1B-1A	1 - 2/C + gnd #10, 600V, EPR Insulation
						UP 210-1B-1B	1 - 2/C + gnd #10, 600V, EPR Insulation
						UP 210-1B-6A	1 - 2/C + gnd #12, 600V, EPR Insulation

For continuation, see next sheet.

CONDUIT AND TRAY SCHEDULE

E-430

STATE OF CALIFORNIA - DEPARTMENT OF TRANSPORTATION
Caltrans

DESIGN OVERSIGHT
BEHZAD GOLEMOHAMMADI

CALCULATED/ DESIGNED BY	PBP	DATE 8/02	REVISED BY
CHECKED BY	AB	8/02	DATE REVISED

FOR REDUCED PLANS ORIGINAL SCALE IS IN MILLIMETERS 0 20 40 60 80

DGN FILE =>04-0120F1_0385R04.dgn
USERNAME =>llorico

CU 04251 | EA 0120F1

LAST REVISION 12-21-11
DATE PLOTTED => 20-DEC-2011
TIME PLOTTED => 17:14

DIST	COUNTY	ROUTE	KILOMETER POST TOTAL PROJECT	SHEET No	TOTAL SHEETS
04	SF	80	13.2/13.9	386 S1	1204

REGISTERED ELECTRICAL ENGINEER 12/21/11 DATE

PLANS APPROVAL DATE

REGISTERED PROFESSIONAL ENGINEER DAVID H. OTO No. 10699 Exp. 06/30/2013 ELECTRICAL STATE OF CALIFORNIA

PB AMERICAS, Inc.
A Parsons Brinckerhoff Company
303 Second St., Suite 700N
San Francisco, CA 94107-1317

The State of California or its officers or agents shall not be responsible for the accuracy or completeness of electronic copies of this plan sheet.

Caltrans now has a web site! To get to the web site, go to http://www.dot.ca.gov

Caltrans Metric

REQUEST FOR INFORMATION NOT ADDRESSED IN THIS CCO REMAIN IN FORCE

MARK	DATE	DESCRIPTIONS	BY	CH'D	CCO#
0	2/29/12	ELECTRICAL CHANGES FOR ELEVATION 53 IMPROVEMENTS	TW	RG	190

REVISIONS

CONTRACT CHANGE ORDER NO. 190
SHEET 30 OF 37

CONDUIT DATA

Conduit No	Reference	Size	Type	Total Fill (mm²)	Allowable Fill (mm²)	Included Cable No.	Conductor Type
3WW20	E-264/264B, E-281 E-293, E-366	152	152mmX152mm Wireway NEMA 4X	6600.23	9241.60	2119-A-1	1-3/C + gnd #1/0, 600V, EPR Insulation
						2119-B-1	1-3/C + gnd #1/0, 600V, EPR Insulation
						2120	1-3/C + gnd #1/0, 600V, EPR Insulation
						2123	1-3/C + gnd #1/0, 600V, EPR Insulation
						2123-2	1-3/C + gnd #2, 600V, EPR Insulation
						UP210-2 & 4	1-4/C + gnd #8, 600V, EPR Insulation
						UP210-10	1-2/C + gnd #10, 600V, EPR Insulation
						UP210-11	1-2/C + gnd #12, 600V, EPR Insulation
						UP210-14&18	1-4/C + gnd #8, 600V, EPR Insulation
						UP210-16&20	1-4/C + gnd #8, 600V, EPR Insulation
						UP210-21	1-2/C + gnd #8, 600V, EPR Insulation
						UP210-23	1-2/C + gnd #8, 600V, EPR Insulation
						UP210-26	1-2/C + gnd #8, 600V, EPR Insulation
						UP210-28	1-2/C + gnd #12, 600V, EPR Insulation
						UP210-30	1-2/C + gnd #12, 600V, EPR Insulation
						1201-1	1-2/C + gnd #10, 600V, EPR Insulation
						1201-2	1-2/C + gnd #10, 600V, EPR Insulation
						1201-4A	1-2/C #14, 600 V, EPR insulation
						1201-4B	1-2/C #14, 600 V, EPR insulation
						1201-4C	1-2/C #14, 600 V, EPR insulation
						1201-6	1-2/C + gnd #10, 600V, EPR Insulation
						2204-1	1-3/C #14, 600 V, EPR insulation
						2204-2	1-3/C #14, 600 V, EPR insulation
						2204-9	1-3/C #14, 600 V, EPR insulation
						2204-10	1-3/C #14, 600 V, EPR insulation
						2204-11	1-3/C #14, 600 V, EPR insulation
						GFR	250 kcMil, bare copper wire, stranded
3WW21	E-264/264B, E-281 E-293, E-366	152	152mmX152mm Wireway NEMA 4X	5898.91	9241.60	2120	1-3/C + gnd #1/0, 600V, EPR Insulation
						2123	1-3/C + gnd #1/0, 600V, EPR Insulation
						2123-2	1-3/C + gnd #2, 600V, EPR Insulation
						UP210-2 & 4	1-4/C + gnd #8, 600V, EPR Insulation
						UP210-5 & 7	1-4/C + gnd #8, 600V, EPR Insulation
						UP210-9	1-2/C + gnd #8, 600V, EPR Insulation
						UP210-14&18	1-4/C + gnd #8, 600V, EPR Insulation
						UP210-15&19	1-4/C + gnd #8, 600V, EPR Insulation
						UP210-16&20	1-4/C + gnd #8, 600V, EPR Insulation
						UP210-21	1-2/C + gnd #8, 600V, EPR Insulation
						UP210-22	1-2/C + gnd #8, 600V, EPR Insulation
						UP210-23	1-2/C + gnd #8, 600V, EPR Insulation
						UP210-24	1-2/C + gnd #8, 600V, EPR Insulation
						UP210-26	1-2/C + gnd #8, 600V, EPR Insulation
						UP210-28	1-2/C + gnd #12, 600V, EPR Insulation
						UP210-30	1-2/C + gnd #12, 600V, EPR Insulation
						UP210-10	1-2/C + gnd #10, 600V, EPR Insulation
						UP210-11	1-2/C + gnd #12, 600V, EPR Insulation
						UP210-12	1-2/C + gnd #12, 600V, EPR Insulation
						UP210-3	1-2/C + gnd #8, 600V, EPR Insulation
						GFR	250 kcMil, bare copper wire, stranded
						GFR	#2, bare copper wire, stranded
						UP210-13 &17	1-4/C + gnd #8, 600V, EPR Insulation
						UP210-6 & 8	1-4/C + gnd #8, 600V, EPR Insulation

CONDUIT DATA

Conduit No	Reference	Size	Type	Total Fill (mm²)	Allowable Fill (mm²)	Included Cable No.	Conductor Type
3WW22	E-264/264B, E-281 E-293, E-366	152	152mmX152mm Wireway NEMA 4X	4198.05	9241.60	2119-A-1	1-3/C + gnd #1/0, 600V, EPR Insulation
						2119-B-1	1-3/C + gnd #1/0, 600V, EPR Insulation
						UP210-5 & 7	1-4/C + gnd #8, 600V, EPR Insulation
						UP210-9	1-2/C + gnd #8, 600V, EPR Insulation
						UP210-15&19	1-4/C + gnd #8, 600V, EPR Insulation
						UP210-22	1-2/C + gnd #8, 600V, EPR Insulation
						UP210-24	1-2/C + gnd #8, 600V, EPR Insulation
						UP210-3	1-2/C + gnd #8, 600V, EPR Insulation
						UP210-10	1-2/C + gnd #10, 600V, EPR Insulation
						UP210-11	1-2/C + gnd #12, 600V, EPR Insulation
						1201-1	1-2/C + gnd #10, 600V, EPR Insulation
						1201-2	1-2/C + gnd #10, 600V, EPR Insulation
						1201-4A	1-2/C #14, 600 V, EPR insulation
						1201-4B	1-2/C #14, 600 V, EPR insulation
						1201-4C	1-2/C #14, 600 V, EPR insulation
						1201-6	1-2/C + gnd #10, 600V, EPR Insulation
						2204-1	1-3/C #14, 600 V, EPR insulation
						2204-2	1-3/C #14, 600 V, EPR insulation
						2204-9	1-3/C #14, 600 V, EPR insulation
						2204-10	1-3/C #14, 600 V, EPR insulation
						2204-11	1-3/C #14, 600 V, EPR insulation
						GFR	250 kcMil, bare copper wire, stranded

For continuation, see next sheet.

CONDUIT AND TRAY SCHEDULE

E-431A

THIS PLAN ACCURATE FOR ELECTRICAL WORK ONLY.

DATE	REVISED BY	DATE REVISED
XX/XX	XX	XX/XX

CALCULATED/DESIGNED BY XX
CHECKED BY XX

DESIGN OVERSIGHT
BEHZAD GOLEMOHAMMADI

STATE OF CALIFORNIA - DEPARTMENT OF TRANSPORTATION
Caltrans

FOR REDUCED PLANS ORIGINAL SCALE IS IN MILLIMETERS 0 20 40 60 80

DGN FILE =>T:\13103\MS\pse\SAS Struc\CCO\SAS CCO190 (Elev 53)\2-29-2012 DRAFT 1\04-0120f1_03865S01.dgn
USERNAME =>garciar

CU 04251 EA 0120F1

LAST REVISION 12-21-11
DATE PLOTTED => 2/29/2012
TIME PLOTTED => 11:14:50 AM

DIST	COUNTY	ROUTE	KILOMETER POST TOTAL PROJECT	SHEET No	TOTAL SHEETS
04	SF	80	13.2/13.9	386 S2	1204

REGISTERED ELECTRICAL ENGINEER 12/21/11 DATE

PLANS APPROVAL DATE

REGISTERED PROFESSIONAL ENGINEER DAVID H. OTO No. 10699 Exp. 06/30/2013 ELECTRICAL STATE OF CALIFORNIA

PB AMERICAS, Inc.
A Parsons Brinckerhoff Company
303 Second St., Suite 700N
San Francisco, CA 94107-1317

The State of California or its officers or agents shall not be responsible for the accuracy or completeness of electronic copies of this plan sheet.

Caltrans now has a web site! To get to the web site, go to http://www.dot.ca.gov

Caltrans Metric

REQUEST FOR INFORMATION NOT ADDRESSED IN THIS CCO REMAIN IN FORCE

MARK	DATE	DESCRIPTIONS	BY	CH'D	CCO#
D	2/29/12	ELECTRICAL CHANGES FOR ELEVATION 53 IMPROVEMENTS	TW	RG	190

REVISIONS

CONTRACT CHANGE ORDER NO. 190
SHEET 31 OF 37

CONDUIT DATA

Conduit No	Reference	Size	Type	Total Fill (mm²)	Allowable Fill (mm²)	Included Cable No.	Conductor Type
3WW23	E-264/264B, E-281 E-293, E-366	152	152mmX152mm Wireway NEMA 4X	4590.41	9241.60	2121	1-3/C + gnd #1/0, 600V, EPR Insulation
						2123-3	1-3/C + gnd #2, 600V, EPR Insulation
						A-3057-1	1-3/C + gnd #2, 600V, EPR Insulation
						2125-A	1-3/C + gnd #1/0, 600V, EPR Insulation
						UP210-2 & 4	1-4/C + gnd #8, 600V, EPR Insulation
						UP210-14&18	1-4/C + gnd #8, 600V, EPR Insulation
						UP210-16&20	1-4/C + gnd #8, 600V, EPR Insulation
						UP210-21	1-2/C + gnd #8, 600V, EPR Insulation
						UP210-23	1-2/C + gnd #8, 600V, EPR Insulation
						UP210-26	1-2/C + gnd #8, 600V, EPR Insulation
						UP210-28	1-2/C + gnd #12, 600V, EPR Insulation
						UP210-30	1-2/C + gnd #12, 600V, EPR Insulation
						UP210-10	1-2/C + gnd #10, 600V, EPR Insulation
						UP210-11	1-2/C + gnd #12, 600V, EPR Insulation
						GFR	250 kcMil, bare copper wire, stranded
3WW24	E-264/264B, E-281 E-293, E-366	152	152mmX152mm Wireway NEMA 4X	3364.53	9241.60	2123-3	1-3/C + gnd #2, 600V, EPR Insulation
						2125-A	1-3/C + gnd #1/0, 600V, EPR Insulation
						A-3057-1	1-3/C + gnd #2, 600V, EPR Insulation
						UP210-2 & 4	1-4/C + gnd #8, 600V, EPR Insulation
						UP210-14&18	1-4/C + gnd #8, 600V, EPR Insulation
						UP210-21	1-2/C + gnd #8, 600V, EPR Insulation
						UP210-23	1-2/C + gnd #8, 600V, EPR Insulation
						UP210-26	1-2/C + gnd #8, 600V, EPR Insulation
						UP210-10	1-2/C + gnd #10, 600V, EPR Insulation
						UP210-11	1-2/C + gnd #12, 600V, EPR Insulation
						GFR	250 kcMil, bare copper wire, stranded
3WW25	E-264/264B, E-281 E-293, E-366	152	152mmX152mm Wireway NEMA 4X	1622.90	9241.60	UP210-16&20	1-4/C + gnd #8, 600V, EPR Insulation
						UP210-28	1-2/C + gnd #12, 600V, EPR Insulation
						UP210-30	1-2/C + gnd #12, 600V, EPR Insulation
						UP210-10	1-2/C + gnd #10, 600V, EPR Insulation
						UP210-11	1-2/C + gnd #12, 600V, EPR Insulation
						2121	1-3/C + gnd #1/0, 600V, EPR Insulation
						GFR	250 kcMil, bare copper wire, stranded
3WW40	E-264/264B, E-281 E-293, E-366	102	102mmX102mm Wireway NEMA 4X	1201.07	5304.5	2119-2	4 pair #22, shielded pairs,300 V,PE insulation
						2120-1	1-2PR #18 Twisted Shielded w/overall shield
						2121-1	1-2PR #18 Twisted Shielded w/overall shield
						MVDSE02A	MVDS DLC
						MVDWE03A	MVDS DLC
						2204-8	3-Pr #16 with overall shield 600 V,PVC insulation
						2910-7	4 pair #24, overall shielded, 300V, PE insulation
						2910-8	4 pair #22, shielded pairs, 300V, PE insulation
						2910-12	4 pair #22, shielded pairs, 300V, PE insulation
						CCTVE01A	HCC
						CCTVE01B	HCC
						2910-11	1-3/C #16, 600V, EPR insulation
3WW41	E-264/264B, E-281 E-293, E-366	102	102mmX102mm Wireway NEMA 4X	72.50	5304.50	CCTVE01A	HCC

THIS PLAN ACCURATE FOR ELECTRICAL WORK ONLY.

CONDUIT DATA

Conduit No	Reference	Size	Type	Total Fill (mm²)	Allowable Fill (mm²)	Included Cable No.	Conductor Type
3WW42	E-264/264B, E-281 E-293, E-366	102	102mmX102mm Wireway NEMA 4X	553.28	5304.5	2120-1	1-2PR #18 Twisted Shielded w/overall shield
						2910-7	4 pair #24, overall shielded, 300V, PE insulation
						2910-8	4 pair #22, shielded pairs, 300V, PE insulation
						2910-12	4 pair #22, shielded pairs, 300V, PE insulation
						CCTVE01B	HCC
						2910-11	1-3/C #16, 600V, EPR insulation
3WW43	E-264/264B, E-281 E-293, E-366	102	102mmX102mm Wireway NEMA 4X	274.20	5304.5	2119-2	4 pair #22,shielded pairs,300 V,PE insulation
						2121-1	1-2PR #18 Twisted Shielded w/overall shield
						2204-8	3-Pr #16 with overall shield 600 V,PVC insulation

For continuation, see next sheet.

CONDUIT AND TRAY SCHEDULE

E-431B

STATE OF CALIFORNIA - DEPARTMENT OF TRANSPORTATION
Caltrans

DESIGN OVERSIGHT: BEHZAD GOLEMOHAMMADI

CALCULATED/DESIGNED BY | CHECKED BY | XX | DATE XX/XX | REVISED BY | DATE REVISED

LAST REVISION 12-21-11

DATE PLOTTED => 2/29/2012
TIME PLOTTED => 11:16:09 AM

FOR REDUCED PLANS ORIGINAL SCALE IS IN MILLIMETERS 0 20 40 60 80

DGN FILE =>I:\13103\MS\pse\SAS Struc\CCO\SAS CCO190 (Elev 53)\2-29-2012 DRAFT 1\04-0120f1_038SS02.dgn
USERNAME =>garciar

CU 04251 | EA 0120F1

DIST	COUNTY	ROUTE	KILOMETER POST TOTAL PROJECT	SHEET No	TOTAL SHEETS
04	SF	80	13.2/13.9	389 R7	1204

REGISTERED ELECTRICAL ENGINEER 12/19/02 DATE

12-6-04
PLANS APPROVAL DATE

PB POWER, Inc.
A Parsons Brinckerhoff Company
303 Second St., Suite 700N
San Francisco, CA 94107-1317

REGISTERED PROFESSIONAL ENGINEER JENS ERLINGSSON No. 6249 Exp. 9/30/06 ELECTRICAL STATE OF CALIFORNIA

The State of California or its officers or agents shall not be responsible for the accuracy or completeness of electronic copies of this plan sheet.

Caltrans now has a web site! To get to the web site, go to http://www.dot.ca.gov

Caltrans Metric

REQUEST FOR INFORMATION NOT ADDRESSED IN THIS CCO REMAIN IN FORCE

MARK	DATE	DESCRIPTIONS	BY	CH'D	CCO#
7	12/21/11	ELECTRICAL CHANGES FOR ELEVATION 53 IMPROVEMENTS	TW	RG	190
6	07/01/11	TOS MODIFICATIONS	RR	RG	81
5	01/07/11	ELECTRICAL WARNING SYSTEMS	TW	RG	61
4	03/26/10	DEHUMIDIFIER SCADA INTERFACE	RR	RG FW	130
3	08/03/09	ELECTRICAL WARNING SYSTEMS	RY RR	RG FW	61
2	03/30/09	SERVICE PLATFORM ELECTRICAL CHANGES	RR RY	RG MP	55
1	03/04/08	BARRIER MODIFICATIONS	JS BM	RG SE	44

REVISIONS

CONTRACT CHANGE ORDER NO. 190
SHEET 32 OF 37

REGISTERED PROFESSIONAL ENGINEER DAVID H. OTO No. 10699 Exp. 06/30/2013 ELECTRICAL STATE OF CALIFORNIA
FOR REVISION ONLY 7

REGISTERED PROFESSIONAL ENGINEER SYN YEE CHIN No. 18186 Exp. 09/30/2011 ELECTRICAL STATE OF CALIFORNIA
FOR REVISION ONLY 4 5 6

REGISTERED PROFESSIONAL ENGINEER FADI WALIEDDINE No. 11465 Exp. 12/31/2009 ELECTRICAL STATE OF CALIFORNIA
FOR REVISION ONLY 2 3

REGISTERED PROFESSIONAL ENGINEER S. A. ESTOQUE, JR. No. E-10151 Exp. 12/31/2009 ELECTRICAL STATE OF CALIFORNIA
FOR REVISION ONLY 1

CONDUIT DATA

Conduit No	Reference	Size	Type	Total Fill (mm²)	Allowable Fill (mm²)	Included Cable No.	Conductor Type
4224	E-115	78	RGS conduit	227.46	1935.24	Pull rope	Soft-Fiber Polyester
						UP105-9	1-2/C + gnd #8,600 V, EPR Insulation
4225	E-115	53	RGS conduit	317.80	681.55 (1)	Pull rope	Soft-Fiber Polyester
						1474-5B	1 - 6 pair, shielded #18 with overall shield, 300 V, PVC jacket
						1474-5A	1 - 6 pair, shielded #18 with overall shield, 300 V, PVC jacket
4226	E-115	78	RGS conduit	98.10	1935.24	Pull rope	Soft-Fiber Polyester
						1115-1	
4241	E-116	78	RGS conduit	446.81	1935.24	1255-2	1-3/C #16,600 V, EPR Insulation
						1202-3	1-7/C #16,600 V, EPR Insulation
						1202-2	1-3/C #14,600 V, EPR Insulation
						1202-1	1-2/C + gnd #10, 600 V, EPR Insulation
						Pull rope	Soft-Fiber Polyester
						1202-3A	1-2/C #14,600 V, EPR Insulation
4242	E-116	78	RGS conduit	821.29	1935.24		
						Pull rope	Soft-Fiber Polyester
						UP106-6	1-2/C + gnd #8, 600 V, EPR Insulation
						UP106-8	1-2/C + gnd #8, 600 V, EPR Insulation
						2202-1	1-2/C + gnd #10, 600 V, EPR Insulation
						2202-3A	1-2/C #14,600 V, EPR Insulation
4243	E-116	53	RGS conduit	527.18	879.42	Pull rope	Soft-Fiber Polyester
						1096	1-3/C + gnd #2,600 V, EPR Insulation
4244	E-116	53	RGS conduit	527.18	879.42	Pull rope	Soft-Fiber Polyester
						1097	1-3/C + gnd #2,600 V, EPR Insulation
4245	E-116	53	RGS conduit	0.00	1165.32 (1)	Pull rope	Soft-Fiber Polyester
4246	E-116	78	RGS conduit	222.94 (1)	1499.81	MVDSW03A	MVDS DLC
						~~Pull rope~~	~~Soft-Fiber Polyester~~
						CCTVE01B	HCC (1)
4248	E-116	78	RGS-PVC coated conduit	30.19	1935.24	Pull rope	Soft-Fiber Polyester
						1475-3B	12 Fiber, single mode fiberoptic cable
4261	E-117	78	RGS conduit	62.07	1935.24	Pull rope	Soft-Fiber Polyester
						1256-1	1-3/C #16,600 V, EPR Insulation
4262	E-117	78	RGS conduit	0.00	1935.24	Pull rope	Soft-Fiber Polyester
4263	E-117	53	RGS conduit	527.18	879.42	Pull rope	Soft-Fiber Polyester
						1098	1-3/C + gnd #2,600 V, EPR Insulation
4264	E-117	78	RGS conduit	0.00	1935.24	Pull rope	Soft-Fiber Polyester
4265	E-117	53	RGS conduit	150.44	1165.32 (1)	Pull rope	Soft-Fiber Polyester
						MVDSW04A	MVDS DLC
4266	E-117	78	RGS conduit	0.00	1935.24	Pull rope	Soft-Fiber Polyester
4268	E-117	78	RGS-PVC coated conduit	30.19	1935.24	Pull rope	Soft-Fiber Polyester
						1475-3C	12 Fiber, single mode fiberoptic cable
4281	E-118	78	RGS conduit	0.00	1935.24	Pull rope	Soft-Fiber Polyester

CONDUIT DATA

Conduit No	Reference	Size	Type	Total Fill (mm²)	Allowable Fill (mm²)	Included Cable No.	Conductor Type
4282	E-118	78	RGS conduit	932.14	1935.24		
						2201-1	1-2/C + gnd #10, 600 V, EPR Insulation
						2201-2	1-2/C + gnd #10, 600 V, EPR Insulation
						2201-6	1-2/C + gnd #10, 600 V, EPR Insulation
						Pull rope	Soft-Fiber Polyester
						2201-4	1-9/C #16,600 V, EPR Insulation
						2201-3	1-3/C #14,600 V, EPR Insulation
						S-3056-8	1-4/C #14,600 V, EPR Insulation
						2201-4A	1-2/C #14,600 V, EPR Insulation
						2201-4B	1-2/C #14,600 V, EPR Insulation
						2201-4C	1-2/C #14,600 V, EPR Insulation
4283	E-118	53	RGS conduit	527.18	879.42	1099	1-3/C + gnd #2,600 V, EPR Insulation
						Pull rope	Soft-Fiber Polyester
4284	E-118	78	RGS conduit	454.92	1935.24	Pull rope	Soft-Fiber Polyester
						UP108-3	1-2/C + gnd #8,600 V, EPR Insulation
						UP108-2	1-2/C + gnd #8,600 V, EPR Insulation
4285	E-118	53	RGS conduit	317.80	681.55 (1)	Pull rope	Soft-Fiber Polyester
						1474-8A	1 - 6 pair, shielded #18 with overall shield, 300 V, PVC jacket
						1474-8B	1 - 6 pair, shielded #18 with overall shield, 300 V, PVC jacket
4286	E-118	78	RGS conduit	98.10	1935.24	Pull rope	Soft-Fiber Polyester
						1117-1	1-2PR #18 Twisted Shielded w/overall Shield
4301	E-96	78	RGS conduit	366.10	1935.24	A-3001-1	1-3/C + gnd #4,600 V, EPR Insulation
						Pull rope	Soft-Fiber Polyester
4303	E-96	41	RGS conduit	0.00	534.55	Pull rope	Soft-Fiber Polyester
4304	E-96	41	RGS conduit	212.85	534.55	Pull rope	Soft-Fiber Polyester
						A-3001-2	3 + 1 gnd #6,#8, 600 V, RHH/RHW Insulation
4305	E-96	41	RGS conduit	0.00	534.55	Pull rope	Soft-Fiber Polyester
4306	E-96	41	RGS conduit	0.00	534.55	Pull rope	Soft-Fiber Polyester
4307	E-96	53	RGS conduit	0.00	879.42	Pull rope	Soft-Fiber Polyester
4308	E-96	53	RGS conduit	0.00	879.42	Pull rope	Soft-Fiber Polyester
4309	E-96	41	RGS conduit	0.00	534.55	Pull rope	Soft-Fiber Polyester
4310	E-96	41	RGS conduit	0.00	534.55	Pull rope	Soft-Fiber Polyester

For continuation, see next sheet.

CONDUIT AND TRAY SCHEDULE

E-434

REVISED BY	DATE REVISED
PBP	8/02

CALCULATED/DESIGNED BY	CHECKED BY
AB	8/02

DESIGN OVERSIGHT
BEHZAD GOLEMOHAMMADI

STATE OF CALIFORNIA - DEPARTMENT OF TRANSPORTATION
Caltrans

LAST REVISION 12-21-11
DATE PLOTTED => 20-DEC-2011
TIME PLOTTED => 17:14

FOR REDUCED PLANS ORIGINAL SCALE IS IN MILLIMETERS 0 20 40 60 80

DGN FILE =>04-0120f1_0389R07.dgn
USERNAME =>llorico

CU 04251 | EA 0120F1

DIST	COUNTY	ROUTE	KILOMETER POST TOTAL PROJECT	SHEET No	TOTAL SHEETS
04	SF	80	13.2/13.9	400 R7	1204

REGISTERED ELECTRICAL ENGINEER 12/19/02 DATE

12-6-04
PLANS APPROVAL DATE

REGISTERED PROFESSIONAL ENGINEER JENS ERLINGSSON No. 8249 Exp. 9/30/06 ELECTRICAL STATE OF CALIFORNIA

PB POWER, Inc.
A Parsons Brinckerhoff Company
303 Second St., Suite 700N
San Francisco, CA 94107-1317

The State of California or its officers or agents shall not be responsible for the accuracy or completeness of electronic copies of this plan sheet.

Caltrans now has a web site! To get to the web site, go to http://www.dot.ca.gov

REQUEST FOR INFORMATION NOT ADDRESSED IN THIS CCO REMAIN IN FORCE

MARK	DATE	DESCRIPTIONS	BY	CH'D	CCO#
7	12/21/11	ELECTRICAL CHANGES FOR ELEVATION 53 IMPROVEMENTS	TW	RG	190
6	03/18/11	BIKE PATH CONDUIT	TW	RG	73
5	01/07/11	ELECTRICAL WARNING SYSTEMS	TW	RG	61
4	06/11/10	BIKE PATH CONDUIT	TW	RG	73
3	12/11/09	TOWER UTILITY PANELS	SYC	RG FW	70
2	08/03/09	ELECTRICAL WARNING SYSTEMS	JS TW	RG FW	61
1	03/04/08	BARRIER MODIFICATIONS	JS BM	RG SE	44

REVISIONS

CONTRACT CHANGE ORDER NO. 190
SHEET 33 OF 37

REGISTERED PROFESSIONAL ENGINEER DAVID H. OTO No. 10699 Exp. 06/30/2013 ELECTRICAL STATE OF CALIFORNIA — FOR REVISION ONLY 7

REGISTERED PROFESSIONAL ENGINEER SYN YEE CHIN No. 18186 Exp. 09/30/2011 ELECTRICAL STATE OF CALIFORNIA — FOR REVISION ONLY 4 5 6

REGISTERED PROFESSIONAL ENGINEER FADI WALIEDDINE No. 11465 Exp. 12/31/2009 ELECTRICAL STATE OF CALIFORNIA — FOR REVISION ONLY 2 3

REGISTERED PROFESSIONAL ENGINEER S. A. ESTOQUE, JR. No. E-10151 Exp. 12/31/2009 ELECTRICAL STATE OF CALIFORNIA — FOR REVISION ONLY 1

CONDUIT DATA

Conduit No.	Reference	Size	Type	Total Fill (mm²)	Allowable Fill (mm²)	Included Cable No.	Conductor Type
5529	E-185	53	RGS conduit	0.00	879.42	Pull rope	Soft-Fiber Polyester
5530	E-185	41	RGS conduit	0.00	534.55	Pull rope	Soft-Fiber Polyester
5531	E-185	41	RGS conduit	0.00	534.55	Pull rope	Soft-Fiber Polyester
5532	E-185	41	RGS conduit	0.00	534.55	Pull rope	Soft-Fiber Polyester
5533	E-185	53	RGS conduit	0.00	879.42	Pull rope	Soft-Fiber Polyester
5534	E-185	53	RGS conduit	0.00	879.42	Pull rope	Soft-Fiber Polyester
5535	E-185	53	RGS conduit	0.00	879.42	Pull rope	Soft-Fiber Polyester
5536	E-185	53	RGS conduit	0.00	879.42	Pull rope	Soft-Fiber Polyester
5537	E-185	53	RGS conduit	0.00	879.42	Pull rope	Soft-Fiber Polyester
5543	E-185	41	RGS conduit	212.85	534.55	Pull rope	Soft-Fiber Polyester
						LP223-2A,4A	3 +1 gnd #6, #8, 600V, RHH/RHW Insulation
5544	E-185	41	RGS conduit	212.85	708.28	Pull rope	Soft-Fiber Polyester
						LP223-6A,8A	3 +1 gnd #6, #8, 600V, RHH/RHW Insulation
5545	E-185	53	RGS conduit	205.22 (7)	681.55	Pull rope (7)	Soft-Fiber Polyester
						UP208-6A	1-2/C + gnd #12, 600 V, EPR Insulation
						UP208-6B	1-2/C + gnd #12, 600 V, EPR Insulation
5546	E-212	103	RGS conduit	2780.99	3324.51	2391	3-1/C #4/0 + 1/C #1/0 gnd, 15 kV, EPR Insulation
						Pull rope	Soft-Fiber Polyester
5547	E-185	53	RGS conduit	0.00	879.42	Pull rope	Soft-Fiber Polyester
5548	E-185	53	RGS conduit	0.00	879.42	Pull rope	Soft-Fiber Polyester
5549	E-185	41	RGS conduit	0.00	534.55	Pull rope	Soft-Fiber Polyester
5550	E-185	41	RGS conduit	(7) 212.85	534.55	Pull rope (7)	Soft-Fiber Polyester
						A-2035-4-1	3 +1 gnd #6, #8, 600V, RHH/RHW Insulation
5551	E-185	53	RGS conduit	(7) 281.45	879.42	Pull rope (7)	Soft-Fiber Polyester
						A-2035-4	1-3/C + gnd #6, 600 V, EPR Insulation
5552	E-185	53	RGS conduit	227.46	879.42	UP208-2A	1-2/C + gnd #8, 600 V, EPR Insulation
						Pull rope	Soft-Fiber Polyester
5553	E-185	53	RGS conduit	98.10	879.42	Pull rope	Soft-Fiber Polyester
						2148	1 - 2 pair, shielded #18 with IS/OA, 300 V, PVC jacket
5554	E-185	53	RGS conduit	0.00	879.42	Pull rope	Soft-Fiber Polyester
5555	E-185	41	RGS conduit	527.18	534.55	A-2014-1	1-3/C + gnd #2, 600 V, EPR Insulation
						Pull rope	Soft-Fiber Polyester
5556	E-185	53	RGS conduit	814.11	879.42	LP223-6,8	1-3/C + gnd #6, 600 V, EPR Insulation
						Pull rope	Soft-Fiber Polyester
						UP208-6	1-2/C + gnd #8, 600 V, EPR Insulation
						LP223-2,4	1-3/C + gnd #6, 600 V, EPR Insulation
5557	E-186	53	RGS conduit	0.00	879.42	Pull rope	Soft-Fiber Polyester
5558	E-186	53	RGS conduit	0.00	879.42	Pull rope	Soft-Fiber Polyester
5597	E-185	53	RGS conduit	0.00	879.42	Pull rope	Soft-Fiber Polyester
7403	E-139	41	RGS conduit	0.00	534.55	Pull rope	Soft-Fiber Polyester
8001	E-293	41	RGS-PVC coated conduit	203.95	534.55	1201-6	1-2/C + gnd #10, 600 V, EPR Insulation
						Pull rope	Soft-Fiber Polyester
						1201-4C	1-2/C #14, 600 V, EPR Insulation
8002	E-293	41	RGS-PVC coated conduit	407.90	534.55	1201-6	1-2/C +gnd #10, 600 V, EPR Insulation
						1201-2	1-2/C + gnd #10, 600 V, EPR Insulation
						Pull rope	Soft-Fiber Polyester
						1201-4B	1-2/C #14, 600 V, EPR Insulation
						1201-4C	1-2/C #14, 600 V, EPR Insulation
8003	E-293	21	RGS-PVC coated conduit	102.61	185.01	2204-4	1-2/C + gnd #12, 600 V, EPR Insulation
						Pull rope	Soft-Fiber Polyester
8004	E-293	41	RGS-PVC coated conduit	203.95	534.55	1201-1	1-2/C + gnd #10, 600 V, EPR Insulation
						Pull rope	Soft-Fiber Polyester
						1201-4A	1-2/C #14, 600 V, EPR Insulation
8005	E-293	41	RGS-PVC coated conduit	(7) 229.49	414.28	2204-3	1-2/C + gnd #10, 600 V, EPR Insulation
						Pull rope	Soft-Fiber Polyester
						2204-4	1-2/C + gnd #12, 600 V, EPR Insulation (7)
8006	E-293, E-300	53	RGS-PVC coated conduit	(7) 433.44	879.42	2204-4	1-2/C + gnd #12, 600 V, EPR Insulation
						2204-3	1-2/C + gnd #10, 600 V, EPR Insulation
						1201-1	1-2/C + gnd #10, 600 V, EPR Insulation
						Pull rope	Soft-Fiber Polyester
						1201-4A	1-2/C #14, 600 V, EPR Insulation

CONDUIT DATA

Conduit No.	Reference	Size	Type	Total Fill (mm²)	Allowable Fill (mm²)	Included Cable No.	Conductor Type
8007	E-293, E-300	53	RGS-PVC coated conduit	(7) 229.49	684.55	Pull rope	Soft-Fiber Polyester
						2204-3	1-2/C + gnd #10, 600 V, EPR Insulation
						(7) 2204-4	1-2/C + gnd #12, 600 V, EPR Insulation
8008	E-293	53	RGS-PVC coated conduit	(7) 855.95	879.42	2204-9	1-3/C #14, 600 V, EPR Insulation
						2204-2	1-3/C #14, 600 V, EPR Insulation
						2204-1	1-3/C #14, 600 V, EPR Insulation
						2204-10	1-3/C #14, 600 V, EPR Insulation
						Pull rope	Soft-Fiber Polyester
						2204-11	1-3/C #14, 600 V, EPR Insulation
						UP210-3	1-2/C + gnd #8, 600 V, EPR Insulation
						2204-3	1-2/C + gnd #10, 600 V, EPR Insulation
						(7) 2204-4	1-2/C + gnd #12, 600 V, EPR Insulation
8010	E-293, E-264C	41	RGS-PVC coated conduit	203.95	534.55	1201-2	1-2/C + gnd #10, 600 V, EPR Insulation
						Pull rope	Soft-Fiber Polyester
						1201-4B	1-2/C #14, 600 V, EPR Insulation
8011	(7) E-293	(7) 53	RGS-PVC coated conduit	(7) 677.23	879.42	UP210-3	1-2/C + gnd #8, 600 V, EPR Insulation
						GFR	#2, bare copper wire, stranded
						2204-1	1-3/C #14, 600 V, EPR Insulation
						2204-2	1-3/C #14, 600 V, EPR Insulation
						2204-9	1-3/C #14, 600 V, EPR Insulation
						2204-10	1-3/C #14, 600 V, EPR Insulation
						2204-11	1-3/C #14, 600 V, EPR Insulation
						Pull rope	Soft-Fiber Polyester
(7) ~~8012~~							
8013	E-294	41	RGS-PVC coated conduit	203.95	414.28	2201-6	1-2/C + gnd #10, 600 V, EPR Insulation
						Pull rope	Soft-Fiber Polyester
						2201-4C	1-2/C #14, 600 V, EPR Insulation
8014	(7) E-293	53	RGS-PVC coated conduit	611.85	879.42	1201-6	1-2/C + gnd #10, 600 V, EPR Insulation
						1201-2	1-2/C + gnd #10, 600 V, EPR Insulation
						1201-1	1-2/C + gnd #10, 600 V, EPR Insulation
						Pull rope	Soft-Fiber Polyester
						1201-4A	1-2/C #14, 600 V, EPR Insulation
						1201-4B	1-2/C #14, 600 V, EPR Insulation
						1201-4C	1-2/C #14, 600 V, EPR Insulation
8015	E-293, E-300	41	RGS-PVC coated conduit	130.00	534.55	2204-8	3-Pr #16 with overall shield 600 V, PVC Insulation
						Pull rope	Soft-Fiber Polyester
8140	E-294	41	RGS-PVC coated conduit	203.95	534.55	Pull rope	Soft-Fiber Polyester
						2201-1	1-2/C + gnd #10, 600 V, EPR Insulation
						2201-4A	1-2/C #14, 600 V, EPR Insulation

For continuation, see next sheet.

CONDUIT AND TRAY SCHEDULE

E-445

REVISED BY | DATE REVISED
CALCULATED/DESIGNED BY | CHECKED BY
DESIGN OVERSIGHT
STATE OF CALIFORNIA - DEPARTMENT OF TRANSPORTATION

LAST REVISION 12-21-11
DATE PLOTTED => 20-DEC-2011
TIME PLOTTED => 17:14

FOR REDUCED PLANS ORIGINAL SCALE IS IN MILLIMETERS 0 20 40 60 80

DGN FILE =>04-0120f1_0400R07.dgn
USERNAME =>llorico

CU 04251 | EA 0120F1

DIST	COUNTY	ROUTE	KILOMETER POST TOTAL PROJECT	SHEET No	TOTAL SHEETS
04	SF	80	13.2/13.9	402 R2	1204

REGISTERED ELECTRICAL ENGINEER 12/19/02 DATE

12-6-04
PLANS APPROVAL DATE

REGISTERED PROFESSIONAL ENGINEER JENS ERLINGSSON No. 8249 Exp. 9/30/06 ELECTRICAL STATE OF CALIFORNIA

PB POWER, Inc.
A Parsons Brinckerhoff Company
303 Second St., Suite 700N
San Francisco, CA 94107-1317

The State of California or its officers or agents shall not be responsible for the accuracy or completeness of electronic copies of this plan sheet.

Caltrans now has a web site! To get to the web site, go to http://www.dot.ca.gov

Caltrans Metric

REQUEST FOR INFORMATION NOT ADDRESSED IN THIS CCO REMAIN IN FORCE

MARK	DATE	DESCRIPTIONS	BY	CH'D	CCO#
2	2/29/12	ELECTRICAL CHANGES FOR ELEVATION 53 IMPROVEMENTS	TW	RG	190
1	10/03/08	STRONG MOTION SYSTEM	RG	FW	74

REVISIONS

CONTRACT CHANGE ORDER NO. 190
SHEET 34 OF 37

REGISTERED PROFESSIONAL ENGINEER DAVID H. OTO No. 10699 Exp. 06/30/2013 ELECTRICAL STATE OF CALIFORNIA
FOR REVISION ONLY 2

REGISTERED PROFESSIONAL ENGINEER FADI WALIEDDINE No. 11465 Exp. 12/31/2009 ELECTRICAL STATE OF CALIFORNIA
FOR REVISION ONLY 1

CONDUIT DATA

Conduit No	Reference	Size	Type	Total Fill (mm²)	Allowable Fill (mm²)	Included Cable No.	Conductor Type
9022	E-372	27	RGS conduit	94.84	229.03	2900-432A	4 pair #22, shielded pairs, FEP insulation
						Pull rope	Soft-Fiber Polyester
						2900-432B	4 pair #22, shielded pairs, FEP insulation
9023	E-373	27	RGS conduit	142.26	229.03	Pull rope	Soft-Fiber Polyester
						2900-472C	4 pair #22, shielded pairs, FEP insulation
						2900-472B	4 pair #22, shielded pairs, FEP insulation
						2900-472A	4 pair #22, shielded pairs, FEP insulation
9024	E-373	27	RGS conduit	94.84	229.03	Pull rope	Soft-Fiber Polyester
						2900-462B	4 pair #22, shielded pairs, FEP insulation
						2900-462A	4 pair #22, shielded pairs, FEP insulation
9025	E-373	27	RGS conduit	94.84	229.03	Pull rope	Soft-Fiber Polyester
						2900-452B	4 pair #22, shielded pairs, FEP insulation
						2900-452A	4 pair #22, shielded pairs, FEP insulation
9026	E-373	27	RGS conduit	142.26	229.03	Pull rope	Soft-Fiber Polyester
						2900-442B	4 pair #22, shielded pairs, FEP insulation
						2900-442A	4 pair #22, shielded pairs, FEP insulation
						2900-442C	4 pair #22, shielded pairs, FEP insulation
9027	E-362	41	RGS-PVC coated conduit	284.52	534.55	2900-162B	4 pair #22, shielded pairs, FEP insulation
						2900-152C	4 pair #22, shielded pairs, FEP insulation
						2900-152B	4 pair #22, shielded pairs, FEP insulation
						2900-152A	4 pair #22, shielded pairs, FEP insulation
						2900-162A	4 pair #22, shielded pairs, FEP insulation
						2900-142A	4 pair #22, shielded pairs, FEP insulation
						Pull rope	Soft-Fiber Polyester
9050	E-366A	27	RGS-PVC coated conduit	47.42	229.03	2900-243A	4 pair #22, shielded pairs, FEP insulation
						Pull rope	Soft-Fiber Polyester
9051	E-366A	27	RGS-PVC coated conduit	189.68	229.03	2900-253A	4 pair #22, shielded pairs, FEP insulation
						2900-253B	4 pair #22, shielded pairs, FEP insulation
						2900-243A	4 pair #22, shielded pairs, FEP insulation
						Pull rope	Soft-Fiber Polyester
						2900-253C	4 pair #22, shielded pairs, FEP insulation
9052	E-366A	27	RGS-PVC coated conduit	94.84	229.03	2900-263A	4 pair #22, shielded pairs, FEP insulation
						2900-263B	4 pair #22, shielded pairs, FEP insulation
						Pull rope	Soft-Fiber Polyester
9053	E-366A	27	RGS-PVC coated conduit	142.26	229.03	2900-253A	4 pair #22, shielded pairs, FEP insulation
						Pull rope	Soft-Fiber Polyester
						2900-253C	4 pair #22, shielded pairs, FEP insulation
						2900-253B	4 pair #22, shielded pairs, FEP insulation
9054	E-366A	41	RGS-PVC coated conduit	237.10	534.55	2900-233A	4 pair #22, shielded pairs, FEP insulation
						2900-233C	4 pair #22, shielded pairs, FEP insulation
						2900-373A	4 pair #22, shielded pairs, FEP insulation
						Pull rope	Soft-Fiber Polyester
						2900-373B	4 pair #22, shielded pairs, FEP insulation
						2900-233B	4 pair #22, shielded pairs, FEP insulation
9055	E-366	41	RGS-PVC coated conduit	237.10	534.55	2900-303C	4 pair #22, shielded pairs, FEP insulation
						Pull rope	Soft-Fiber Polyester
						2900-303D	4 pair #22, shielded pairs, FEP insulation
						2900-303B	4 pair #22, shielded pairs, FEP insulation
						2900-303A	4 pair #22, shielded pairs, FEP insulation
						2900-303E	4 pair #22, shielded pairs, FEP insulation
9056	E-264E/285/285B (2)	27	RGS-PVC coated conduit	145.27 (2)	177.49	Pull rope	Soft-Fiber Polyester
						UR210-12	1-2/C + gnd #12, 600 V, EPR insulation
						GFR	#2 Bare copper wire, stranded
9057	E-285B (2)	41	RGS-PVC coated conduit	382.68 (2)	534.55	2910-7	4 pair #24, overall shielded, 300 V, PE insulation
						2910-8	4 pair #22, shielded pairs, 300 V, PE insulation
						2910-12	4 pair #22, shielded pairs, 300 V, PE insulation
						2910-11	1-3/C #16, 600 V, PE insulation (2)
9057D	E-264E, E-285	41	RGS-PVC coated conduit	320.61	534.55	Pull rope	Soft-Fiber Polyester
						2910-7	4 pair #24, overall shielded, 300 V, PE insulation
						2910-8	4 pair #22, shielded pairs, 300 V, PE insulation
						2910-12	4 pair #22, shielded pairs, 300 V, PE insulation
9057E (2)	E-264E, E-285	21	RGS-PVC coated conduit	62.07	303.46	Pull rope	Soft-Fiber Polyester
						2910-11	1-3/C #16, 600 V, PE insulation
9058	E-285, E-285B	27	RGS-PVC coated conduit	0.00	229.03	Pull rope	Soft-Fiber Polyester
9059	E-285, E-285B (2)	78	RGS-PVC coated conduit	1849.38	1935.24	2900-303C	4 pair #22, shielded pairs, FEP insulation
						2900-313C	4 pair #22, shielded pairs, FEP insulation
						2900-323C	4 pair #22, shielded pairs, FEP insulation
						2900-323D	4 pair #22, shielded pairs, FEP insulation

CONDUIT DATA

Conduit No	Reference	Size	Type	Total Fill (mm²)	Allowable Fill (mm²)	Included Cable No.	Conductor Type
9059	E-366	78	RGS-PVC coated conduit	1849.38	1935.24	2900-323A	4 pair #22, shielded pairs, FEP insulation
(con't)						2900-323E	4 pair #22, shielded pairs, FEP insulation
						2900-323B	4 pair #22, shielded pairs, FEP insulation
						2900-313B	4 pair #22, shielded pairs, FEP insulation
						2900-313A	4 pair #22, shielded pairs, FEP insulation
						2900-303D	4 pair #22, shielded pairs, FEP insulation
						2900-373A	4 pair #22, shielded pairs, FEP insulation
						2900-303B	4 pair #22, shielded pairs, FEP insulation
						2900-303A	4 pair #22, shielded pairs, FEP insulation
						2900-263B	4 pair #22, shielded pairs, FEP insulation
						2900-303E	4 pair #22, shielded pairs, FEP insulation
						2900-353A	4 pair #22, shielded pairs, FEP insulation
						Pull rope	Soft-Fiber Polyester
						2900-363C	4 pair #22, shielded pairs, FEP insulation
						2900-363B	4 pair #22, shielded pairs, FEP insulation
						2900-363A	4 pair #22, shielded pairs, FEP insulation
						2900-353F	4 pair #22, shielded pairs, FEP insulation
						2900-353E	4 pair #22, shielded pairs, FEP insulation
						2900-223C	4 pair #22, shielded pairs, FEP insulation
						2900-353B	4 pair #22, shielded pairs, FEP insulation
						2900-373B	4 pair #22, shielded pairs, FEP insulation
						2900-263A	4 pair #22, shielded pairs, FEP insulation
						2900-223B	4 pair #22, shielded pairs, FEP insulation
						2900-223A	4 pair #22, shielded pairs, FEP insulation
						2900-213C	4 pair #22, shielded pairs, FEP insulation
						2900-213B	4 pair #22, shielded pairs, FEP insulation
						2900-213A	4 pair #22, shielded pairs, FEP insulation
						2900-353C	4 pair #22, shielded pairs, FEP insulation
						2900-253C	4 pair #22, shielded pairs, FEP insulation
						2900-253B	4 pair #22, shielded pairs, FEP insulation
						2900-253A	4 pair #22, shielded pairs, FEP insulation
						2900-243A	4 pair #22, shielded pairs, FEP insulation
						2900-233A	4 pair #22, shielded pairs, FEP insulation
						2900-233C	4 pair #22, shielded pairs, FEP insulation
						2900-233B	4 pair #22, shielded pairs, FEP insulation
						2900-353D	4 pair #22, shielded pairs, FEP insulation
9060	E-366, E-367	53 (2)	RGS-PVC coated conduit	237.10 (2)	879.42	Pull rope	Soft-Fiber Polyester
						2900-303C	4 pair #22, shielded pairs, FEP insulation
						2900-303D	4 pair #22, shielded pairs, FEP insulation
						2900-303B	4 pair #22, shielded pairs, FEP insulation
						2900-303A	4 pair #22, shielded pairs, FEP insulation
						2900-303E	4 pair #22, shielded pairs, FEP insulation

For continuation, see next sheet.

CONDUIT AND TRAY SCHEDULE

E-447

REVISED BY	DATE REVISED	DATE 8/02	PBP 8/02
CALCULATED/DESIGNED BY	CHECKED BY	AB	
DESIGN OVERSIGHT	BEHZAD GOLEMOHAMMADI		

STATE OF CALIFORNIA - DEPARTMENT OF TRANSPORTATION
Caltrans

LAST REVISION 12-21-11
DATE PLOTTED => 2/29/2012
TIME PLOTTED => 11:16:38 AM

FOR REDUCED PLANS ORIGINAL SCALE IS IN MILLIMETERS 0 20 40 60 80

DGN FILE =>T:\13103\WS\pse\SAS Struc\CCO\SAS CCO190 (Elev 53)\2-29-2012 DRAFT 1\04-0120f1_0402R02.dgn
USERNAME =>garciar

CU 04251 | EA 0120F1

CONDUIT DATA

Conduit No	Reference	Size	Type	Total Fill (mm2)	Allowable Fill (mm2)	Included Cable No.	Conductor Type
9060 (con't)							
			3				
9061	E-367	27	RGS-PVC coated conduit	142.26	229.03	2900-313C	4 pair #22, shielded pairs, FEP insulation
						Pull rope	Soft-Fiber Polyester
						2900-313B	4 pair #22, shielded pairs, FEP insulation
						2900-313A	4 pair #22, shielded pairs, FEP insulation
9062	E-365, E-367	78	RGS-PVC coated conduit	948.40	1935.24	Pull rope	Soft-Fiber Polyester
						2900-353B	4 pair #22, shielded pairs, FEP insulation
						2900-353C	4 pair #22, shielded pairs, FEP insulation
						2900-353D	4 pair #22, shielded pairs, FEP insulation
						2900-353F	4 pair #22, shielded pairs, FEP insulation
						2900-213B	4 pair #22, shielded pairs, FEP insulation
						2900-363C	4 pair #22, shielded pairs, FEP insulation
						2900-363B	4 pair #22, shielded pairs, FEP insulation
						2900-353E	4 pair #22, shielded pairs, FEP insulation
						2900-353A	4 pair #22, shielded pairs, FEP insulation
						2900-223C	4 pair #22, shielded pairs, FEP insulation
						2900-223B	4 pair #22, shielded pairs, FEP insulation
						2900-213C	4 pair #22, shielded pairs, FEP insulation
						2900-213A	4 pair #22, shielded pairs, FEP insulation
						2900-323E	4 pair #22, shielded pairs, FEP insulation
						2900-323D	4 pair #22, shielded pairs, FEP insulation
						2900-323C	4 pair #22, shielded pairs, FEP insulation
						2900-323B	4 pair #22, shielded pairs, FEP insulation
						2900-323A	4 pair #22, shielded pairs, FEP insulation
						2900-363A	4 pair #22, shielded pairs, FEP insulation
						2900-223A	4 pair #22, shielded pairs, FEP insulation
9064	E-367	41	RGS-PVC coated conduit	237.10	534.55	2900-323C	4 pair #22, shielded pairs, FEP insulation
						2900-323D	4 pair #22, shielded pairs, FEP insulation
						2900-323A	4 pair #22, shielded pairs, FEP insulation
						2900-323B	4 pair #22, shielded pairs, FEP insulation
						Pull rope	Soft-Fiber Polyester
						2900-323E	4 pair #22, shielded pairs, FEP insulation
9065	E-264A, E-366	27	RGS-PVC coated conduit	47.42	229.03	Pull rope	Soft-Fiber Polyester
						2900-292A	4 pair #22, shielded pairs, FEP insulation
9067	E-366A	27	RGS-PVC coated conduit	94.84	229.03	2900-373B	4 pair #22, shielded pairs, FEP insulation
						2900-373A	4 pair #22, shielded pairs, FEP insulation
						Pull rope	Soft-Fiber Polyester
9068	E-366A	41	RGS-PVC coated conduit	284.52	534.55		
						2900-263B	4 pair #22, shielded pairs, FEP insulation
						2900-263A	4 pair #22, shielded pairs, FEP insulation
						2900-253C	4 pair #22, shielded pairs, FEP insulation
						2900-253B	4 pair #22, shielded pairs, FEP insulation
						2900-253A	4 pair #22, shielded pairs, FEP insulation
						2900-243A	4 pair #22, shielded pairs, FEP insulation
						Pull rope	Soft-Fiber Polyester
9069	E-374	27	RGS conduit	47.42	229.03	Pull rope	Soft-Fiber Polyester
						2900-482A	4 pair #22, shielded pairs, FEP insulation
9070	E-366A	27	RGS-PVC coated conduit	142.26	229.03	2900-233A	4 pair #22, shielded pairs, FEP insulation
						2900-233B	4 pair #22, shielded pairs, FEP insulation
						2900-233C	4 pair #22, shielded pairs, FEP insulation

REQUEST FOR INFORMATION NOT ADDRESSED IN THIS CCO REMAIN IN FORCE

MARK	DATE	DESCRIPTIONS	BY	CH'D	CCO#
3	2/29/12	ELECTRICAL CHANGES FOR ELEVATION 53 IMPROVEMENTS	TW	RG	190
2	03/30/09	SERVICE PLATFORM ELECTRICAL CHANGES	RR RY	RG MP	55
1	10/03/08	STRONG MOTION SYSTEM	RG	FW	74

REVISIONS

CONTRACT CHANGE ORDER NO. 190
SHEET 35 OF 37

Caltrans Metric

DIST	COUNTY	ROUTE	KILOMETER POST TOTAL PROJECT	SHEET No	TOTAL SHEETS
04	SF	80	13.2/13.9	403 R3	1204

REGISTERED ELECTRICAL ENGINEER 12/19/02 DATE

12-6-04
PLANS APPROVAL DATE

REGISTERED PROFESSIONAL ENGINEER JENS ERLINGSSON No. 8249 Exp. 9/30/06 ELECTRICAL STATE OF CALIFORNIA

PB POWER, Inc.
A Parsons Brinckerhoff Company
303 Second St., Suite 700N
San Francisco, CA 94107-1317

The State of California or its officers or agents shall not be responsible for the accuracy or completeness of electronic copies of this plan sheet.

Caltrans now has a web site! To get to the web site, go to http://www.dot.ca.gov

REGISTERED PROFESSIONAL ENGINEER DAVID H. OTO No. 10699 Exp. 06/30/2013 ELECTRICAL STATE OF CALIFORNIA

FOR REVISION ONLY 3

REGISTERED PROFESSIONAL ENGINEER FADI WALIEDDINE No. 11465 Exp. 12/31/2009 ELECTRICAL STATE OF CALIFORNIA

FOR REVISION ONLY 1 2

CONDUIT DATA

Conduit No	Reference	Size	Type	Total Fill (mm2)	Allowable Fill (mm2)	Included Cable No.	Conductor Type
9230	E-115	78	RGS-PVC coated conduit	1801.96	1935.24	2900-442B	4 pair #22, shielded pairs, FEP insulation
						2900-402A	4 pair #22, shielded pairs, FEP insulation
						2900-412A	4 pair #22, shielded pairs, FEP insulation
						2900-412B	4 pair #22, shielded pairs, FEP insulation
						2900-412C	4 pair #22, shielded pairs, FEP insulation
						2900-422A	4 pair #22, shielded pairs, FEP insulation
						2900-422B	4 pair #22, shielded pairs, FEP insulation
						2900-442A	4 pair #22, shielded pairs, FEP insulation
						2900-332A	4 pair #22, shielded pairs, FEP insulation
						2900-442C	4 pair #22, shielded pairs, FEP insulation
						2900-452A	4 pair #22, shielded pairs, FEP insulation
						2900-452B	4 pair #22, shielded pairs, FEP insulation
						2900-482A	4 pair #22, shielded pairs, FEP insulation
						2910-2	4 pair #22, shielded pairs, FEP insulation
						2910-3	4 pair #22, shielded pairs, FEP insulation
						Pull rope	Soft-Fiber Polyester
						2900-382C	4 pair #22, shielded pairs, FEP insulation
						2900-432A	4 pair #22, shielded pairs, FEP insulation
						2900-172A	4 pair #22, shielded pairs, FEP insulation
						2900-152A	4 pair #22, shielded pairs, FEP insulation
						2900-332C	4 pair #22, shielded pairs, FEP insulation
						2900-142A	4 pair #22, shielded pairs, FEP insulation
						2900-382B	4 pair #22, shielded pairs, FEP insulation
						2900-152B	4 pair #22, shielded pairs, FEP insulation
						2900-152C	4 pair #22, shielded pairs, FEP insulation
						2900-162B	4 pair #22, shielded pairs, FEP insulation
						2900-172B	4 pair #22, shielded pairs, FEP insulation
						2900-172C	4 pair #22, shielded pairs, FEP insulation
						2900-272C	4 pair #22, shielded pairs, FEP insulation
						2900-382A	4 pair #22, shielded pairs, FEP insulation
						2900-162A	4 pair #22, shielded pairs, FEP insulation
						2900-292A	4 pair #22, shielded pairs, FEP insulation
						2900-192A	4 pair #22, shielded pairs, FEP insulation
						2900-272B	4 pair #22, shielded pairs, FEP insulation
						2900-272A	4 pair #22, shielded pairs, FEP insulation
						2900-192C	4 pair #22, shielded pairs, FEP insulation
						2900-192B	4 pair #22, shielded pairs, FEP insulation
						2900-332B	4 pair #22, shielded pairs, FEP insulation
					3	2900-432B	4 pair #22, shielded pairs, FEP insulation
9230A	E-115	78	RGS-PVC coated conduit		1935.24	Pull rope	Soft-Fiber Polyester
9231A	E-115	78	RGS-PVC coated conduit		1935.24	Pull rope	Soft-Fiber Polyester
9231B	E-115	78	RGS-PVC coated conduit		1935.24	Pull rope	Soft-Fiber Polyester
9232A	E-115	78	RGS-PVC coated conduit		1935.24	Pull rope	Soft-Fiber Polyester

For continuation, see next sheet.

CONDUIT AND TRAY SCHEDULE

E-448

DATE	REVISED BY	DATE	REVISED
8/02	PBP	8/02	AB

CALCULATED/DESIGNED BY — CHECKED BY

DESIGN OVERSIGHT — BEHZAD GOLEMOHAMMADI

STATE OF CALIFORNIA - DEPARTMENT OF TRANSPORTATION
Caltrans

© COPYRIGHT

FOR REDUCED PLANS ORIGINAL SCALE IS IN MILLIMETERS 0 20 40 60 80

DGN FILE =>T:\13103\MS\pse\SAS Struc\CCO\SAS CC0190 (Elev 53)\2012.02.29 - Draft 2_Issued for Submittal\04-0120f1_0403R03.dgn
USERNAME =>garciar

CU 04251 | EA 0120F1

LAST REVISION 12-21-11
DATE PLOTTED => 3/1/2012
TIME PLOTTED => 12:24:13 PM

DIST	COUNTY	ROUTE	KILOMETER POST TOTAL PROJECT	SHEET No	TOTAL SHEETS
04	SF	80	13.2/13.9	404 R1	1204

REGISTERED ELECTRICAL ENGINEER 12/19/02 DATE

12-6-04
PLANS APPROVAL DATE

REGISTERED PROFESSIONAL ENGINEER JENS ERLINGSSON No. 8249 Exp. 9/30/06 ELECTRICAL STATE OF CALIFORNIA

PB POWER, Inc.
A Parsons Brinckerhoff Company
303 Second St., Suite 700N
San Francisco, CA 94107-1317

The State of California or its officers or agents shall not be responsible for the accuracy or completeness of electronic copies of this plan sheet.

Caltrans now has a web site! To get to the web site, go to http://www.dot.ca.gov

Caltrans Metric

CONDUIT DATA

Conduit No	Reference	Size	Type	Total Fill (mm2)	Allowable Fill (mm2)	Included Cable No.	Conductor Type
9231	E-115	53	RGS conduit	842.23	879.42	2900-472B	4 pair #22, shielded pairs, FEP insulation
						2910-8	4 pair #22, shielded pairs, 300 V, PE insulation
						Pull rope	Soft-Fiber Polyester
						2910-7	4 pair #24, overall shielded, 300 V, PE insulation
						2910-10	4 pair #22, shielded pairs, 300 V, PE insulation
						2900-472C	4 pair #22, shielded pairs, FEP insulation
						2900-472A	4 pair #22, shielded pairs, FEP insulation
						2900-462B	4 pair #22, shielded pairs, FEP insulation
						2900-462A	4 pair #22, shielded pairs, FEP insulation
						2900-392A	4 pair #22, shielded pairs, FEP insulation
						2900-342A	4 pair #22, shielded pairs, FEP insulation
						2900-282A	4 pair #22, shielded pairs, FEP insulation
						2900-202A	4 pair #22, shielded pairs, FEP insulation
						2900-182A	4 pair #22, shielded pairs, FEP insulation
						2900-182B	4 pair #22, shielded pairs, FEP insulation
9232	E-115	78	RGS conduit	183.81	1499.81	2910-12	4 pair #22, shielded pairs, FEP insulation
						2910-11	1-3/C #16, 600V, EPR Insulation

1

REGISTERED PROFESSIONAL ENGINEER DAVID H. OTO No. 10699 Exp. 06/30/2013 ELECTRICAL STATE OF CALIFORNIA

FOR REVISION ONLY
1

REQUEST FOR INFORMATION NOT ADDRESSED IN THIS CCO REMAIN IN FORCE

MARK	DATE	DESCRIPTIONS	BY	CH'D	CCO#
1	2/29/12	ELECTRICAL CHANGES FOR ELEVATION 53 IMPROVEMENTS	TW	RG	190

REVISIONS

CONTRACT CHANGE ORDER NO. 190
SHEET 36 OF 37

CONDUIT AND TRAY SCHEDULE

E-449

REVISED BY	DATE REVISED
PBP	8/02

CALCULATED/DESIGNED BY	CHECKED BY
AB	

DESIGN OVERSIGHT
BEHZAD GOLEMOHAMMADI

STATE OF CALIFORNIA - DEPARTMENT OF TRANSPORTATION
Caltrans

LAST REVISION 00-00-00
DATE PLOTTED => 2/29/2012
TIME PLOTTED => 11:17:46 AM

FOR REDUCED PLANS ORIGINAL SCALE IS IN MILLIMETERS 0 20 40 60 80

DGN FILE =>I:\13103\MS\pse\SAS Struc\CCO\SAS CCO190 (Elev 53)\2-29-2012 DRAFT 1\04-0120F1_0404R01.dgn
USERNAME =>garciar

CU 04251 | EA 0120F1

DIST	COUNTY	ROUTE	KILOMETER POST TOTAL PROJECT	SHEET No	TOTAL SHEETS
04	SF	80	13.2/13.9	407 R7	1204

REGISTERED ELECTRICAL ENGINEER 12/19/02 DATE

12-6-04
PLANS APPROVAL DATE

REGISTERED PROFESSIONAL ENGINEER JENS ERLINGSSON No. 8249 Exp. 9/30/06 ELECTRICAL STATE OF CALIFORNIA

PB POWER, Inc.
A Parsons Brinckerhoff Company
303 Second St., Suite 700N
San Francisco, CA 94107-1317

The State of California or its officers or agents shall not be responsible for the accuracy or completeness of electronic copies of this plan sheet.

Caltrans now has a web site! To get to the web site, go to http://www.dot.ca.gov

Caltrans Metric

REQUEST FOR INFORMATION NOT ADDRESSED IN THIS CCO REMAIN IN FORCE

MARK	DATE	DESCRIPTIONS	BY	CH'D	CCO#
7	2/29/12	ELECTRICAL CHANGES FOR ELEVATION 53 IMPROVEMENTS	TW	RG	190
6	11/07/11	PLATFORM MODIFICATIONS	RM	DO	206
5	07/01/11	TOS MODIFICATIONS	RR	RG	81
4	01/07/11	ELECTRICAL WARNING SYSTEMS	TW	RG	61
3	03/26/10	DEHUMIDIFIER SCADA INTERFACE	RR	RG FW	130
2	02/25/08	CABLE TRAY CHANGES	RG	SE	42S1
1	02/19/08	ELECTRICAL MODIFICATIONS	MP EL	RR	42

REVISIONS

CONTRACT CHANGE ORDER NO. 190
SHEET 37 OF 37

REGISTERED PROFESSIONAL ENGINEER DAVID H. OTO No. 10699 Exp. 06/30/2013 ELECTRICAL STATE OF CALIFORNIA — 6 7 — FOR REVISION ONLY

REGISTERED PROFESSIONAL ENGINEER SYN YEE CHIN No. 18186 Exp. 09/30/2011 ELECTRICAL STATE OF CALIFORNIA — 3 4 5 — FOR REVISION ONLY

REGISTERED PROFESSIONAL ENGINEER S. A. ESTOQUE, JR. No. E-10151 Exp. 12/31/2008 ELECTRICAL STATE OF CALIFORNIA — 1 2 — FOR REVISION ONLY

CONDUIT DATA

Conduit No	Reference	Size	Type	Total Fill (mm2)	Allowable Fill (mm2)	Included Cable No.	Conductor Type
3177A	E-264A	78	Liquidtight flex metal conduit	1281.36	1494.96	2119-B-1	1-3/C + gnd #1/0, 600V, EPR insulation
						A-3057-1	1-3/C + gnd #2, 600V, EPR Insulation
3177B	E-264A	78	Liquidtight flex metal conduit	1804.65	1928.98	2119-B	3+1gnd, #250 kcmil, #1/0, 600V, EPR insulation
						A-3057-1	1-3/C + gnd #2, 600V, EPR Insulation
3278A	E-264A	78	Liquidtight flex metal conduit	1808.07	1928.98	2123-2	1-3/C + gnd #2, 600V, EPR Insulation
						2123-3	1-3/C + gnd #2, 600V, EPR Insulation
						2123	1-3/C + gnd #1/0, 600V, EPR Insulation
3278B	E-264A	78	Liquidtight flex metal conduit	1808.07	1928.98	2123-2	1-3/C + gnd #2, 600V, EPR Insulation
						2123-3	1-3/C + gnd #2, 600V, EPR Insulation
						2123	1-3/C + gnd #1/0, 600V, EPR Insulation
3294A	E-264A	78	Liquidtight flex metal conduit	335.06	1494.96	Pull rope	Soft-fiber polyester
						GND	1-#250 kcmil, bare copper
						GND	1-#250 kcmil, bare copper
3294B	E-264A	78	Liquidtight flex metal conduit	335.06	1494.96	Pull rope	Soft-fiber polyester
						GND	1-#250 kcmil, bare copper
						GND	1-#250 kcmil, bare copper
3319A	E-264A	78	Liquidtight flex metal conduit	1508.36	1928.98	2121	1-3/C + gnd #1/0, 600V, EPR Insulation
						2120	1-3/C + gnd #1/0, 600V, EPR Insulation
3319B	E-264A	78	Liquidtight flex metal conduit	1508.36	1928.98	2121	1-3/C + gnd #1/0, 600V, EPR Insulation
						2120	1-3/C + gnd #1/0, 600V, EPR Insulation
3322A	E-264A	78	Liquidtight flex metal conduit	754.18	2555.90	2119-A-1	1-3/C + gnd #1/0, 600V, EPR insulation
3322B	E-264A	78	Liquidtight flex metal conduit	1227.47	1928.98	2119-A	3+1gnd, #250 kcmil, #1/0, 600V, EPR insulation
3330A	E-264A	78	Liquidtight flex metal conduit	0.00	1928.98	Pull rope	Soft-fiber polyester
3330B	E-264A	78	Liquidtight flex metal conduit	0.00	1928.98	Pull rope	Soft-fiber polyester
3339A	E-264A	78	Liquidtight flex metal conduit	754.18	2555.90	2125-A	1-3/C + gnd, #1/0, 600V, EPR insulation
3339B	E-264A	78	Liquidtight flex metal conduit	1277.47	1928.98	2125	3+1gnd, #250 kcmil, #1/0, 600V, EPR insulation
3348A	E-264A	78	Liquidtight flex metal conduit		1928.98	Pull rope	Soft-fiber polyester
3348B	E-264A	78	Liquidtight flex metal conduit		1928.98	Pull rope	Soft-fiber polyester
3349A	E-264A	78	Liquidtight flex metal conduit	324.88	1928.98	Pull rope	Soft-fiber polyester
						2120-1	1-2 pair #18 twisted shielded w/overall shield
						2121-1	1-2 pair #18 twisted shielded w/overall shield
						2204-8	1-3 pair #16 twisted shielded w/overall shield
3349B	E-264A	78	Liquidtight flex metal conduit	324.88	1928.98	Pull rope	Soft-fiber polyester
						2120-1	1-2 pair #18 twisted shielded w/overall shield
						2121-1	1-2 pair #18 twisted shielded w/overall shield
						2204-8	1-3 pair #16 twisted shielded w/overall shield
3359A	E-264A	78	Liquidtight flex metal conduit	457.88	1928.98	CCTVE01A	HCC
						MVDSE02A	MVDS DLC
						MVDSE03A	MVDS DLC
						CCTVE01B	HCC
3359B	E-264A	78	Liquidtight flex metal conduit	457.88	1928.98	CCTVE01A	HCC
						MVDSE02A	MVDS DLC
						MVDSE03A	MVDS DLC
						CCTVE01B	HCC

CONDUIT DATA

Conduit No	Reference	Size	Type	Total Fill (mm2)	Allowable Fill (mm2)	Included Cable No.	Conductor Type
8011A	E-264A	78	Liquidtight flex metal conduit	1029.64	1928.98	Pull rope	Soft-fiber polyester
						1201-1	1-2/C + gnd #10, 600V, EPR Insulation
						1201-2	1-2/C + gnd #10, 600V, EPR Insulation
						1201-6	1-2/C + gnd #10, 600V, EPR Insulation
						1201-4A	1-2/C #14, 600V, EPR Insulation
						1201-4B	1-2/C #14, 600V, EPR Insulation
						1201-4C	1-2/C #14, 600V, EPR Insulation
						2204-2	1-3/C + gnd #14, 600V, EPR Insulation
						2204-1	1-3/C #14, 600V, EPR Insulation
						2204-9	1-3/C #14, 600V, EPR Insulation
						2204-10	1-3/C #14, 600V, EPR Insulation
						2204-11	1-3/C #14, 600V, EPR Insulation
8011B	E-264A	78	Liquidtight flex metal conduit	1029.64	1928.98	Pull rope	Soft-fiber polyester
						1201-1	1-2/C + gnd #10, 600V, EPR Insulation
						1201-2	1-2/C + gnd #10, 600V, EPR Insulation
						1201-6	1-2/C + gnd #10, 600V, EPR Insulation
						1201-4A	1-2/C #14, 600V, EPR Insulation
						1201-4B	1-2/C #14, 600V, EPR Insulation
						1201-4C	1-2/C #14, 600V, EPR Insulation
						2204-2	1-3/C + gnd #14, 600V, EPR Insulation
						2204-1	1-3/C #14, 600V, EPR Insulation
						2204-9	1-3/C #14, 600V, EPR Insulation
						2204-10	1-3/C #14, 600V, EPR Insulation
						2204-11	1-3/C #14, 600V, EPR Insulation
9057A	E-264A	78	Liquidtight flex metal conduit	477.52	1928.98	2910-12	4 pair #22, shielded pairs, 300V, PE insulation
						2910-8	4 pair #22, shielded pairs, 300V, PE insulation
						2910-7	4 pair #24, overall shielded, 300V, PE insulation
						2119-2	4 pair #22, shielded pairs, 300V, PE insulation
						2900-292A	4 pair #22, shielded pairs, FEP insulation
						2910-11	1-3/C #16, 600V, EPR Insulation
9057B	E-264A	78	Liquidtight flex metal conduit	477.52	1928.98	2910-12	4 pair #22, shielded pairs, 300V, PE insulation
						2910-8	4 pair #22, shielded pairs, 300V, PE insulation
						2910-7	4 pair #24, overall shielded, 300V, PE insulation
						2119-2	4 pair #22, shielded pairs, 300V, PE insulation
						2900-292A	4 pair #22, shielded pairs, FEP insulation
						2910-11	1-3/C #16, 600V, EPR Insulation
9057C	E-366	21	RGS - PVC coated conduit	0.00	187.69	Pull rope	Soft-fiber polyester

CONDUIT AND TRAY SCHEDULE E-449C

STATE OF CALIFORNIA - DEPARTMENT OF TRANSPORTATION
Caltrans

DESIGN OVERSIGHT: BEHZAD GOLEMOHAMMADI

CALCULATED/DESIGNED BY	EJL	DATE 3/04	REVISED BY
CHECKED BY	JE	3/04	DATE REVISED

LAST REVISION 12-21-11 | DATE PLOTTED => 2/29/2012 | TIME PLOTTED => 11:18:14 AM

FOR REDUCED PLANS ORIGINAL SCALE IS IN MILLIMETERS 0 20 40 60 80

DGN FILE =>I:\13103\MS\pse\SAS Struc\CCO\SAS CCO190 (Elev 53)\2-29-20 | USERNAME =>garciar | 2 DRAFT 1\04-0120f1_0407R07.dgn | CU 04251 | EA 0120F1