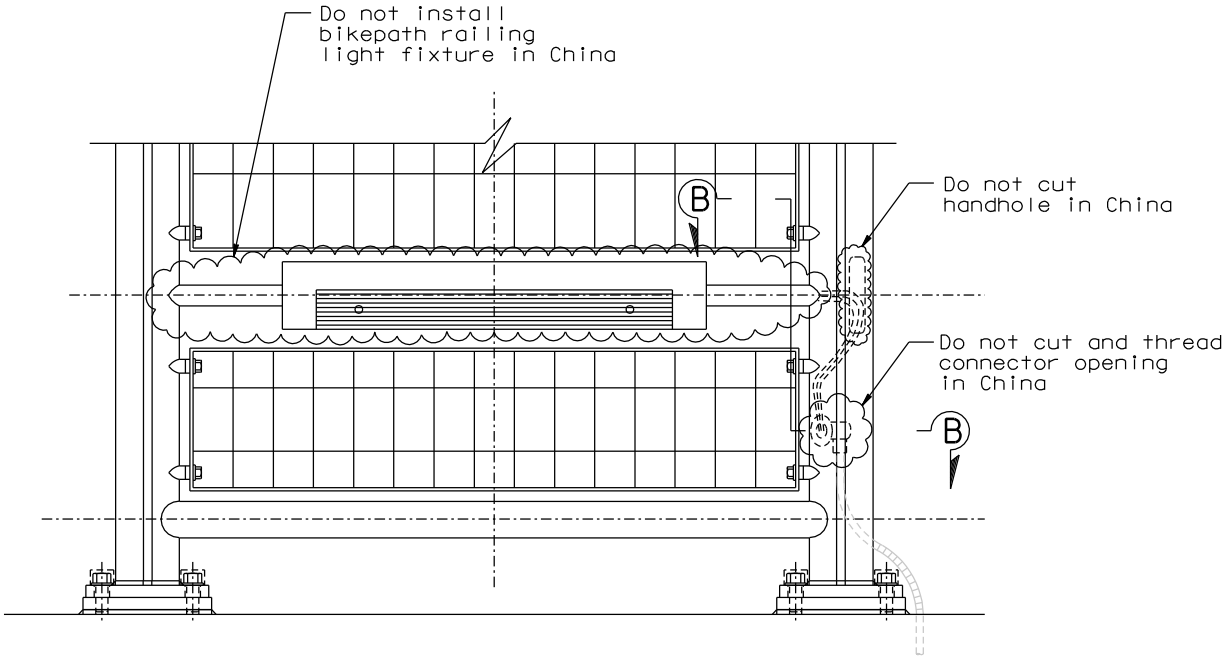

RAILING ELEVATION

1:5

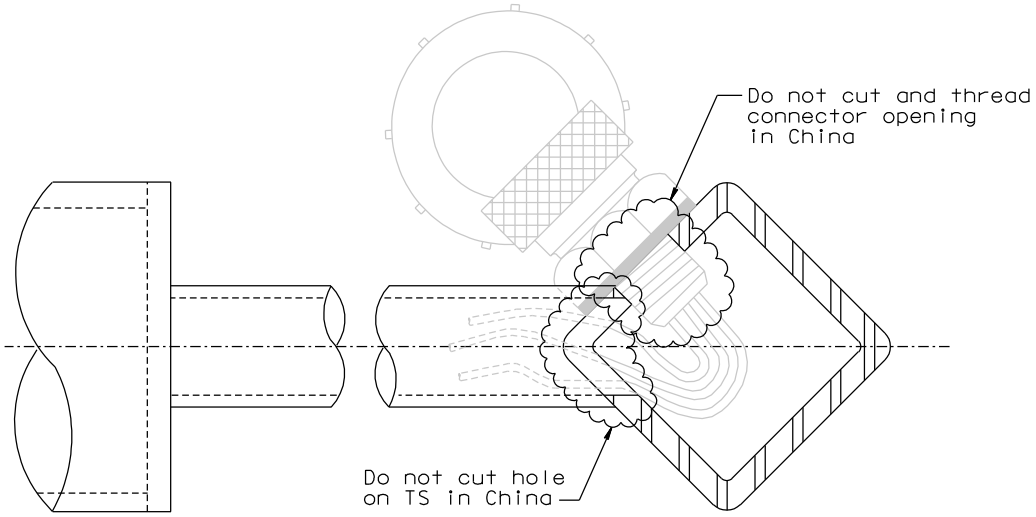

SECTION B-B

1:1