DIST	COUNTY	ROUTE	KILOMETER POST TOTAL PROJECT	SHEET NO.	TOTAL SHEETS
04	SF	80	13.2/13.9	213S1	1204

Caltrans Metric

REGISTERED ENGINEER-CIVIL

04-01-11

PLANS APPROVAL DATE

REGISTERED PROFESSIONAL ENGINEER T. W. SPARKS No. E16039 Exp. 9-30-11 ELECTRICAL STATE OF CALIFORNIA

The State of California or its officers or agents shall not be responsible for the accuracy or completeness of electronic copies of this plan sheet.

T.Y. LIN / MOFFATT & NICHOL
825 BATTERY STREET
SAN FRANCISCO, CA 94111

Caltrans now has a web site! To get to the web site, go to: http://www.dot.ca.gov

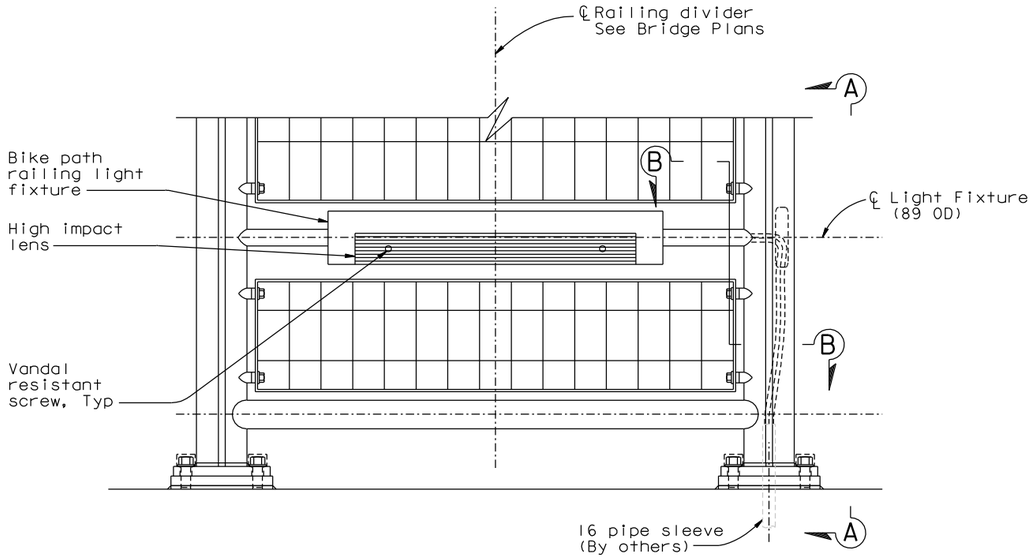

SOUTH RAILING ELEVATION (Looking South)
1:5

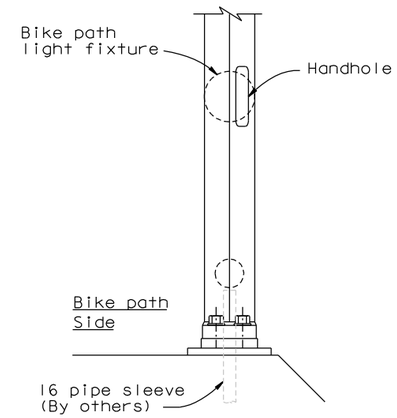

SECTION A-A
1:5

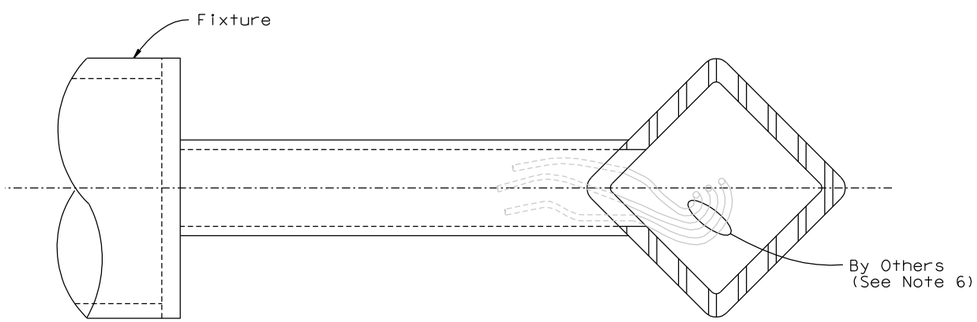

SECTION B-B
1:1

NOTES:

1. For Details not shown, see "Typical Bikepath Plans and Sections" sheets in the Roadway Plans.

CONTRACT CHANGE ORDER NO. _____
SHEET ____ OF ____

REQUESTS FOR INFORMATION NOT ADDRESSED IN THIS CCO REMAIN IN FORCE

MARK	DATE	DESCRIPTIONS	BY	CH'D	CCO#
0	04/01/11	BIKEPATH CONDUIT	TS	JB	189

REVISIONS

DETAILS
SAS SUPERSTRUCTURE ROADWAY EASTBOUND
TYPICAL BIKE PATH LIGHTING

SCALE AS NOTED

ALL DIMENSIONS ARE IN MILLIMETERS UNLESS OTHERWISE SHOWN.

E-172A

SAS STRUCTURE

STATE OF CALIFORNIA - DEPARTMENT OF TRANSPORTATION

Caltrans

DESIGN OVERSIGHT: BOB ZANDIPOUR

CALCULATED/DESIGNED BY: GAM DATE 10/00

CHECKED BY: TYL 10/00

REVISED BY

DATE REVISED

LAST REVISION 04-19-00

DATE PLOTTED => 01 APR 2011
TIME PLOTTED => 08:38:02

FOR REDUCED PLANS ORIGINAL SCALE IN MILLIMETERS 0 20 40 60 80

FILE => I:\bb\04-012001\sas\contract plans and cco\cco\cco#189\2-revision 04-01-11\dgn\40120fual72a.dgn
USERNAME => PTom

CU 04251

EA 0120F1