DIST	COUNTY	ROUTE	KILOMETER POST TOTAL PROJECT	SHEET NO.	TOTAL SHEETS
04	SF	80	13.2/13.9	213R4	1204

REGISTERED ENGINEER-CIVIL

12-6-04
PLANS APPROVAL DATE

REGISTERED PROFESSIONAL ENGINEER T. W. SPARKS No. E16039 Exp. 9-30-11 ELECTRICAL STATE OF CALIFORNIA

The State of California or its officers or agents shall not be responsible for the accuracy or completeness of electronic copies of this plan sheet.

T.Y. LIN / MOFFATT & NICHOL
825 BATTERY STREET
SAN FRANCISCO, CA 94111

Caltrans now has a web site! To get to the web site, go to: http://www.dot.ca.gov

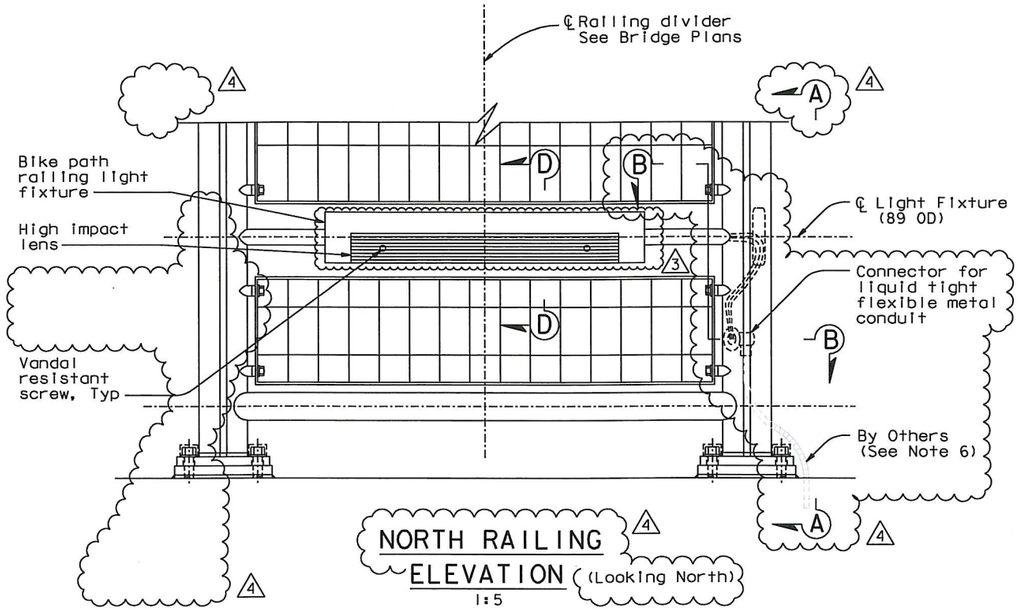

NORTH RAILING ELEVATION (Looking North)
1:5

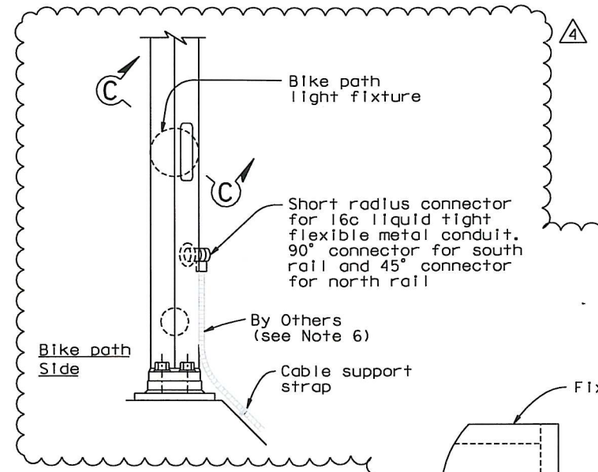

SECTION A-A
1:5

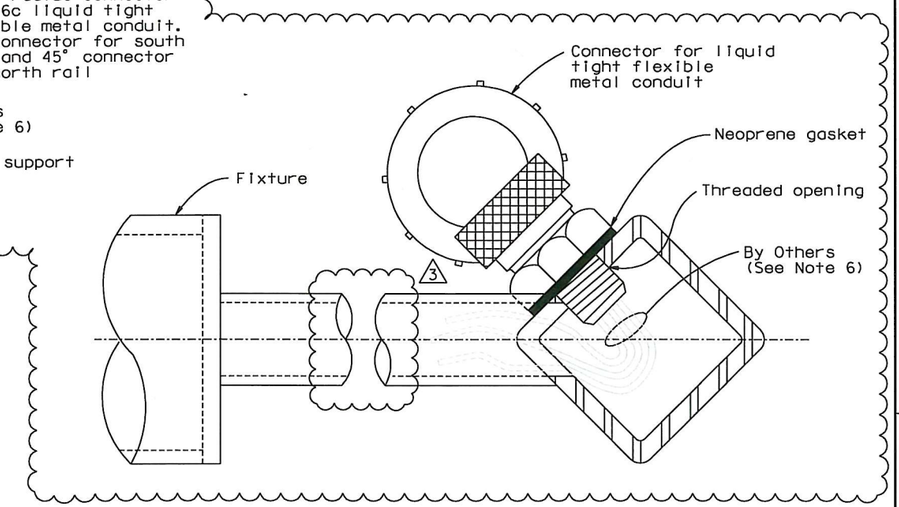

SECTION B-B
1:1

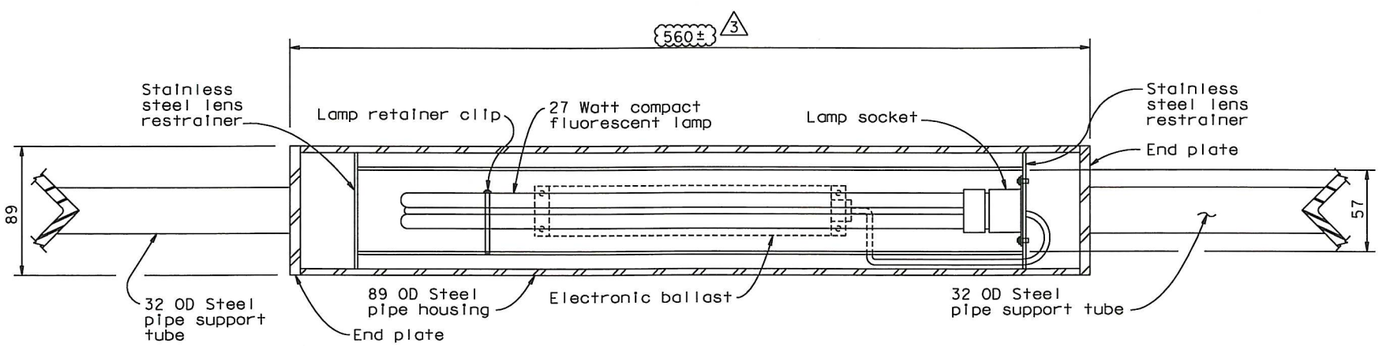

SECTION C-C
1:2

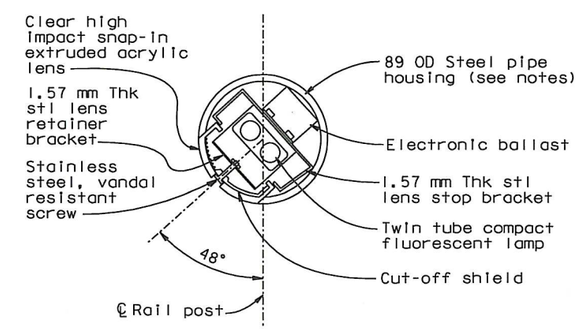

SECTION D-D
1:2

NOTES:

1. All metal (Except stainless steel) parts of railing light assembly shall be coated, see special provisions.
2. Refer to structural plans for railing details.
3. Light fixtures shall be parallel to top of bike path.
4. Light fixture support tube shall be welded to vertical posts.
5. All exposed welds shall be ground smooth.
6. For Details not shown, see "Typical Bikepath Plans and Sections" sheets in the Roadway Plans.

CONTRACT CHANGE ORDER NO. 189
SHEET 2 OF 3

REQUESTS FOR INFORMATION NOT ADDRESSED IN THIS CCO REMAIN IN FORCE

MARK	DATE	DESCRIPTIONS	BY	CH'D	CCO#
4	04/01/11	BIKEPATH CONDUIT	TS	JB	189
3	03/08/11	DIVIDER RAIL LIGHT HOUSING	TS	JB	189
2	05/07/10	BIKEPATH CONDUIT	TS	JB	73
1	08/28/09	BIKEPATH DETAILS	TS	JB	99

REVISIONS

DETAILS
SAS SUPERSTRUCTURE ROADWAY EASTBOUND
TYPICAL BIKE PATH LIGHTING

SCALE AS NOTED

ALL DIMENSIONS ARE IN MILLIMETERS UNLESS OTHERWISE SHOWN.

E-172

CALCULATED/DESIGNED BY	GAM	DATE 10/00	REVISED BY	DATE REVISED
CHECKED BY	TYL	10/00		

DESIGN OVERSIGHT: BOB ZANDIPOUR

STATE OF CALIFORNIA - DEPARTMENT OF TRANSPORTATION
Caltrans

SAS STRUCTURE

LAST REVISION 04-19-00 | DATE PLOTTED => 01 APR 2011 | TIME PLOTTED => 08:37:08

FOR REDUCED PLANS ORIGINAL SCALE IN MILLIMETERS 0 20 40 60 80

FILE => I:\bb\04-012001\sas\contract plans and cco\cco\cco#189\2-revision 04-01-11\dgn\40120fua172.dgn
USERNAME => PTom

CU 04251 | EA 0120F1

DIST	COUNTY	ROUTE	KILOMETER POST TOTAL PROJECT	SHEET NO.	TOTAL SHEETS
04	SF	80	13.2/13.9	21351	1204

REGISTERED ENGINEER-CIVIL

04-01-11

PLANS APPROVAL DATE

REGISTERED PROFESSIONAL ENGINEER T. W. SPARKS No. E16039 Exp. 9-30-11 ELECTRICAL STATE OF CALIFORNIA

The State of California or its officers or agents shall not be responsible for the accuracy or completeness of electronic copies of this plan sheet.

T.Y. LIN / MOFFATT & NICHOL
825 BATTERY STREET
SAN FRANCISCO, CA 94111

Caltrans now has a web site! To get to the web site, go to: http://www.dot.ca.gov

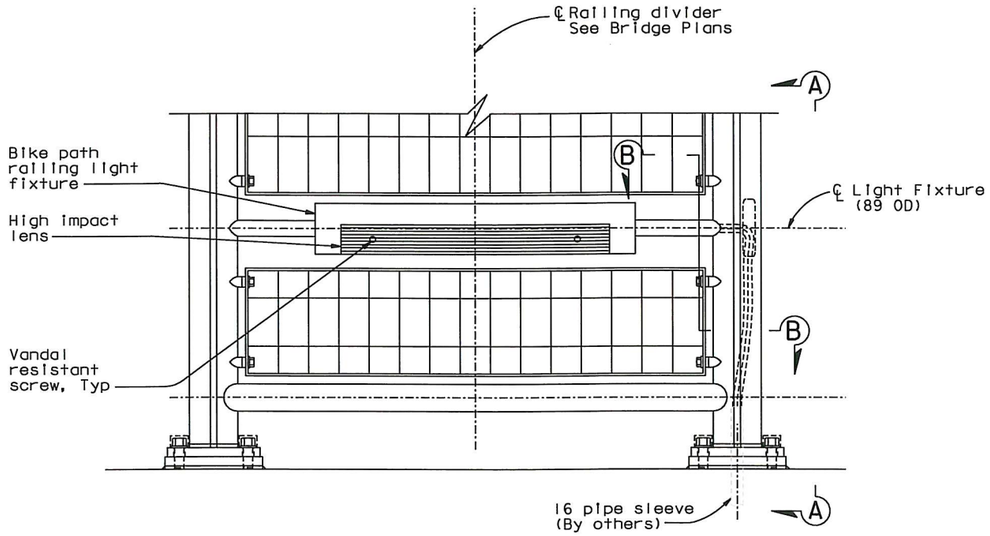

SOUTH RAILING
ELEVATION (Looking South)
1:5

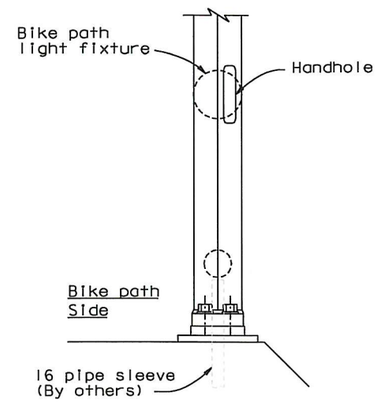

SECTION A-A
1:5

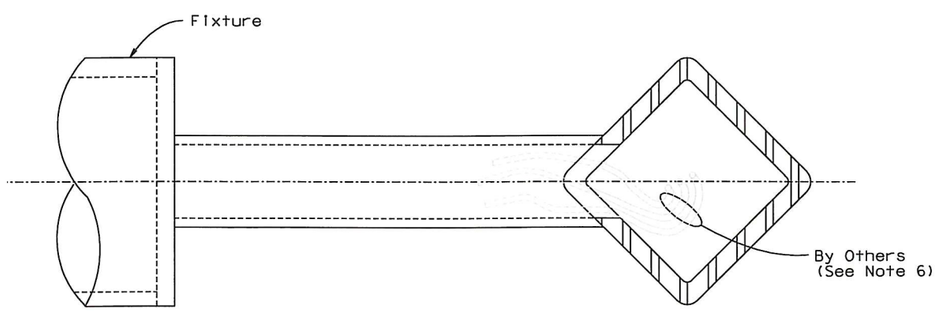

SECTION B-B
1:1

NOTES:

1. For Details not shown, see "Typical Bikepath Plans and Sections" sheets in the Roadway Plans.

CONTRACT CHANGE ORDER NO. 189
SHEET 3 OF 3

REQUESTS FOR INFORMATION NOT ADDRESSED IN THIS CCO REMAIN IN FORCE

MARK	DATE	DESCRIPTIONS	BY	CH'D	CCO#
0	04/01/11	BIKEPATH CONDUIT	TS	JB	189

REVISIONS

DETAILS
SAS SUPERSTRUCTURE ROADWAY EASTBOUND
TYPICAL BIKE PATH LIGHTING

SCALE AS NOTED

ALL DIMENSIONS ARE IN MILLIMETERS UNLESS OTHERWISE SHOWN.

E-172A

CALCULATED/ DESIGNED BY	GAM	DATE 10/00	REVISED BY	DATE REVISED
CHECKED BY	TYL	10/00		

DESIGN OVERSIGHT
BOB ZANDIPOUR

SAS STRUCTURE

STATE OF CALIFORNIA - DEPARTMENT OF TRANSPORTATION

Caltrans

FOR REDUCED PLANS ORIGINAL SCALE IN MILLIMETERS 0 20 40 60 80

FILE => I:\bb\04-012001\sas\contract plans and cco\cco\cco#189\2-revision 04-01-11\dgn\40120fual72a.dgn
USERNAME => PTom

CU 04251 EA 0F20F1

LAST REVISION 04-19-00
DATE PLOTTED => 01 APR 2011
TIME PLOTTED => 08:38:02