DIST.	COUNTY	ROUTE	KILOMETER POST TOTAL PROJECT	SHEET NO.	TOTAL SHEETS
04	SF	80	13.2/13.9	955SIR3	1204

REGISTERED ENGINEER - CIVIL

03-25-11

PLANS APPROVAL DATE

REGISTERED PROFESSIONAL ENGINEER James P. Duxbury No. C 64677 Exp. 06/30/13 CIVIL STATE OF CALIFORNIA

The State of California or its officers or agents shall not be responsible for the accuracy or completeness of electronic copies of this plan sheet.

T.Y. LIN / MOFFATT & NICHOL
825 BATTERY STREET
SAN FRANCISCO, CA 94111

Caltrans now has a web site! To get to the web site, go to: http://www.dot.ca.gov

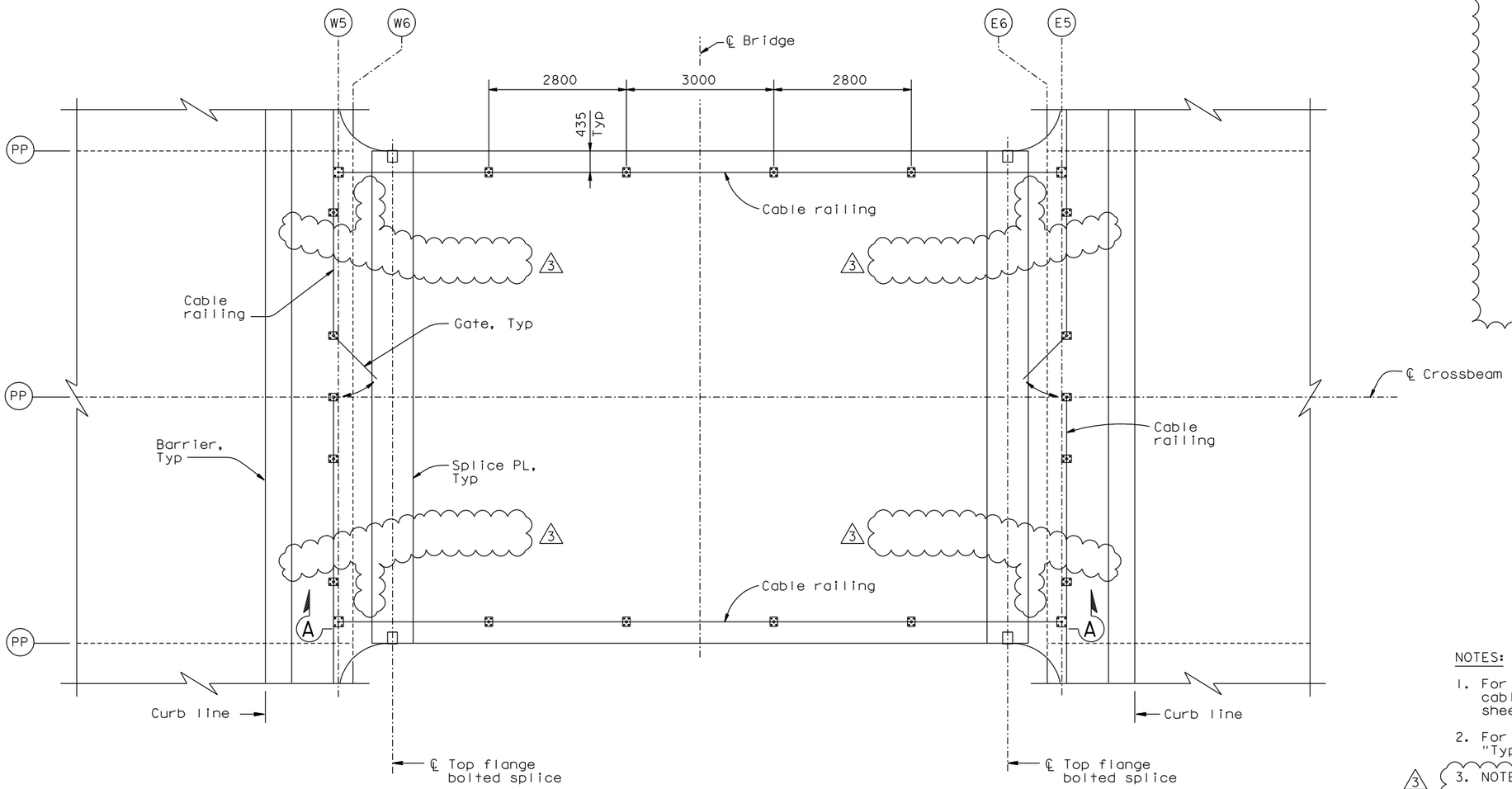

CROSSBEAM CABLE RAILING
ALTERNATE PLAN
1:50

NOTES:

1. For details of railing posts, struts, cables and cable hardware, see "Typical Girder Details No. 17A" sheet.
2. For cable railing base plate details, see "Typical Girder Details No. 12A" sheet.
3. NOTE DELETED.
4. For Section A-A, see "Crossbeam Access Details No. 3E" sheet.

CONTRACT CHANGE ORDER NO. ____
SHEET ____ OF ____

REQUESTS FOR INFORMATION NOT ADDRESSED IN THIS CCO REMAIN IN FORCE

MARK	DATE	DESCRIPTIONS	BY	CH'D	CCO#
3	05/03/12	CABLE RAILING	DT	JD	188
2	11/16/11	CABLE RAILING	DT	JD	188
1	04/22/11	W2-OBG SAFETY CABLE	CC	JD	188
0	03/25/11	W2-OBG SAFETY CABLE	CC	JD	188

REVISIONS

R. Valizadeh/V. Toan/Y.L./W.L./F.C.
DESIGN OVERSIGHT
Ryan Valizadeh / Vong Toan / Y. Liu
SIGN OFF DATE 05/03/12

	BY	CHECKED
DESIGN	C. Choi	J. Duxbury
DETAILS	L. Motal	D. Turner
QUANTITIES	L. Motal	D. Turner

PREPARED FOR THE STATE OF CALIFORNIA DEPARTMENT OF TRANSPORTATION

ALL DIMENSIONS ARE IN MILLIMETERS UNLESS OTHERWISE SHOWN

R. Manzanarez
PROJECT ENGINEER

BRIDGE NO. 34-0006L/R
KILOMETER POST 13.2/13.9

SAN FRANCISCO OAKLAND BAY BRIDGE
EAST SPAN SEISMIC SAFETY PROJECT
SELF-ANCHORED SUSPENSION BRIDGE
(SUPERSTRUCTURE & TOWER)

CROSSBEAM ACCESS DETAILS NO. 3A

Rev. Date: 5-18-98

ORIGINAL SCALE IN MILLIMETERS FOR REDUCED PLANS 0 10 20 30 40 50 60 70 80 90 100

CU 04
EA 0120F1

DISREGARD PRINTS BEARING EARLIER REVISION DATES 03/25/11

REVISION DATES (PRELIMINARY STAGE ONLY)

SHEET 538SIR3 OF

FILE => I:\bb\04-012001\sas\contract plans and cco\cco\cco#188\6-revision 05-03-12\dgn\akcad03a.dgn

100% PS&E

USERNAME => DWinrow DATE PLOTTED => 03 MAY 2012 TIME PLOTTED => 14:41:25